SPECIFICATIONS FOR THE NI PXI-5660 RF SIGNAL ANALYZER

These specifications are warranted at 0 to 50˚C ambient unless otherwise specified, and include a 20-minute warm-up time from ambient conditions.

General Specifications

Number of channels 1
Input impedance .....50 ohms
Coupling .....AC
Warm-up time .....20 minutes

Frequency Specifications

Frequency range.....9 kHz to 2.7 GHz
Real time bandwidth .....20 MHz
Hardware tuning resolution.....0.015 Hz
Resolution bandwidth .....arbitrary (< 1 Hz to 10 MHz)

Tuning Speed (15 to 35˚C)

Accuracy Settling time

1% of step size .....< 10 ms
0.01% of step size .....< 20 ms
1 ppm of step size .....< 30 ms

Internal Reference

Frequency .....10 MHz
Initial accuracy .....±50 ppb
Locking range .....> ±0.5 ppm
Lock time to external reference .....< 10 s
Aging Per day.....±1 ppb after 72 hours
Per year.....±100 ppb max
Temperature stability .....±20 ppb max (referenced to 25 ºC)

Spectral Purity (15 ˚ to 35 ˚C) **Carrier Phase Noise**

Spurious Responses

Residual Spurs (no input signal, 0 dB attn.)
> 5 MHz.....< –100 dBm
< 5 MHz.....< –70 dBm

Input-Related Spurs (–30 dBm input signal, 0 dB attn.)

= 5 MHz.....–70 dBc
< 5 MHz.....–60 dBc
Sideband Spurs (> 20 kHz).....< –70 dBc
Residual FM .....< 10 Hz pk-pk in 10 ms

Offset Frequency Noise Density

1 kHz	.....< –80 dBc/Hz
10 kHz	.....< –90 dBc/Hz
30 kHz	.....< –95 dBc/Hz
100 kHz	.....< –110 dBc/Hz
1 MHz	.....< –120 dBc/Hz

Amplitude Specifications

Input Range Amplitude..... ..... < –130 dBm to +30 dBm

Maximum safe input levels

Continuous RF power
With attenuation ..... +30 dBm
Without attenuation ..... +20 dBm
DC input..... 0 VDC1
Input attenuation ..... 0 to 50 dB in 10 dB steps

Accuracy with calibration correction from 15 ºC to 35 ºC
Relative to 100 MHz..... ±0.5 dB
Absolute accuracy
> –50 dBm ..... ±0.75 dB
< –50 dBm ..... ±1.25 dB

Phase Linearity

Group delay variation (15 ºC to 35 ºC)
Real time bandwidth ..... ±15 ns

Dynamic Range

Compression-to-Noise Dynamic Range

1. DC levels up to ±25 VDC at input will not damage the RFSA. However, high transient currents from low impedance DC step voltages at input can cause damage.
2. 1 Hz Resolution Bandwidth

Frequency Compression-Noise DR

10 MHz to 1.0 GHz	.....> 135 dB
1GHz to 2 GHz	.....> 136 dB
2 GHz to 2.7 GHz	.....> 134 dB

Second Harmonic Distortion Dynamic Range[1]
Intermodulation Distortion (SFDR) Dynamic Range[1]
[1] mixer level= -30 dBm

Frequency Distortion DR
10 MHz to 500 MHz .....> 92 dB
500 MHz to 1.35 GHz .....> 90 dB

Frequency Intermodulation DR
10 MHz to 1 GHz .....> 96 dB
1 GHz to 2 GHz ..... > 97 dB
2 GHz to 2.7 GHz .....> 95 dB

Typical Dynamic Range (1 kHz Resolution Bandwidth)

Linearity
Mixer 1 dB Gain Compression Point

Frequency 1 dB Compression Point
10 MHz to 1 GHz .....> 0 dBm
1 GHz to 2 GHz .....> 2 dBm
2 GHz to 2.7 GHz .....> 4 dBm

Second-Order Harmonic Distortion (Input IIP2 [1]
Third-Order Intermodulation Distortion (Input IIP3)[1] .....(two –30 dBm tones, = 200 kHz apart)

Average Noise Level Input Characteristics

Nominal impedance.....50
Connector type.....SMA
DC input .....0 VDC
[1] mixer level= 30 dBm

Input Signal Distortion Mixer Input IIP2
10 MHz to 500 MHz .....< –82 dBc > 52 dBm
500MHz to 1.35 GHz .....< –80 dBc > 50 dBm

Input Signal Distortion Mixer Input IP3
10 MHz to 1 GHz .....< –80 dBc > 10 dBm
1 GHz to 2 GHz .....< –84 dBc > 12 dBm

2 GHz to 2.7 GHz .....< –86 dBc > 13 dBm

Frequency Noise Level
20 MHz to 1 GHz .....< –135 dBm/Hz> (–140 dBm/Hz typical)
1 GHz to 2 GHz .....< –134 dBm/Hz>(–137 dBm/Hz typical)
2 GHz to 2.5 GHz .....< –130 dBm/Hz>(–135 dBm/Hz typical)
2.5 GHz to 2.7 GHz .....< –129 dBm/Hz>(–132 dBm/Hz typical)

VSWR

Environmental Specifications with 20 minute Warm up time
Operating environment
Ambient temperature ..... 0 to 50 ˚C
Humidity ..... 10 to 90%, noncondensing
Storage environment
Storage temperature ..... –20 to 70 ˚C
Humidity ..... 5 to 95%, noncondensing
Maximum altitude ..... 2,000 meters
Pollution degree 2
Indoor use only

Calibration Interval ..... 1 year

Typical Power Requirements
PXI-5600, ±5% ..... 800 mA @ +3.3 VDC
.....2.0 A @ +5 VDC
.....650 mA @ +12 VDC
.....100 mA @ –12 VDC

PXI-5620, ±5% ..... 400 mA @ +3.3 VDC
.....1 A @ +5 VDC
.....330 mA @ +12 VDC
.....24 mA @ –12 VDC

Maximum Working Voltage Input to earth ..... 0 VDC, Installation Category I

Mode Frequency VSWR
With Attenuation 9 kHz – 2.2 GHz ..... < 1.3
2.2 GHz – 2.7 GHz .....< 1.5
Without Attenuation 9 kHz – 2.2 GHz .....< 1.6
2.2 GHz – 2.7 GHz .....< 2.5

Safety
Meets the requirements of the following standards for safety for electrical equipment for measurement, control, and laboratory use:

• EN 61010-1:1993/A2:1995, IEC 61010-1:1990/A2:1995,
• UL 3101-1:1993, UL 3111-1:1994, UL 3121:1998,
• CAN/CSA c22.2 no. 1010.1:1992/A2:1997.

Electromagnetic Compatibility
CE, C-Tick, and FCC Part 15 (Class A) Compliant
Electrical emissions .....EN 55011 Class A at 10 m FCC Part 15A above 1 GHz
Electrical immunity .....Evaluated to EN 61326:1997/A1:1998, Table 1

Note : For full EMC compliance, you must operate this device with shielded cabling. In addition, all covers and filler panels must be installed. Refer to the Declaration of Conformity (DoC) for this product for any additional regulatory compliance information. To obtain the DoC for this product, click Declaration of Conformity at ni.com/hardref.nsf/. This Web site lists the DoCs by product family. Select the appropriate product family, followed by your product, and a link to the DoC in Adobe Acrobat format appears. Click the Acrobat icon to download or read the DoC.

Dimensions
PXI-5600 (3 PXI slots) .....10 by 16 by 6.1 cm (3.9 by 6.3 by 2.4 in)
PXI-5620 (1 PXI slot).....10 by 16 by 2.0 cm (3.9 by 6.3 by 0.8 in)

Certifications and Compliances ..... CE Mark Compliance or Equivalent

Conductive Immunity
When tested as specified in EN 61000-4-6 at 3 V, the spurious response will be within specifications except at the test frequency.

A spurious signal of up to –45 dBm can appear at the test frequency.

Sample list of equipment that may be needed for a NI-PXI Signal Analyser (consult with manufacturer's representatives:

778282-02	NI PXI-5620 14 bit, 64MB, 64MS/s Freq. Domain Digitizer & Bonus SW
778303-01	PXI-1006, 18-slot 3U Chassis with Universal AC Power Supply
778132-01	MXI-3 PCI/Compact PCI Kit w/Fiber Optic Cabling
778302-01	PXI-1006 Mount Kit
778492-01	External USB CD ROM for use with PXI & VXI Embedded Controllers
777987-01	NI 2590 for PXI, Radio Frequency (RF) Switch

778469-512	512 MB RAM for NI-8171 Serie778469-512 (512 MB RAM for NI-8171 Series
778468-01	NI 8176, 1.26 Ghz PXI Embedded Controller with Windows 2000
960596-01	PXI System

National Instruments URL http://www.ni.com/

The NI-PXI 5660 general capabilities are provided below.

- I/Q Data
- Zoom Power Spectrum
- Avg Power Spectrum
- Spectrum Peak Search
- Peak Frequency
- Peak Amplitude/Power
- Avg Frequency Response
- Power in Band
- Adjacent Channel Power
- Occupied Bandwidth
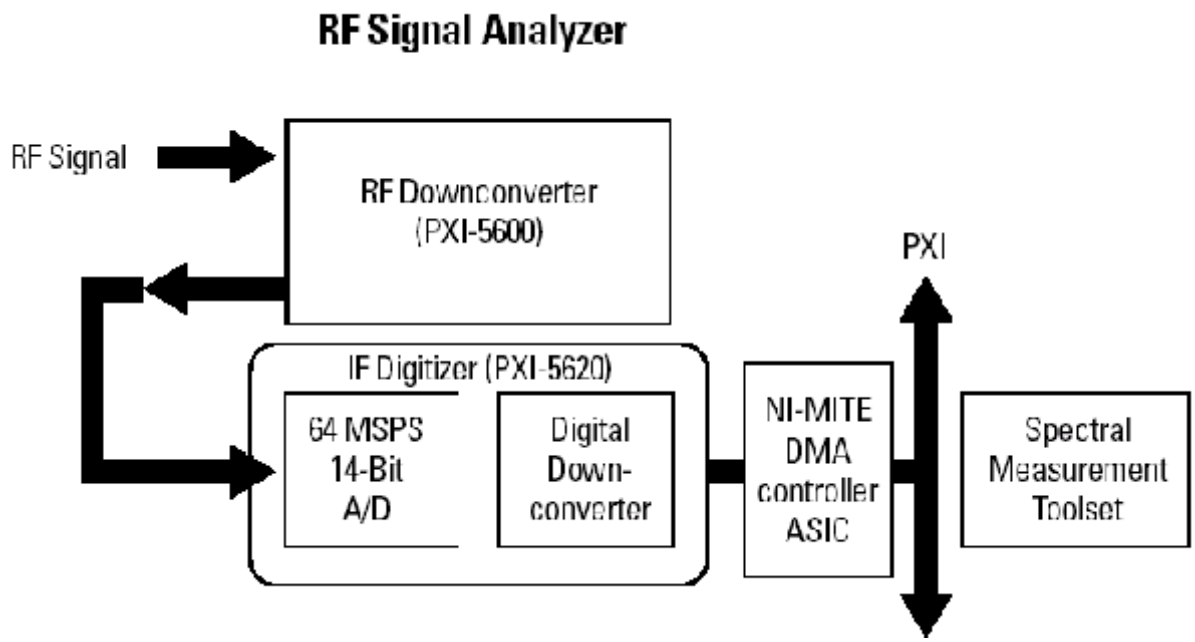
A block diagram of the PXI-5660 is shown below.