NOAA/NESDIS
OSD Series
G023

NOAA-GOES/OSD-2000-0036R2
March 25, 2011

Geostationary Operational Environmental Satellite (GOES)

Operations Ground Equipment (OGE) Interface Specification

DRL 504-02, Part 1

Revision 2

March 2011

Prepared by:

U.S. Department of Commerce
National Oceanic and Atmospheric Administration (NOAA)
National Environmental Satellite, Data, and Information Service (NESDIS)

NOAA/NESDIS
OSD Series
G023

NOAA-GOES/OSD-2000-0036R2
March 25, 2011

GOES Operations Ground Equipment (OGE) Interface Specification

504-02, Part 1

Revision 2

March 2011

Prepared by:

U.S. Department of Commerce
National Oceanic and Atmospheric Administration (NOAA)
National Environmental Satellite, Data, and Information Service (NESDIS)

Approval Page
(eApproval by eMail)

Document Numbers:	
NOAA/NESDIS **OSD Series** **G023**	**NOAA-GOES/OSD-2000-0036R2** **March 25, 2011**

Document Title Block:

GOES Operations Ground Equipment (OGE) Interface Specification

DRL 504-02, Part 1
Revision 2

PROGRAM: Geostationary Operational Environmental Satellite (GOES)	**DOCUMENT RELEASE DATE**: March 25, 2011
APPROVALS	
GROUP: Office of Systems Development (OSD) / GOES Approved by eMail on March 29, 2011. NAME: Keith McKenzie, GOES Project Manager	GROUP: Office of Satellite and Product Operations (OSPO) / Systems Branch Approved by eMail on March 29, 2011. NAME: Diane Robinson, GOES Software Lead
GROUP: Office of Satellite and Product Operations (OSPO) / Systems Branch Approved by eMail on March 29, 2011. NAME: Mike Baker, CWS Lead	GROUP: Office of Satellite and Product Operations (OSPO) / WCDAS Approved by eMail on March 28, 2011. NAME: Steve Atkins, WCDAS SPS Manager
GROUP: Office of Satellite and Product Operations (OSPO) / Systems Branch Approved by eMail on April 5, 2010. NAME: Alex Pozniak, RPM Lead	
CMO RELEASE APPROVAL: Approved by eMail on March 23, 2011. NAME: Stephen P. Adamson, Welkin Assoc., Ltd., CMO Manager	

Version Description Record

DOCUMENT TITLE:
GOES Operations Ground Equipment (OGE) Interface Specification, DRL 504-02, Part 1, Revision 2

DOCUMENT CHANGE HISTORY		
Revision	Date	Description of Change
R0	Aug. 22, 1997	Initial draft.
R0	Jun. 30, 2000	Change pages.
R1	Oct. 21, 2005	DocCCR-GOES-OGE-2001-0005 DocCCR-GOES-OGE-2001-0006 DocCCR-GOES-OGE-2001-0008 DocCCR-GOES-OGE-2002-0009 DocCCR-GOES-OGE-2002-0010 DocCCR-GOES-OGE-2002-0011 DocCCR-DocCCR-GOES-OGE-2004-0016 DocCCR-GOES-SPS-2004-0020 DocCCR-GOES-OGE-2005-0018
R2	Mar. 25, 2011	DocCCR-GOES-OGE-2006-0020 DocCCR-GOES-GVAR-2009-0001

Preface

This document comprises Revision 2 of National Oceanic and Atmospheric Administration (NOAA) National Environmental Satellite, Data, and Information Service (NESDIS) baseline publication of the *GOES Operations Ground System (OGE) Interface Specification, 504-02, Part 1* (document number NOAA-GOES/OSD-2000-0036R2, March 25, 2011, issue). This version supersedes all previous versions of this document as well as the *GOES N-Q SSGS (Spacecraft Support Ground System) Interface Specification Document* dated October 2007.

The purpose of this document is to provide a definition of the GOES OGE components' interfaces to external systems at the NOAA Command and Data Acquisition Stations (CDAS) at Wallops Island, Virginia (WCDAS), Fairbanks, Alaska (FCDAS), the Wallops Backup CDAS (WBU) at the Goddard Space Flight Center (GSFC), and the Satellite Operations and Control Center (SOCC) in the NOAA Satellite Operations Facility (NSOF) at Suitland, Maryland, of both the GOES I-M and GOES-NOP spacecraft and ground systems. If information is specific to either system, it is delineated in the text.

Furthermore, Revision 2 provides users with the information required to update their ingest systems. Modifications include: GOES Variable Format (GVAR) changes due to GOES-NOP and to the GVAR transmission format implemented in Sensor Processing System (SPS) Release 8.6.

NOAA/NESDIS acknowledges the efforts of personnel from Office of Satellite and Product Operations (OSPO) Systems Branch and from Welkin Associates, Ltd. (contract number GS09K99BHD0003/NI330080754/GST1108BJ6035) in the preparation of this document. NOAA/NESDIS also acknowledges staff from Lockheed Martin Mission Engineering and Ground Operations (LM/MEGO), Swales Aerospace, Computer Sciences Corporation (CSC), as well as Integral Systems, Inc. (ISI), and SS/L for their support in preparing the previous version of this document (dated October 21, 2005).

Future revisions to this document will be produced and controlled by NOAA/NESDIS. If you have changes to this document, download the Microsoft Word file of this publication from the SATOPS OSD/OSPO eLibrary and use it as the basis for the next version without exception. Track changes must be turned on to identify all changes specified in related DocCCRs.

The publication of this baseline document closes Document Configuration Change Requests (DocCCRs) DocCCR-GOES-GVAR-2009-0001 and DocCCR-GOES-OGE-2006-0020.

Table of Contents

Section 1.0 Introduction 1-1
1.1 Scope 1-1
1.2 Background 1-1
1.2.1 GOES I-M System Description (GIMTACS) 1-2
1.2.1.1 SPS 1-5
1.2.1.2 PM 1-6
1.2.1.3 OATS 1-6
1.2.2 GOES N-P System Description (SSGS) 1-7
1.2.2.1 Mission Overview 1-7
1.2.2.2 SSGS Overview 1-8
1.2.2.3 NTACTS 1-13
1.2.2.4 GTACS 1-13
1.2.2.5 OATS 1-14
1.2.2.6 MRS&S 1-16
1.2.2.7 DID 1-17
1.2.2.8 SPS 1-17
1.2.2.9 RPM 1-18
1.2.3 eXtended GOES High Inclination (XGOHI) 1-18
1.2.4 Instrument and GVAR Format Background 1-19
1.3 External Interfaces 1-20
1.3.1 GOES I-M External Interfaces (GIMTACS) 1-20
1.3.2 GOES N-P External Interfaces (SSGS) 1-22
1.4 Document Contents 1-23
1.5 Referenced Documents 1-24
1.6 Document Maintenance 1-26

Section 2.0 OGE Electrical Interface Characteristics 2-1
2.1 Time Code Interface 2-1
2.1.1 Local Clock Synchronization Using NTP 2-1
2.2 Imager and Sounder Raw Instrument Data Downlink Interface 2-2
2.3 GVAR Uplink and Downlink Interface 2-2
2.4 GOES I-M Interfaces (GIMTACS) 2-3
2.4.1 GIMTACS Data Communications Interfaces 2-3
2.5 GOES N-P Interfaces (SSGS) 2-3
2.5.1 SSGS LAN/WAN Interface 2-3
2.5.2 GTACS Interfaces 2-3
2.5.2.1 GAS/GTACS Interface 2-4
2.5.2.2 DSN/GTACS Interface 2-5
2.5.2.2.1 PTP Interfaces 2-6
2.5.2.2.2 PTP Configuration 2-7
2.5.2.2.3 Data Received by the PTP from Nascom 2-9
2.5.2.2.4 Data Sent by the PTP to Nascom 2-10
2.5.2.2.5 Data Received by the PTP from GTACS 2-10

2.5.3 NTACTS Interfaces 2-11
2.5.3.1 Telemetry Downlink Interface 2-12
2.5.3.2 Command Uplink Interface 2-13
2.5.4 MRS&S External Interfaces 2-13
2.5.4.1 Physical Characteristics 2-13
2.5.4.2 MDL Data Format 2-14
2.5.5 OATS External Interfaces 2-18
2.5.6 Spacecraft Emulator Interfaces 2-18
2.5.6.1 BSE/NTACTS Interface 2-19
2.5.6.2 BSE/GTACS Interface 2-19
2.5.6.3 BSE/MRS&S Interface 2-19
2.5.6.4 BSE/SPS Interface 2-20
2.5.7 Telemetry and Commanding Project Database 2-20
2.5.8 RPM and SPS Interface 2-20
2.6 AC Power Connectors 2-20
2.7 CDA Range Calibration Transponder 2-21
2.8 OATS External Port 2-23
2.9 Digital Wideband Tape Recorder (DWTR) Interface 2-24

Section 3.0 GVAR Transmission Format 3-1
3.1 Introduction 3-1
3.1.1 Summary of Changes Across Versions of GVAR 3-1
3.2 Scan Format 3-2
3.2.1 Imager 3-5
3.2.2 Sounder 3-15
3.2.3 Yaw-Flipped Spacecraft GVAR Generation 3-17
3.2.3.1 Yaw-Flipped Imager 3-18
3.2.3.2 Yaw-Flipped Sounder 3-19
3.2.4 Block Sequencing 3-19
3.2.5 Bandwidth Considerations 3-21
3.2.6 Transmission Delays 3-26
3.2.7 Encoding 3-27
3.3 Block Format 3-28
3.3.1 Block Synchronization Code 3-28
3.3.2 Block Header 3-29
3.3.3 Block Cyclic Redundancy Check 3-32
3.3.4 Block 0 Data Section 3-32
3.3.4.1 Instrument and Scan Status 3-32
3.3.4.2 Instrument O&A Data 3-33
3.3.4.3 Scan Reference Data 3-33
3.3.4.4 Grid Data 3-33
3.3.4.5 Scan Reference and Calibration Data 3-34
3.3.4.6 Factory Parameters 3-34
3.3.4.7 XGOHI Parameters 3-34
3.3.4.8 Spacelook Auto-Detect Considerations 3-34
3.3.5 Blocks 1 and 2 – Imager IR Data 3-35

3.3.5.1 Line Documentation 3-54
3.3.5.2 IR Detector Data 3-55
3.3.6 Blocks 3–10 Imager Visible Data 3-55
3.3.6.1 Line Documentation 3-56
3.3.6.2 Visible Detector Data 3-57
3.3.7 Block 11 – Sounder and Auxiliary Data 3-57
3.3.7.1 SAD ID 3-58
3.3.7.2 Sounder Scan Documentation 3-61
3.3.7.2.1 Instrument and Scan Status 3-61
3.3.7.2.2 Sounder O&A Data 3-61
3.3.7.2.3 Factory Parameters 3-61
3.3.7.3 Sounder Scan Data 3-71
3.3.7.3.1 Sounder Data Records 3-72
3.3.7.3.2 Line and Pixel Index Arrays 3-74
3.3.7.3.3 Detector Data Arrays 3-77
3.3.7.4 Compensation and Servo Error Terms 3-78
3.3.7.5 Telemetry Statistics 3-81
3.3.7.6 Electronic Calibration Statistics and Data 3-88
3.3.7.7 Spacelook Calibration Statistics and Data 3-92
3.3.7.8 Blackbody Calibration Statistics and Data 3-105
3.3.7.9 Calibration Coefficients and Limits Format 3-115
3.3.7.10 Visible Detector NLUTs 3-136
3.3.7.11 Star Sense Statistics and Data 3-139
3.3.7.12 GIMTACS and SPS Text Message Format 3-143
3.3.7.13 Fill Data Format 3-144
3.3.7.14 Imager Factory Coefficients 3-144
3.4 Coordinate Systems 3-149
3.5 Bits, Words, and Formats 3-155
3.5.1 Bit Transmission Order 3-155
3.5.2 Longitudinal Parity (XOR) Words 3-155
3.5.3 Integer Formats 3-157
3.5.4 Floating Point Format 3-157
3.5.5 Sounder Raw Data Word Format 3-158
3.6 Visible and Infrared Channel Calibration 3-159
3.6.1 Visible Channel Processing 3-160
3.6.1.1 Relativization 3-160
3.6.1.2 Normalization 3-160
3.6.2 IR Calibration 3-161
3.6.2.1 Standard IR Calibration 3-163
3.6.2.2 Modifications to Correct for East-West Variation in Scan Mirror Reflectance 3-166
3.6.2.3 IR Calibration Extensions 3-168
3.6.2.3.1 IR Calibration – Bias Mode 2 (B-MODE = 2) (Sounder Only) .. 3-168
3.6.2.3.2 First-Order Gain Extensions (M-MODEs 2 - 14) 3-170
3.6.2.3.2.1 Mode 8 - Midnight Blackbody Calibration Correction (MBCC) - Imager Only 3-170
3.6.2.3.2.2 M-Modes 2 and 9 - Gain as a Function of Patch Temperature 3-172
3.6.2.3.2.3 M-Modes 3 and 10 - Diurnally Averaged Gain 3-173

3.6.2.3.2.4 M-Modes 4, 11 and 12 - Gain as a Function of Optics Temperatures ... 3-175
3.6.2.3.2.5 M-Mode 5 - Diurnally Averaged Gain as a Function of Optics Temperatures ... 3-176
3.6.2.3.2.6 M-Modes 6 and 13 - Gain as a Function of Time (Linear) ... 3-176
3.6.2.3.2.7 M-Modes 7 and 14 - Gain as a Function of Time (Quadratic) ... 3-177
3.6.2.3.3 Second-Order Gain Extensions ... 3-178
3.6.2.3.3.1 Second-Order Gain Versus Patch Temperature (Q-MODE = 2) ... 3-178
3.6.2.3.3.2 Second-Order Gain Versus Baseplate Temp (Q-MODE = 3) ... 3-178
3.6.3 ECAL Linearity Verification ... 3-179
3.7 Star Sense Analysis Algorithm ... 3-179
3.7.1 Problem Description ... 3-179
3.7.2 Analysis ... 3-180

Section 4.0 GIMTACS/SSGS-OGE Interface ... 4-1
4.1 Overview ... 4-1
4.2 GIMTACS/SSGS - OGE Communication Protocol Descriptions ... 4-2
4.2.1 Ethernet (IEEE 802.3) LAN ... 4-2
4.2.1.1 IEEE 802.3 Physical Layer ... 4-3
4.2.1.2 IEEE 802.3 Data Link Layer ... 4-3
4.2.1.2.1 IEEE 802.3 Medium Access Control Sublayer ... 4-3
4.2.1.2.2 IEEE 802.3 Logical Link Control (LLC) Sublayer ... 4-4
4.2.2 Internet Protocol Suite ... 4-5
4.2.2.1 Internet Protocol ... 4-6
4.2.2.2 Transmission Control Protocol (TCP) ... 4-8
4.2.2.3 User Datagram Protocol (UDP) ... 4-10
4.2.2.4 Higher Layer Protocols ... 4-10
4.2.2.4.1 SNMP ... 4-10
4.2.2.4.2 NFS ... 4-11
4.2.2.4.3 File Transfer Protocol ... 4-11
4.2.3 DECnet Protocol ... 4-11
4.3 Communication Messages ... 4-12
4.3.1 GOES N-P Unique Interfaces – No DRL 504-02 Heritage (SSGS) ... 4-12
4.3.1.1 GTACS/NTACTS ... 4-12
4.3.1.1.1 PCM Telemetry Data ... 4-13
4.3.1.1.2 NTACTS Status ... 4-15
4.3.1.1.3 Spacecraft Commanding ... 4-16
4.3.1.2 MRS&S/DID ... 4-16
4.3.2 Generic Message Format ... 4-17
4.3.2.1 Message Store and Forward ... 4-30
4.3.2.2 Coefficient Sets ... 4-31
4.3.2.2.1 IMC Set Identification ... 4-31
4.3.2.2.2 SMC Set Identification ... 4-32
4.3.2.2.3 SCC Set Identification ... 4-32
4.3.3 SPS-Originated Messages ... 4-33
4.3.4 MRS&S-Originated Messages ... 4-55
4.3.5 PM-Originated Messages ... 4-66

4.3.6 OATS-Originated Messages 4-82
4.3.7 GIMTACS/GTACS-Originated Messages 4-174
4.3.8 AGC-Originated Messages 4-250

Section 5.0 External Database, File Inputs, and Outputs 5-1
5.1 SPS 5-1
5.1.1 SPS Calibration and Navigation Database Disk 5-1
5.2 OATS 5-11
5.2.1 INR STAR Catalog Disk 5-11
5.2.2 Star Tracker Star Catalog 5-12
5.2.3 U.S. Naval Observatory Data Disk 5-12
5.2.4 OATS OPORT Files 5-15
5.2.5 OATS Database Disk 5-15
5.2.6 OATS O&A Disk 5-15
5.3 GIMTACS (GOES I-M) 5-16
5.3.1 AOCS Reprogrammability Disk 5-16
5.4 Telemetry & Command Project Database 5-18

Appendices

Appendix A. Abbreviations and Acronyms A-1

List of Figures

Figure 1-1. GOES Hardware Subsystem 1-3
Figure 1-2. SSGS Elements at the CDASs, SOCC, and SWPC 1-11
Figure 1-3. OGE External Interface High-Level Functional Diagram 1-21
Figure 1-4. SSGS Context Diagram 1-22
Figure 1-5. Network Fabric Diagram 1-23
Figure 2-1. GTACS Interface Diagram 2-4
Figure 2-2. GAS/GTACS Interface Diagram 2-5
Figure 2-3. PTP Interface Diagram 2-6
Figure 2-4. PTP Nascom Interface Connector Diagram 2-7
Figure 2-5. Nascom Telemetry Block Format 2-10
Figure 2-6. NTACTS Interfaces 2-11
Figure 2-7. MRS&S Interfaces 2-14
Figure 2-8. Packet Layout for Frame Synch, NT1694, NT2209, SXI Image Data, Instrument of Opportunity, and Fill Packet Types 2-15
Figure 2-9. Packet Layout for Imager Servo Error, Imager IMC Data, Sounder Servo Error, and AVS Data Type 1-3 Packet Types 2-15
Figure 2-10. BSE-to-SSGS Interface Diagram 2-19
Figure 2-11. BSE-to-SSGS Interface Pin Out Diagram 2-20
Figure 2-12. Range Calibration Transponder and Mounting Brackets 2-23
Figure 3-1. GVAR Format 3-3
Figure 3-2. Imager Detector Physical Configuration (GOES I-L) 3-8
Figure 3-3. Imager Detector Physical Configuration (GOES M-N) 3-9
Figure 3-4. Imager Detector Physical Configuration (GOES-O and Beyond) 3-10
Figure 3-5. Imager Detector Optical Configuration (GOES I-N) 3-11
Figure 3-6. Imager Detector Optical Configuration (GOES-O and Beyond) 3-12
Figure 3-7. Imager Detector Operation Configuration 3-13
Figure 3-8. Imager Scan Line Generation 3-14
Figure 3-9. Sounder Physical and Optical Detector Configuration 3-16
Figure 3-10. Typical Sounder Scan Scenario 3-21
Figure 3-11. GVAR Bandwidth Utilization (GOES I-P) 3-25
Figure 3-12. GVAR Spare Bandwidth (GOES I-P) 3-26
Figure 3-13. GVAR Block Synchronization Preamble Encoding 3-28
Figure 3-14. Header Organization 3-29
Figure 3-15. Imager IR Detector Data Order in GVAR (GOES I-N) 3-54
Figure 3-16. Imager IR Detector Data Order in GVAR (GOES-O and Beyond) 3-54
Figure 3-17. Imager Visible Detector Logical Versus Physical Ordering 3-55
Figure 3-18. SAD Block 11 Identifier 3-60
Figure 3-19. Sounder Scan Data Block 11 Format 3-72
Figure 3-20. Sounder Detector FOV vs. Aim Point 3-74
Figure 3-21. Sounder Raw and Block 11 Data for the Sample 110-km Scan 3-77
Figure 3-22. Imager Coordinate System (Nominal) 3-151
Figure 3-23. Imager Coordinate System (Yaw-Flipped) 3-152
Figure 3-24. Sounder Coordinate System (Nominal) 3-153
Figure 3-25. Sounder Coordinate System (Yaw-Flipped) 3-154
Figure 3-26. GVAR Block Bit Transmission Order 3-156
Figure 3-27. Timing of Sounder Spacelooks and Blackbody Look 3-169

Figure 3-28. Configuration of All Modes 3-171
Figure 4-1. IEEE 802.3 MAC Layer Frame Format 4-5
Figure 4-2. IEEE 802 LLC PDU Format 4-5
Figure 4-3. Internet Protocol Suite and OSI Reference Model Relationship 4-7
Figure 4-4. IP Packet Format 4-8
Figure 4-5. TCP Header and Pseudo Header Format 4-9
Figure 4-6. Uplink Command Format 4-17
Figure 4-7. SSGS Message Exchange 4-19
Figure 4-8. Communication Message Format 4-21

List of Tables

Table 1-1. GIMTACS Equipment Node Names and Locations 1-4
Table 1-2. SSGS Equipment Node Names and Locations 1-9
Table 1-3. SSGS Hardware by Site and VLAN 1-12
Table 2-1. Nascom Station Mnemonics and Source Codes 2-8
Table 2-2. Nascom Block Header Spacecraft IDs 2-9
Table 2-3. PCM Telemetry Stream Characteristics 2-12
Table 2-4. Command Uplink Characteristics 2-13
Table 2-5. Definition of Eight MDL QPSK Phase Cases 2-14
Table 2-6. MDL Data Packet Format 2-15
Table 2-7. MDL Analog Data Transmission Rates 2-16
Table 2-8. MDL Analog Digitization Order 2-16
Table 2-9. SXI Transfer Frame Description 2-17
Table 2-10. SXI Packet Description 2-17
Table 2-11. BSE Data Simulation Interfaces 2-18
Table 2-12. CDA Range Calibration Transponder Requirements 2-22
Table 2-13. OATS to PC Interconnection 2-24
Table 3-1. GVAR Format 3-4
Table 3-2. Sounder Radiometric Channels 3-17
Table 3-3. Imager GVAR Bandwidth Requirements 3-23
Table 3-4. Sounder GVAR Bandwidth Requirements 3-24
Table 3-5. Header Content 3-30
Table 3-6. Imager Documentation Block 0 (Words 0-6304) Format Definition 3-36
Table 3-7. Imager Documentation Block 0 (Words 6305-8040) (GOES I-N) Format Definition 3-47
Table 3-8. Imager Documentation Block 0 (Words 6305-8040) (GOES-O and Beyond) Format Definition 3-51
Table 3-9. Blocks 1–10 Line Documentation Definition 3-56
Table 3-10. SAD Block 11 Identifier 3-59
Table 3-11. SAD ID Text Messge Block 11 3-60
Table 3-12. Sounder Scan Documentation Block 11 Format 3-62
Table 3-13. Sounder Data Records Block 11 3-73
Table 3-14. Sounder Detector Line and Pixel Locator Block 11 3-75
Table 3-15. Block 11 Sounder Channel-Detector Array Assignments 3-78
Table 3-16. Instrument Compensation Term Records Block 11 3-79
Table 3-17. Instrument Telemetry Block 11 Format 3-81
Table 3-18. Instrument Telemetry Critical Alarm Flag Definitions 3-83

Table 3-19. Instrument Telemetry Warning Flag Definitions 3-84
Table 3-20. Imager Telemetry Point Assignments 3-85
Table 3-21. Sounder Telemetry Point Assignments 3-86
Table 3-22. Imager ECAL Block 11 Format 3-88
Table 3-23. Sounder ECAL Block 11 Format 3-90
Table 3-24. Imager Spacelook Block 11 Format 3-94
Table 3-25. Imager Spacelook and Blackbody Warning Flag Definitions 3-101
Table 3-26. Sounder Spacelook Block 11 Format 3-102
Table 3-27. Sounder Spacelook and Blackbody Warning Flag Definitions 3-104
Table 3-28. Imager Blackbody Block 11 Format 3-106
Table 3-29. Sounder Blackbody Block 11 Format 3-111
Table 3-30. Imager Calibration and Limits Block 11 Format 3-116
Table 3-31. Sounder Calibration and Limits Block 11 Format 3-127
Table 3-32. Imager Calibration Critical Alarm Flag Definitions 3-133
Table 3-33. Sounder Calibration Critical Alarm Flag Definitions 3-135
Table 3-34. Imager NLUT Block 11 Format 3-137
Table 3-35. Sounder NLUT Block 11 Format 3-138
Table 3-36. Imager Star Sense Block 11 Format 3-140
Table 3-37. Sounder Star Sense Block 11 Format 3-142
Table 3-38. Imager Factory Coefficients Block 11 Format (GOES-M and Beyond) 3-144
Table 3-39. Sounder Star Crossing Analysis Terms 3-182
Table 3-40. Imager Star Crossing Analysis Terms 3-183
Table 4-1. SSGS Interface Heritage 4-12
Table 4-2. Telemetry Minor Frame Organization 4-13
Table 4-3. CORTEX^{NT} Minor Frame Packet 4-14
Table 4-4. Standard CORTEXNT Message Header 4-14
Table 4-5. Standard CORTEX^{NT} Message Trailer 4-14
Table 4-6. Clear Command Uplink Request 4-16
Table 4-7. Unused GOES I-M Messages (on SSGS) 4-18
Table 4-8. Communication Message List 4-24
Table 4-9. GIMTACS to PM/SPS Store and Forward Messages 4-31
Table 4-10. GIMTACS to OATS Store and Forward Messages 4-31
Table 4-11. Imager Telemetry List 4-50
Table 4-12. Sounder Telemetry List 4-51
Table 4-13. SPS Configuration Bit Map and Items 4-181
Table 4-14. GIMTACS/GTACS-to-SPS Command Timing Constraints 4-182
Table 5-1. Imager Factory Calibration and Alignment Database 5-2
Table 5-2. Imager Calibration Limits and Alignment Database 5-4
Table 5-3. Sounder Factory Calibration and Alignment Database 5-7
Table 5-4. Sounder Calibration Limits 5-9

Messages

Message 1 – Range Measurement (1 of 3) 4-34
Message 1 – Range Measurement (2 of 3) 4-35
Message 1 – Range Measurement (3 of 3) 4-36
Message 2 – Star Measurement (1 of 3) 4-37
Message 2 – Star Measurement (2 of 3) 4-38
Message 2 – Star Measurement (3 of 3) 4-39
Message 3 – O&A Data Request 4-40
Message 5 – NLUT Data Request 4-41
Message 6 – CORT Data Request 4-42
Message 10 – SPS Health and Status (1 of 5) 4-43
Message 10 – SPS Health and Status (2 of 5) 4-44
Message 10 – SPS Health and Status (3 of 5) 4-45
Message 10 – SPS Health and Status (4 of 5) 4-46
Message 10 – SPS Health and Status (5 of 5) 4-47
Message 11 – Wideband Telemetry (1 of 6) 4-48
Message 11 – Wideband Telemetry (2 of 6) 4-49
Message 11 – Wideband Telemetry (3 of 6) 4-50
Message 11 – Wideband Telemetry (4 of 6) 4-51
Message 11 – Wideband Telemetry (5 of 6) 4-52
Message 11 – Wideband Telemetry (6 of 6) 4-53
Message 12 – SPS Text or Alarm Message 4-54
Message 13-1 & -3 – AVS/ADS Telemetry (GOES N-P Only) (1 of 2) 4-56
Message 13-1 & -3 – AVS/ADS Telemetry (GOES N-P Only) (2 of 2) 4-57
Message 13-2 & -4 – AVS/ADS Telemetry Status (GOES N-P Only) 4-58
Message 14-1 – MRS&S Status (GOES N-P Only) (1 of 4) 4-59
Message 14-1 – MRS&S Status (GOES N-P Only) (2 of 4) 4-60
Message 14-1 – MRS&S Status (GOES N-P Only) (3 of 4) 4-61
Message 14-1 – MRS&S Status (GOES N-P Only) (4 of 4) 4-62
Message 15 (Subtypes 10-FF) – MDL Telemetry Messages (GOES N-P Only) (1 of 2) 4-63
Message 15 (Subtypes 10-FF) – MDL Telemetry Messages (GOES N-P Only) (2 of 2) 4-64
Message 16 (Subtype 10-FF) – MDL Telemetry Transmission Rate (GOES N-P Only) (1 of 2) 4-65
Message 16 (Subtype 10-FF) – MDL Telemetry Transmission Rate (GOES N-P Only) (2 of 2) 4-66
Message 20 – Landmark Measurement (1 of 3) 4-67
Message 20 – Landmark Measurement (2 of 3) 4-68
Message 20 – Landmark Measurement (3 of 3) 4-69
Messages 21 and 22 – IMC Quality Check (1 of 3) 4-70
Messages 21 and 22 – IMC Quality Check (2 of 3) 4-71
Message 22 – IMC Quality Check Completion (3 of 3) 4-72
Message 23 – PM Health & Status (1 of 3) 4-73
Message 23 – PM Health & Status (2 of 3) 4-74
Message 23 – PM Health & Status (3 of 3) 4-75
Message 25 – Imager or Sounder NLUT Message 4-76
Message 25-1 – Imager NLUT Message (1 of 2) 4-76
Message 25-1 – Imager NLUT Message (2 of 2) 4-77
Message 25-2 – Sounder NLUT Message (1 of 2) 4-78

Message 25-2 – Sounder NLUT Message (2 of 2) 4-79
Message 26 – Imager Co-registration Correction..... 4-80
Message 27 – PM Status or Alarm Message..... 4-81
Message 33 – O&A Data Response (1 of 5)..... 4-83
Message 33 – O&A Data Response (2 of 5)..... 4-84
Message 33 – O&A Data Response (3 of 5)..... 4-85
Message 33 – O&A Data Response (4 of 5)..... 4-86
Message 33 – O&A Data Response (5 of 5)..... 4-87
Message 41 – IMC Quality Check Request..... 4-88
Message 42 – Terminate IMC Quality Check Data 4-89
Message 45 – OATS Inter-node Message (1 of 2)..... 4-90
Message 45 – OATS Inter-node Message (2 of 2)..... 4-91
Message 51 – Star View Command Parameter Response (1 of 3)..... 4-92
Message 51 – Star View Command Parameter Response (2 of 3)..... 4-93
Message 51 – Star View Command Parameter Response (3 of 3)..... 4-94
Message 53 – IMC Coefficient Command Parameter Response (GOES N-P) (1 of 4) 4-95
Message 53 – IMC Coefficient Command Parameter Response (GOES N-P) (2 of 4) 4-96
Message 53 – IMC Coefficient Command Parameter Response (GOES N-P) (3 of 4) 4-97
Message 53 – IMC Coefficient Command Parameter Response (GOES N-P) (4 of 4) 4-98
Message 53 – IMC, SMC, or SCC Coefficient Command Parameter Response (GOES I-M) 4-99
Message 53-1 to 53-6 – IMC Coefficient Command Parameter Response (GOES I-M) (1 of 5)..... 4-99
Message 53-1 to 53-6 – IMC Coefficient Command Parameter Response (GOES I-M) (2 of 5)..... 4-100
Message 53-1 to 53-6 – IMC Coefficient Command Parameter Response (GOES I-M) (3 of 5)..... 4-101
Message 53-1 to 53-6 – IMC Coefficient Command Parameter Response (GOES I-M) (4 of 5)..... 4-102
Message 53-1 to 53-6 – IMC Coefficient Command Parameter Response (GOES I-M) (5 of 5)..... 4-103
Message 53-101 – SMC Coefficient Command Parameter Response (GOES I-M) 4-104
Message 53-102 – SCC Coefficient Command Parameter Response (GOES I-M) 4-105
Message 53 – LUT – IMC, SMC, or SCC LUT Format (GOES I-M) (1 of 5)..... 4-106
Message 53 – LUT – IMC, SMC, or SCC LUT Format (GOES I-M) (2 of 5)..... 4-107
Message 53 – LUT – IMC, SMC, or SCC LUT Format (GOES I-M) (3 of 5)..... 4-108
Message 53 – LUT – IMC, SMC, or SCC LUT Format (GOES I-M) (4 of 5)..... 4-109
Message 53 – LUT – IMC, SMC, or SCC LUT Format (GOES I-M) (5 of 5)..... 4-110
Message 54 – OATS Status (GOES I-M) (1 of 3) 4-111
Message 54 – OATS Status (GOES I-M) (2 of 3) 4-112
Message 54 – OATS Status (GOES I-M) (3 of 3) 4-113
Message 54 – OATS Status (GOES N-P) (1 of 4)..... 4-114
Message 54 – OATS Status (GOES N-P) (2 of 4)..... 4-115
Message 54 – OATS Status (GOES N-P) (3 of 4)..... 4-116
Message 54 – OATS Status (GOES N-P) (4 of 4)..... 4-117
Message 55 – Scan Frame Response (1 of 4) 4-118
Message 55 – Scan Frame Response (2 of 4) 4-119
Message 55 – Scan Frame Response (3 of 4) 4-120
Message 55 – Scan Frame Response (4 of 4) 4-121
Message 56 – Stationkeeping CMD Parameters (GOES I-M) (1 of 2) 4-122
Message 56 – Stationkeeping CMD Parameters (GOES I-M) (2 of 2) 4-123
Message 56 – Stationkeeping CMD Parameters (GOES N-P) (1 of 4)..... 4-124
Message 56 – Stationkeeping CMD Parameters (GOES N-P) (2 of 4)..... 4-125
Message 56 – Stationkeeping CMD Parameters (GOES N-P) (3 of 4)..... 4-126
Message 56 – Stationkeeping CMD Parameters (GOES N-P) (4 of 4)..... 4-127

Message 57 – Momentum Dump Command (GOES N-P) (1 of 2) 4-128
Message 57 – Momentum Dump Command (GOES N-P) (2 of 2) 4-129
Message 58 – Trim Tab Command Parameters (GOES I-M) 4-130
Message 59 – Eclipse Prediction Response (1 of 2) 4-131
Message 59 – Eclipse Prediction Response (2 of 2) 4-132
Message 60 – Sensor Intrusion Response (GOES I-M) (1 of 3) 4-133
Message 60 - Sensor Intrusion Response (2 of 3) 4-134
Message 60 - Sensor Intrusion Response (3 of 3) 4-135
Message 60-1 – Sensor and Frame Intrusion Response (GOES N-P) (1 of 3) 4-136
Message 60-1 – Sensor and Frame Intrusion Response (GOES N-P) (2 of 3) 4-137
Message 60-1 – Sensor and Frame Intrusion Response (GOES N-P) (3 of 3) 4-138
Message 60-2 – Sensor and Frame Intrusion Prediction Response (GOES N-P) (1 of 2) 4-139
Message 60-2 – Sensor and Frame Intrusion Prediction Response (GOES N-P) (2 of 2) 4-140
Message 61 – DIRA Drift Command (GOES I-M) 4-141
Message 62 – IMC, SMC, or SCC Set Ready (GOES I-M) (1 of 2) 4-142
Message 62 - IMC, SMC, or SCC Set Ready (2 of 2) 4-143
Message 62 – IMC Set Ready (GOES N-P) (1 of 2) 4-144
Message 62 – IMC Set Ready (GOES N-P) (2 of 2) 4-145
Message 63 – SSAA IMC Set Ready (GOES I-M) (1 of 2) 4-146
Message 63 – SSAA IMC Set Ready (2 of 2) 4-147
Message 66 – DIRA Calibration Data Request (GOES I-M) (1 of 2) 4-148
Message 66 – DIRA Calibration Data Request (2 of 2) 4-149
Message 67 – Trim Tab Data Request (GOES I-M) (1 of 3) 4-150
Message 67 – Trim Tab Data Request (2 of 3) 4-151
Message 67 – Trim Tab Data Request (3 of 3) 4-152
Message 70 – Propulsion Subsystem Data Request (1 of 3) 4-153
Message 70 – Propulsion Subsystem Data Request (2 of 3) 4-154
Message 70 – Propulsion Subsystem Data Request (3 of 3) 4-155
Message 71 – Star Window Request (1 of 2) 4-156
Message 71 – Star Window Request (2 of 2) 4-157
Message 72 – OATS Alarm Text 4-158
Message 73 – Torque Table Updates (GOES N-P) (1 of 2) 4-159
Message 73 – Torque Table Updates (GOES N-P) (2 of 2) 4-160
Message 75 – IMC Scale Factor Calibration Schedule Response (1 of 3) 4-161
Message 75 – IMC Scale Factor Calibration Schedule Response (2 of 3) 4-162
Message 75 – IMC Scale Factor Calibration Schedule Response (3 of 3) 4-163
Message 80 – IMC Scale Factors 4-164
Message 81 – MMC Scale Factors (GOES I-M) 4-165
Message 81 – ISEC Scale Factors (GOES N-P) 4-166
Message 82 – OATS Response Error Text (GOES N-P Only) 4-167
Message 85 – MMC Calibration Data Request (GOES I-M) (1 of 2) 4-168
Message 85 – MMC Calibration Data Request (2 of 2) 4-169
Message 87 – SMC Data Request (GOES I-M) (1 of 2) 4-170
Message 87 – SMC Data Request (2 of 2) 4-171
Message 88 – Thermal Snap Data Request (GOES I-M Only) (1 of 2) 4-172
Message 88 – Thermal Snap Data Request (2 of 2) 4-173
Message 110 – SPS Configuration Control 4-175
Message 110-1 – SPS Configuration Control – Offline Command 4-175
Message 110-2 – SPS Configuration Control – Online Command 4-176

Message 110-3 – SPS Configuration Control – Operate Command 4-177
Message 110-4 – SPS Configuration Control – Configure Command (1 of 6)..... 4-178
Message 110-4 – SPS Configuration Control – Configure Command (2 of 6)..... 4-179
Message 110-4 – SPS Configuration Control – Configure Command (3 of 6)..... 4-180
Message 110-4 – SPS Configuration Control – Configure Command (4 of 6)..... 4-181
Message 110-4 – SPS Configuration Control – Configure Command (5 of 6)..... 4-182
Message 110-4 – SPS Configuration Control – Configure Command (6 of 6)..... 4-183
Message 110-5 – SPS Configuration Control – IDLE Command..... 4-184
Message 110-6 – SPS Configuration Control – Start O&A Command 4-185
Message 110-7 – SPS Configuration Control – Start Imager NLUT Command..... 4-186
Message 110-8 – SPS Configuration Control – Start Sounder NLUT Command 4-187
Message 110-9 – SPS Configuration Control – Start Imager CORT Command..... 4-188
Message 111 – SPS Status Request 4-189
Message 112 – GIMTACS/GTACS Text Message 4-190
Message 113 – AVS/ADS Telemetry Rate Control (GOES N-P) 4-191
Message 114-1 – MRS&S Status Request (GOES N-P) 4-192
Message 115 – MDL Telemetry Message Rate Control 4-193
Message 123 – PM Status Request..... 4-194
Message 129 – GTACS-RPM Text Message (GOES N-P) 4-195
Message 151 – Star View Command Parameter Request (1 of 2) 4-196
Message 151 – Star View Command Parameter Request (2 of 2) 4-197
Message 153 – IMC, SMC, or SCC Coefficient Request 4-198
Message 154 – OATS Health and Status Request (1 of 3) 4-199
Message 154 – OATS Health and Status Request (2 of 3) 4-200
Message 154 – OATS Health and Status Request (3 of 3) 4-201
Message 155 – Scan Frame Request (1 of 3)..... 4-202
Message 155 – Scan Frame Request (2 of 3)..... 4-203
Message 155 – Scan Frame Request (3 of 3)..... 4-204
Message 159 – Eclipse Predictions Request 4-205
Message 160 – Sensor Intrusion Request 4-206
Message 162 – IMC Set Request (GOES N-P) (1 of 2)..... 4-207
Message 162 – IMC Set Request (GOES N-P) (2 of 2)..... 4-208
Message 164 – IMC, SMC, or SCC Set Enabled or Yaw-Flip State (1 of 2) 4-209
Message 164 – IMC, SMC, or SCC Set Enabled or Yaw-Flip State (2 of 2) 4-210
Message 165 – IMC or MMC Status Change (1 of 2) 4-211
Message 165 – IMC or MMC Status Change (2 of 2) 4-212
Messages 166 & 176 – DIRA Calibration Data Response (GOES I-M)..... 4-213
Message 166 – DIRA Calibration Data Response (GOES I-M) (1 of 2) 4-213
Message 166 – DIRA Calibration Data Response (GOES I-M) (2 of 2) 4-214
Messages 167 & 177 – Trim Tab Data Response (GOES I-M)..... 4-215
Message 167-1 – Trim Tab Data Response (GOES I-M) (1 of 2) 4-215
Message 167-1 – Trim Tab Data Response (GOES I-M) (2 of 2) 4-216
Message 167-2 – Trim Tab Data Response (GOES I-M) (1 of 2) 4-217
Message 167-2 – Trim Tab Data Response (GOES I-M) (2 of 2) 4-218
Message 168 – Momentum Telemetry Responses (GOES N-P) (1 of 3)..... 4-219
Message 168 – Momentum Telemetry Responses (GOES N-P) (2 of 3)..... 4-220
Message 168 – Momentum Telemetry Responses (GOES N-P) (3 of 3)..... 4-221
Message 170 – Propulsion Subsystem Data Response (GOES N-P) (1 of 2) 4-222
Message 170 – Propulsion Subsystem Data Response (GOES N-P) (2 of 2) 4-223

Messages 170 & 180 – Propulsion Subsystem Data Response (GOES I-M) 4-224
Message 170-1 – Propulsion Subsystem Data Response (GOES I-M) (1 of 2) 4-224
Message 170-1 – Propulsion Subsystem Data Response (GOES I-M) (2 of 2) 4-225
Message 170-2 – Propulsion Subsystem Data Response (GOES I-M) (1 of 2) 4-226
Message 170-2 – Propulsion Subsystem Data Response (GOES I-M) (2 of 2) 4-227
Message 175 – IMC Scale Factor Calibration Schedule Request 4-228
Message 176 – DIRA Calibration Data Response (GOES I-M) 4-229
Message 177 – Trim Tab Data Response (GOES I-M) (1 of 2) 4-230
Message 177 – Trim Tab Data Response (GOES I-M) (2 of 2) 4-231
Message 180 – Propulsion Subsystem Data Response (1 of 2) 4-232
Message 180 – Propulsion Subsystem Data Response (2 of 2) 4-233
Messages 185 & 195 – MMC Calibration Data Response (GOES I-M) 4-234
Message 185 – MMC Calibration Data Response (GOES I-M) (1 of 2) 4-234
Message 185 – MMC Calibration Data Response (2 of 2) 4-235
Messages 187 & 197 – SMC Data Response and Completion (GOES I-M) 4-236
Message 187 – SMC Data Response (GOES I-M) (1 of 2) 4-236
Message 187 – SMC Data Response (GOES I-M) (2 of 2) 4-237
Messages 188 & 198 – Thermal Snap Data Response and Completion (GOES I-M) 4-238
Message 188 – Thermal Snap Data Response (GOES I-M) (1 of 2) 4-238
Message 188 – Thermal Snap Data Response (GOES I-M) (2 of 2) 4-239
Message 190 – Spacecraft Equipment Status (GOES I-M) (1 of 2) 4-240
Message 190 – Spacecraft Equipment Status (GOES I-M) (2 of 2) 4-241
Message 195 – MMC Calibration Data Completion (GOES I-M) 4-242
Message 197 – SMC Data Completion (GOES I-M) 4-243
Message 198 – Thermal Snap Data Completion (GOES I-M) 4-244
Message 199 – GTACS-OATS Text Message (GOES N-P) 4-245
Message 202 – Labeled Star Measurement (1 of 3) 4-246
Message 202 – Labeled Star Measurement (2 of 3) 4-247
Message 202 – Labeled Star Measurement (3 of 3) 4-248
Message 205 – Single Chord Operations Notification (GOES I-M) 4-249
Message 301 – AGC Monitor Telemetry (GOES I-M) 4-250

Section 1.0 Introduction

This section presents the scope of the document and provides a high-level Geostationary Operational Environmental Satellite (GOES) I-M and NOP system descriptions, including the spacecraft, its associated ground support system, the Imager and Sounder instruments, and the output GOES Variable Format (GVAR). It then identifies the Operations Ground Equipment's (OGE's) external interfaces, the document organization, and references.

Terminology: Product Monitor (PM) and Replacement Product Monitor (RPM) are synonymous and are used interchangeably throughout the document.

Spacecraft Terminology is blended throughout the document:

GOES-8 = GOES-I
GOES-9 = GOES-J
GOES-10 = GOES-K
GOES-11 = GOES-L
GOES-12 = GOES-M
GOES-13 = GOES-N
GOES-14 = GOES-O
GOES-15 = GOES-P

1.1 Scope

This document provides a definition of the GOES OGE components' interfaces to external systems at the National Oceanic and Atmospheric Administration (NOAA) Command and Data Acquisition (CDA) Stations (CDAS) at Wallops Island, Virginia (WCDAS), Fairbanks, Alaska (FCDAS), the Wallops Backup CDAS (WBU) at the Goddard Space Flight Center (GSFC), and the Satellite Operations and Control Center (SOCC) located in the NOAA Satellite Operations Facility (NSOF) in Suitland, Maryland.

1.2 Background

NOAA, in a joint effort with the National Aeronautics and Space Administration (NASA), developed the GOES I-M spacecraft, a series of three-axis-stabilized satellites. The GOES I-M spacecraft provide greater environmental data collection and dissemination capabilities than do the spin-stabilized satellites they replaced. The GOES satellites have separate Imager and Sounder instruments, providing continuous soundings, more channels, and higher resolution data, and include an independent, higher power Weather Facsimile (WEFAX) dissemination channel. GOES-8, the first of the new spacecraft, was launched in April 1994; GOES-9 was launched in May 1995; GOES-10 was launched in April 1997; GOES-11 was launched in May 2000; and GOES-12 was launched in July 2001. Three GOES I-M follow-on spacecraft, designated GOES N-P, have since been launched and will be described in Section 1.2.2. As of this update, GOES-8, 9, and 10 have been

decommissioned, and GOES-11 and 13 (from the GOES N-P series) are currently the operational satellites.

As is described in Section 3.0, GOES-10 experienced a solar array drive anomaly that required operation of the solar array in the reverse direction. This was accomplished by rotating the spacecraft in the North-South (N-S) axis (yaw flipping), so the solar array tracks the Sun while rotating in the reverse direction. GOES I-M Telemetry and Command System (GIMTACS) and OGE software modifications were made to support instrument operations in this inverted mode with a minimum of impact to user ingest systems. The user impacts are addressed in the *Earth Location User's Guide*.

1.2.1 GOES I-M System Description (GIMTACS)

The basic elements of the GOES I-M ground system are the GIMTACS and the OGE. GIMTACS and OGE functions are divided between the SOCC and the CDASs. The SOCC performs scheduling, planning, spacecraft commanding, telemetry processing, and offline engineering and analysis functions. The CDAS provides the primary Radio Frequency (RF) interface to the spacecraft, Imager and Sounder data processing, and uplink of the GVAR broadcast. The CDAS is also equipped to assume all functions in case of loss of the SOCC. The WBU can assume all CDAS functions for a single satellite in case of loss of the CDAS. The Fairbanks CDAS can also assume all functions for a single satellite. However, the FCDAS has redundant functionality. There are two Telemetry Acquisition and Command Transmission System (TACTS) and two Communications Controllers (CCs). The single GOES capable antenna limits it to a single satellite stream. Figure 1-1 presents an overview of the GOES I-M system and the basic interfaces among the various GOES ground system elements.

The GIMTACS performs all real-time and non-real-time spacecraft telemetry data processing and analysis, spacecraft commanding, command schedule generation, and ground system monitoring and control functions for up to five spacecraft (which allows real and simulated spacecraft testing and operations). The SOCC GIMTACS configuration consists of Telemetry and Command System (TCS) processors, up to 99 workstations, multiple printers, and CCs, all interconnected with a Cisco Catalyst 6000 Local Area Network (LAN) switch.

The WCDAS GIMTACS configuration consists of TCS processor, up to 15 workstations, and CCs, also interconnected with a Cisco Catalyst 6000 LAN switch. The CCs at the CDAS provide the interface between GIMTACS and the TACTS, the Sensor Processing Systems (SPSs), the PMs, and NASA Communications Network (Nascom) (for access to the Deep Space Network [DSN] and Air Force ground stations for launch, testing, and anomaly support). The TACTSs, each of which can support one spacecraft, provide the baseband-to-Intermediate Frequency (IF) interface between GIMTACS and the GOES RF system. A Personal Computer (PC) based Automatic Gain Control (AGC) Monitor system also exists at the CDASs to provide information on the lock status of the Pulse Code Modulation (PCM) telemetry links. The AGC Monitor interfaces with the GIMTACS TCSs directly via the Ethernet LAN using the Internet Protocol (IP) and the User Datagram Protocol (UDP).

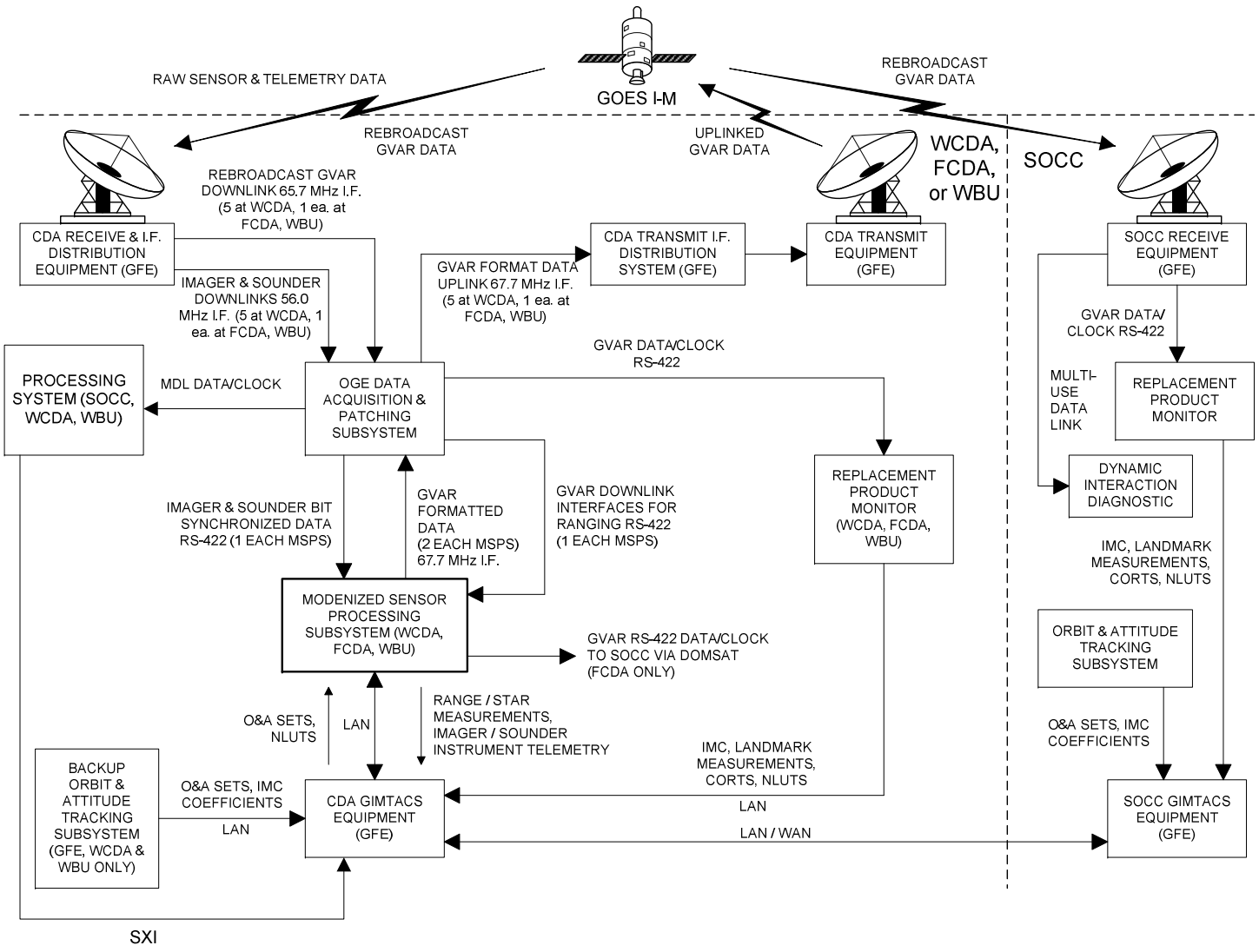

Figure 1-1. GOES Hardware Subsystem

Table 1-1 lists the GIMTACS equipment, showing the type of system, the number of systems at each site, and the node names.

Table 1-1. GIMTACS Equipment Node Names and Locations

	SOCC		CDA		WBU		FBK	
Equipment	**NOAA Name**	**Node Name**	**NOAA Name**	**Node Name**	**NOAA Name**	**Node Name**	**NOAA Name**	**Node Name**
WS	S01 S99	SWKS01 SWKS99	C01 C15	CWKS01 CWKS15	G01 G05	GWKS01 GWKS05	F01 F10	FWKS01 FWKS10
TCS	TCS1 TCS2 TCS3 TCS4 TCS9	STCS01 STCS02 STCS03 STCS04 STCS05	TCS5 TCS6	CTCS01 CTCS02	TCS7	GTCS01	TCS8	FTCS01
OATS	SOAT01 SOAT02 SOAT03 SOAT04 SOAT05 SOAT06	SOAT01 SOAT02 SOAT03 SOAT04 SOAT05 SOAT06	COAT01 COAT02	COAT01 COAT02	GOAT01 GOAT02	GOAT01 GOAT02		
COMM	COMM1 COMM2	SCOM01 SCOM02	COMM3 COMM4 COMM5 COMM6 COMM7	CCOM01 CCOM02 CCOM03 COMM04 COMM05	COMM8	GCOM01	COMM9 COMM10	FCOM01 FCOM02
TACTS			TACTS1 TACTS2 TACTS3 TACTS4 TACTS5		TACTS6 TACTS7		TACTS8 TACTS9	
PM	PM1 PM2 PM3 PM4 PM10		PM5 PM6 PM7		PM8		PM9	
SPS			SPS1 SPS2 SPS3 SPS4 SPS5 SPS6 SPS9		SPS8		SPS7	
Simulator	GS1 GS2	SGSS01 SGSS02	SIM1 SIM2	CGSS01 CGSS02	SIM3	GGSS01	SIM4	FGSS01

The Backup CDAS configuration mimics the CDAS but only provides a single string of GIMTACS and OGE components; that is, one GIMTACS TCS, workstations, and one CC. The FCDAS also mimics the WCDAS but is not fully redundant. It has redundant systems for the CCs but only has a single TCS and PM. It has no OATS.

Interconnectivity between the SOCC and the CDAS GIMTACS LANs is provided through routers interconnected by 512 kbps circuits derived from leased, FTS 2000 terrestrial T1 lines plus a leased 56 kbps domestic satellite circuit. Voice order wire circuits are also provided through the T1 lines.

The OGE is comprised of the following components:

a. OGE Data Acquisition and Patching Subsystem (ODAPS)
b. Sensor Processing System (SPS)
c. Product Monitor (PM) System
d. Orbit and Attitude Tracking System (OATS).

The ODAPS resides at the CDAS, providing the interface between the GOES RF systems and the SPSs and PMs. The ODAPS contains Summation Research Inc. (SRI) SD-4220 Demodulator/ Decoder units that provide the raw Imager and Sounder data inputs to the SPS and the GVAR data inputs to the SPSs (for ranging) and RPMs.

1.2.1.1 SPS

The SPSs perform all functions associated with processing Imager and Sounder instrument data from the GOES spacecraft, one spacecraft per SPS. The functions include visible image normalization, Infrared (IR) radiometric calibration, Earth location and gridding annotation, reformatting of instrument data into the GVAR format, Binary Phase Shift Keyed (BPSK) modulation of the GVAR data stream, and spacecraft ranging. The modulated GVAR signal is passed to the GOES RF system through the ODAPS for uplink to the spacecraft.

The WCDAS SPSs are used to support the GOES East spacecraft, the GOES West spacecraft, and three spares. The spares typically provide hot backups but can also be used to support testing or third spacecraft operations on a limited basis. The FCDAS SPSs were used to support the GOES-9 spacecraft over the Pacific until it was decommissioned. It now serves as a backup for GOES-11. The WBU SPS is for contingency operations primarily of the GOES East spacecraft but can also support the West spacecraft. The SPSs are interconnected through an Ethernet LAN and communicate with GIMTACS and the OATSs through a Transmission Control Protocol/Internet Protocol (TCP/IP) connection to the GIMTACS CCs at the CDAS. The SPSs send ranging and star sense data to OATS and instrument wideband telemetry and SPS status data to GIMTACS. Communications between the SPSs and the PMs are as follows: the SPS sends text messages and data to the PMs through the GVAR broadcast, and the PMs send data messages to the SPSs through a TCP/IP interface with the GIMTACS CCs.

The SPS subsystem also includes an analyst workstation capability at the SOCC and the CDAS through which analysts can access Imager and Sounder SPS archive data maintained at the CDAS for

analysis purposes. The analyst workstation functions are hosted on the RPM Consolidated Analysis Workstation (CAWS) computers and are connected to the SPS LAN via routing from the RPM LAN router.

1.2.1.2 PM

PMs reside at the SOCC, WCDAS, FCDAS, and WBU, each capable of supporting one GVAR data stream at a time. One PM is normally assigned to the GOES East broadcast, one to the GOES West broadcast, and one to the GOES far West broadcast. The primary functions of the PMs are to provide landmark registration and monitor and analyze the quality of the image and non-image data broadcast in the GVAR data stream, feeding back any required changes to the SPS through a TCP/IP connection to the GIMTACS LAN. The PMs interface with the OATS through the GIMTACS LAN connection, providing landmark registration and Image Motion Compensation (IMC) quality check data in support of Image Navigation and Registration (INR) and attitude determination. The CDAS PMs back up the SOCC PM image monitoring function (one for GOES East, one for GOES West, and one spare).

1.2.1.3 OATS

The OATS performs Orbit and Attitude Determination (OAD) computations, generates IMC coefficients, Mirror Motion Compensation (MMC) coefficients, Spacecraft Motion Compensation (SMC) coefficients, and Single Chord Correction (SCC) coefficients used on-board the spacecraft, performs stationkeeping maneuver planning, and analysis functions related to spacecraft attitude control systems. These functions are accomplished using telemetry and status data obtained from GIMTACS, star sense and range data provided by the SPSs, landmark and IMC data obtained from the PMs. The OATS also supports the GIMTACS command-level schedule generation process, generating instrument commands for image frame coordinates and definitions, scheduling starlooks, and scheduling spacecraft Trim Tab and Digital Integrating Rate Assembly (DIRA) maintenance.

The SOCC OATS workstations are on their own Ethernet LAN, configured through the Cisco switch, and are bridged to the operational GIMTACS LAN. The CDAS OATS are also on their own Ethernet LAN, configured through their Cisco switch, and are bridged to the operational GIMTACS LAN. The CDAS bridge connection is normally off, however, there is connectivity between the SOCC and CDAS OATS via a Wide Area Network (WAN) connection through routers and a 256 kbps circuit derived from the leased T1 circuits. The CDAS bridge connection is only activated when there is a WAN failure and CDAS takes over for SOCC. Both the SOCC and CDAS OATS functions are performed on primary and backup systems at the SOCC, with additional backup systems installed at the CDAS. The OATS workstations are attached to the GIMTACS LANs at the SOCC and the CDAS through bridges, and interface with the SPSs and PMs through the GIMTACS CCs.

1.2.2 GOES N-P System Description (SSGS)

1.2.2.1 Mission Overview

NOAA, in a joint effort with NASA, has developed the GOES spacecraft to perform three major functions:

a. Environmental Sensing. Acquire and process Earth atmospheric imaging and sounding data, space environment data, and solar x-ray image data.

b. Data Collection. Interrogate and receive data from Earth surface-based data collection platforms and relay the data to NOAA CDASs for dissemination to Data Collection System (DCS) users.

c. Data Broadcast. Provide continuous relay of Earth atmospheric imaging and sounding (GVAR), WEFAX, and other meteorological information to data users; and relay of distress signals from aircraft or marine vessels to the Local User Terminal ground station of the search and rescue satellite-aided tracking system.

Because the Atlantic and Pacific basins strongly influence the weather affecting the United States, nominal coverage is provided by two GOES spacecraft, one at 75° West longitude, GOES East, and the other at 135° West longitude, GOES West. A third GOES spacecraft, if available, is parked as a spare at 105° West longitude. The GOES spacecraft, on-station 35,790 kilometers (22,240 statute miles) above the equator and stationary relative to the Earth's surface, can view the entire Earth's disk to about ±80º latitude and surrounding space. The coverage area includes the contiguous 48 states, Canada, major portions of the central and eastern Pacific Ocean, and the central and western Atlantic Ocean areas, and the entire South American continent. Pacific coverage includes the Hawaiian Islands and Gulf of Alaska. Three NOAA ground stations are configured to provide dedicated support for commanding and engineering and raw instrument telemetry reception: the WCDAS at Wallops, VA, the WBU at the GSFC in Greenbelt, MD, and the FCDAS in Fairbanks, AK. WCDAS and WBU have continuous lines-of-sight to both active and the spare spacecraft allowing either station to uplink commands and receive downlink data from either spacecraft. FCDAS can only see the GOES West and the spacecraft in storage. Data collection platforms within a spacecraft's coverage area transmit their data to a CDAS and direct readout ground stations via the onboard data collection subsystem. Similarly, other ground terminals in the spacecraft coverage area can receive processed environmental (GVAR) data, and WEFAX and EMWIN transmissions. In addition, the Space Weather Prediction Center (SWPC) in Boulder, CO, is equipped to receive SXI and Space Environment Monitor (SEM) instrument data directly from both active spacecraft.

The combined footprint (radiometric coverage and communications range) of the two active spacecraft encompasses Earth's full disk about the meridian approximately in the center of the continental United States. Circles of observational limits centered at a spacecraft's sub-orbital point extend to about 80° North/South latitudes.

The GOES N-P spacecraft are follow-on spacecraft in an ongoing series of GOES spacecraft. These spacecraft will fly Imager and Sounder instruments, an SXI and SEM instruments. The Imager and

Sounder both provide full Earth imagery, sector imagery containing the edges of Earth's disk, and area scans of local regions. Both instruments sweep their programmed field of view scanning an East-to-West swath while stepping North-to-South. The Imager is a multi-spectral, Earth-scanning instrument capable of sweeping simultaneously one visible and four infrared channels. The Sounder is capable of stepping one visible and 18 infrared channels. The Sounder products are used to augment data from the Imager to provide information on atmospheric temperature and moisture profiles, surface and cloud top temperatures, and the distribution of atmospheric ozone. The SXI uses an X-ray image detector to observe the size, temperature, and shape of solar active regions. The GOES spacecraft also include SEM instruments to monitor the space environment in the vicinity of the spacecraft. The SXI and SEM data are used by the SWPC to predict solar-terrestrial events, such as geomagnetic storms, that might adversely impact astronauts and Earth's electrical power grids.

1.2.2.2 SSGS Overview

The GOES N-P SSGS is the portion of the GOES ground system that generates the spacecraft commands for uplink; processes the command and control telemetry downlinks, Imager and Sounder instrument data downlinks, and the MDL data downlink; generates the GVAR data uplink to the spacecraft; determines the spacecraft orbit and attitude using starlook, range, and landmark data; and monitors the quality of the GVAR data broadcast by the GOES spacecraft.

The GOES SSGS equipment resides in NOAA SOCC locations in Suitland, MD, WCDAS, WBU, FCDAS, and SWPC. The CDASs provide the RF transmit and receive interface with the spacecraft for all functions. The three CDASs used for GOES N-P offer similar capabilities, but WBU and FCDAS each have only one antenna; they can support only one spacecraft at a time. The SOCC is capable of receiving only the GVAR and MDL signals, and the SWPC can only receive the MDL signal. Primary GOES command, control, scheduling, and engineering operations activities are hosted in the SOCC, but complete backup capabilities are maintained at the CDASs.

The GOES N-P SSGS consists of seven elements: N-P Telemetry Acquisition and Command Transmission System (NTACTS), GOES N-P Telemetry and Command System (GTACS), OATS, MDL Receive System & Server (MRS&S), Dynamic Interaction Diagnostic (DID), SPS, and RPM. The NTACTS, GTACS, OATS, and MRS&S have hardware and software developed and dedicated to supporting GOES N-P. The DID has GOES N-P specific software, but is hosted on hardware shared with GOES I-M. The SPS and RPM are completely reused from GOES I-M. Table 1-3 lists the SSGS equipment, showing the type of system, the number of systems at each site, and the node names.

Table 1-2. SSGS Equipment Node Names and Locations

	SOCC	WCDA	WBU	FBK	SWPC
Equipment	**Node Name**	**Node Name**	**Node Name**	**Node Name**	**Node Name**
WS	NSWKS01 NSWKS99	NCWKS01 NCWKS20	NGWKS01	NFWKS01	NBWKS01 NBWKS02
GTACS	SGTACS01 SGTACS02 SGTACS03 SGTACS04 SGTACS05	CGTACS01 CGTACS02 CGTACS03 CGTACS04	GGTACS01	FGTACS01	
OATS	SOAT11 SOAT12 SOAT13 SOAT14 SOAT15 SOAT16 SOAT17	COAT11 COAT12 COAT13	GOAT11		
MRSS	SMRSS01 SMRSS02 SMRSS03 SMRSS04 SMRSS05	CMRSS01 CMRSS02 CMRSS03 CMRSS04 CMRSS05	GMRSS01	FMRSS01	BMRSS01 BMRSS02 BMRSS03 BMRSS04
DID	SDID01 SDID02 SDID03				
NTACTS	SCORTEX01	CCORTEX01 CCORTEX02 CCORTEX03 CCORTEX04 CCORTEX05 CCORTEX06	GCORTEX01 GCORTEX02	FCORTEX01 FCORTEX02	
RPM	RPM1 RPM2 RPM3 RPM4 RPM10	RPM5 RPM6 RPM7	RPM8	RPM9	
SPS		SPS1 SPS2 SPS3 SPS4 SPS5 SPS6 SPS9	SPS8	SPS7	

Figure 1-2 shows the distribution of the elements at the sites which provide GOES N-P support. SSGS external interfaces include operator inputs, ground station RF signals for spacecraft telemetry, command, ranging and instrument data, time codes (IRIG-B), telemetry and command data exchanged with the Boeing Spacecraft Emulator (BSE), and various spacecraft-related databases.

The SSGS receives several independent data streams from each spacecraft and provides the following processing:

a. SPSs at the CDASs receive and process raw Imager and Sounder data to provide highly accurate, Earth-located, calibrated imagery and sounding data in near real time. The SPS outputs the processed data in the GVAR format as a modulated IF signal for uplink to the originating spacecraft and subsequent relay to principal users. The SPS at the CDAS also receives the GVAR broadcast for computation of spacecraft ranges, the third observable used by OATS for orbit and attitude determination. In addition, the SPS extracts Imager and Sounder star sense data and instrument wideband health and status data included in the raw instrument downlink. The SPS formats these data and sends them to GTACS as wideband telemetry messages. GTACS uses the wideband data for instrument health and safety monitoring and forwards the star sense data to OATS for use in orbit and attitude determination.

b. RPMs at the SOCC and CDASs receive the GVAR broadcast for use in monitoring image quality and instrument detector calibration, and registering landmarks. The RPMs send the landmark registration data to OATS for use in orbit and attitude determination. The GVAR signal received at SOCC is also forwarded to the NOAA Science Center in Camp Springs, MD, for use by the National Weather Service (NWS).

c. Each NTACTS at the CDASs can simultaneously receive and process two PCM engineering telemetry streams from one satellite. (PCM 1 is the normal, operational NOAA telemetry stream at 2209.086 MHz, referred to as NT2209; PCM 2 is the DSN launch and anomaly stream at 1694 MHz, referred to as NT1694.) An NTACTS bit and frame synchronizes these data streams and passes the data to GTACS for further processing. These streams contain spacecraft and instrument health and safety data used in GTACS for monitoring the health and status of the spacecraft and for monitoring spacecraft command execution performed either from the ground or from stored commands on the spacecraft.

d. The MRS&Ss at the CDASs, SOCC, and SWPC receive the MDL signal at IF from the RF receive system. They demodulate, demultiplex, frame synchronize, and archive the multiple data components contained in the MDL stream. Components included in the MDL are SXI telemetry frames, the two spacecraft PCM telemetry streams, spacecraft dynamics data such as angular displacement velocities and instrument servo error, and, potentially, data from up to two Instruments of Opportunity (IOs). An MRS&S makes the dynamics data available to a DID for diagnosing dynamic interactions among the instruments and the spacecraft. The MRS&S also sends SXI housekeeping telemetry, memory dump, and events packets to GTACS, and makes the SXI transfer frame data available to other requesting clients. GTACS can also request the MRS&S to send either or both PCM streams extracted from the MDL to GTACS, providing an alternate source for PCM dwell telemetry that avoids using the DSN downlink frequency. In addition, the MRS&S can extract selected data points from the PCM telemetry streams, such as Hemispheric Inertia Reference Unit (HIRU) (gyro) data, for real-time plotting on the DID workstation.

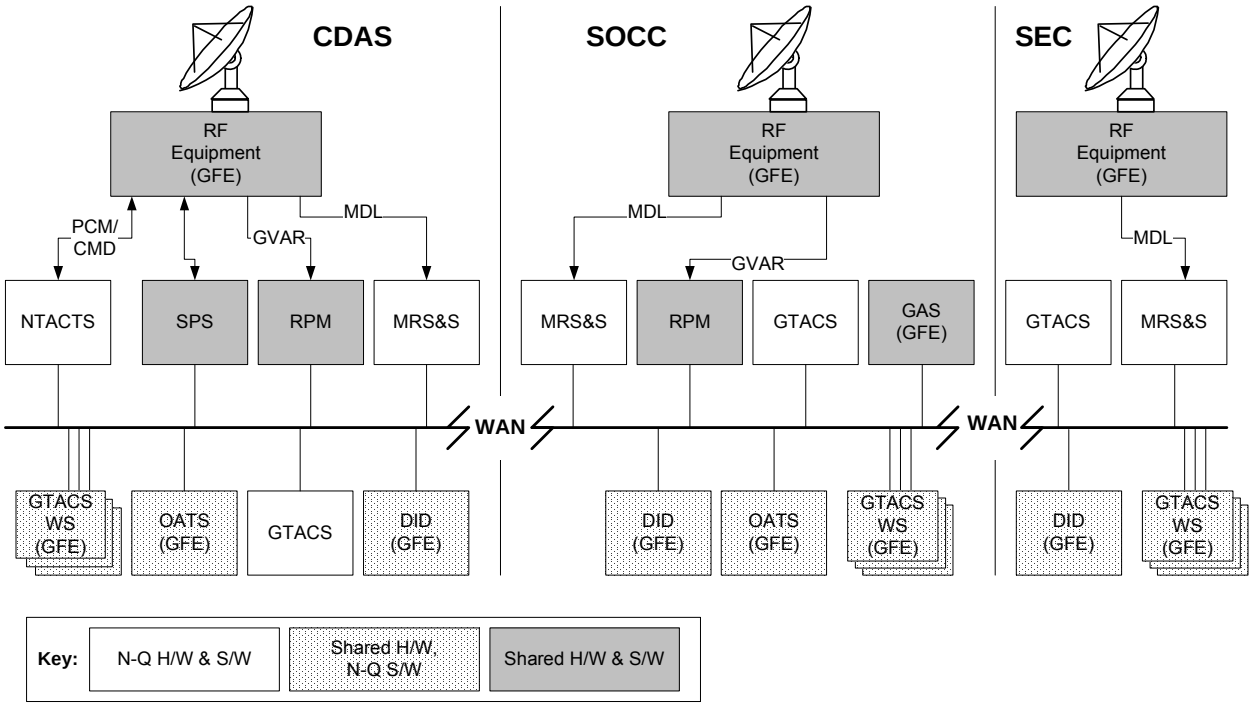

Figure 1-2. SSGS Elements at the CDASs, SOCC, and SWPC

Spacecraft commanding is accomplished within GTACS. Bit-level, encrypted commands are transferred from GTACS to NTACTS, which provides the interface to the WCDAS RF system for uplink to the spacecraft.

The GOES N-P SSGS uses TCP/IP for data exchange between its elements via LANs (Local Area Networks). WAN interconnectivity between the SOCC and the CDASs is provided via routers at each site interconnected by landline circuits and a domestic satellite circuit. The WANs and LANs provide data exchange between the SSGS elements which are distributed among the sites.

There are two independent Virtual LANs (VLANs) dedicated to the N-P SSGS, one for Operations (OPs) and one for Development (Dev). The N-P VLANs are independent from the I-M VLANs. Each N-P VLAN hosts a complete set of SSGS elements, allowing full checkout of system changes on the Dev VLAN. The OPs VLAN connects all SSGS sites; the Dev VLAN connects the SOCC, WCDAS, and SWPC.

Table 1-3 provides a list of SSGS hardware on each VLAN by site.

Table 1-3. SSGS Hardware by Site and VLAN

Site	Element	OPs VLAN	Dev VLAN	Spares	Site Total
SOCC	NTACTS	0	0	0	0
	GTACS	2	3	1	6
	PTP	2	1	0	3
	Encryptor	2	0	0	2
	GAIM	2	2	1	5
	OATS	4	3	0	7
	MRS&S	3	2	1	6
	MRS&S Demodulators	3	1	0	4
	DID (GFE)	1	1	0	2
WCDAS	NTACTS	2	0	2	4
	GTACS	2	2	0	4
	PTP	2	0	0	2
	Encryptor	4	0	0	4
	OATS	2	1	0	3
	MRS&S	3	2	0	5
	MRS&S Demodulators	3	0	0	3
	DID (GFE)	0	0	0	0
WBU	NTACTS	0	NA	0	0
	GTACS	1	NA	0	1
	PTP	1	NA	0	1
	Encryptor	1	NA	0	1
	OATS	1	NA	0	1
	MRS&S	1	NA	0	1
	MRS&S Demodulators	1	NA	0	1
	DID (GFE)	0	NA	0	0
SWPC	NTACTS	0	0	0	0
	GTACS	0	0	0	0
	PTP	0	0	0	0
	Encryptor	0	0	0	0
	OATS	0	0	0	0
	MRS&S	3	1	0	4
	MRS&S Demodulators	3	0	0	3
	DID (GFE)	1	1	0	2
FCDAS	NTACTS	0	NA	0	0
	GTACS	1	NA	0	1
	PTP	0	NA	0	0
	Encryptor	1	NA	0	1
	OATS	0	NA	0	0
	MRS&S	1	NA	0	1
	MRS&S Demodulators	1	NA	1	2
	DID (GFE)	0	NA	0	0

The SSGS elements are described in the following sections.

1.2.2.3 NTACTS

NTACTS provides the interface between GTACS and the Government Furnished Equipment (GFE) RF systems at the CDASs for PCM telemetry receipt and spacecraft command transmission. The function of the NTACTS is similar to that of the RTACTS in the GOES I-M ground system. Each NTACTS services a single GOES N-P spacecraft. An NTACTS can receive two 4-kbps PCM telemetry streams as IF signals from the RF system and, for each stream, bit synchronize, frame synchronize, time tag, and format the minor frame data for transmission to GTACS. NTACTS receives binary commands from GTACS in a form ready for uplink (encryption is performed within GTACS), meters them out at the uplink bit rate of 2 kbps, and modulates an IF command signal that is passed to the CDAS ground station RF equipment for transmission to the spacecraft. In support of the command link, NTACTS sweeps the carrier to establish carrier lock with the spacecraft at the initiation of contact with a spacecraft and transmits an idle pattern between commands to maintain lock. An NTACTS can send telemetry data to multiple GTACS to support redundant telemetry monitoring. However, NTACTS allows only one GTACS at a time to establish a command connection. NTACTS also includes a capability to generate and process ranging signals for orbit determination. NTACTS sends processing status and configuration data, receiver AGC data, and ranging data to GTACS.

1.2.2.4 GTACS

GTACS performs all PCM telemetry data processing and analysis, spacecraft commanding, command schedule generation, and ground system monitoring and control functions. GTACS provides capabilities similar to those provided by GIMTACS for the GOES I-M ground system. GTACS functionality is provided by a distributed system of servers and user workstations located at the SOCC and CDASs.

GTACS consists of several components, the heart of which is a server. A GTACS server receives data streams from NTACTS (raw PCM minor frames), MRS&S (SXI housekeeping data), and SPS (Imager and Sounder housekeeping data), as well as processing status information from each of these elements. The server decommutates data from each of these sources, converts values to engineering units, limit checks the values, and provides the resulting parameter values to other GTACS processes, such as user displays. Each server also records the raw data from all these sources into a seven-day archive. Each server can furnish these services concurrently for multiple spacecraft. Altogether, GTACS can support up to eight spacecraft (including real and simulated spacecraft testing and operations). The GTACS servers provide command generation for spacecraft commanding, real-time schedule execution (if schedule commanding is from the ground), and monitoring of onboard real-time schedules. GTACS nominally encrypts binary commands before transmission to NTACTS for uplink.

In addition to the GTACS servers at each site, GTACS Archive Interface Machine (GAIM) servers at the SOCC collect GOES N-P telemetry data from prime and backup GTACS servers for transfer to the GOES Archive System (GAS), which provides long-term data archive storage and retrieval for both GOES I-M and GOES N-P.

More than one server can be configured to receive data for a spacecraft, providing redundancy in case of a server or network failure. If multiple servers are configured to support one spacecraft, one server is configured as prime, with the other servers configured as backups. Only the prime server can generate spacecraft commands, and only one user on the prime can have command authority to issue commands. In a redundant configuration, any server at any CDAS and the SOCC can monitor telemetry from the same spacecraft.

User interaction with the system is provided using Intel-based workstations running Microsoft's Windows operating system. A pool of these workstations can be used to support different missions and different aspects of those missions. The function performed by a workstation is determined by what privileges a user is assigned, by what software is activated on the workstation, and by what server it is connected to. Cross-compatibility between GOES N-P and other missions by the same software is not supported.

The Intel workstations support three categories of user operations for GTACS. These uses are not mutually exclusive.

a. A workstation can be configured to provide commanding and real-time telemetry monitoring in conjunction with a selected GTACS server. An operator can monitor telemetry and system data points using a variety of parameter text displays and plots. Users can also create and run procedures that make use of telemetry and other system data.
b. A workstation can be configured to provide analysis of non-real-time data. Using this capability, a user can perform trending analysis, recall archived data, and use additional analysis tools not available in real time. This data can be displayed in a variety of tabular and plot formats and printed or saved as reports.
c. A workstation can be configured to provide schedule generation support. In this mode, a user can start create a set of schedules for daily operations to be commanded either from the ground or from the spacecraft. The scheduler function then distributes the schedules to selected GTACS servers for later use.

GTACS is very flexible in how its resources can be configured, subject to WAN bandwidth limitations. A server at any site can be configured to ingest data received at any CDAS. A user workstation can be configured for real-time operations with any SOCC or CDAS server. Thus, GTACS operations can be performed at any site. However, the operations staff is located primarily at the SOCC for normal operations, using a server at the WCDAS selected as prime. WCDAS personnel can assume control in case of WAN failures by using workstations located at WCDAS.

1.2.2.5 OATS

The OATS performs four major functions in support of mission operations. These functions are accomplished using telemetry and status data obtained from GTACS, star sense and range data provided by the SPSs, and landmark and IMC data obtained from the RPMs.

The primary function of OATS is to provide daily computational support for implementing the orbit and attitude and INR process. This support consists of a closed-loop sequence that:

a. Ingests star, range, and landmark observations.
b. Determines spacecraft orbit and Imager and Sounder attitudes.
c. Determines station and sensor intrusions.
d. Predicts eclipses.
e. Computes IMC.
f. Trends image navigation data.

This daily support is performed both for normal operations and special operations, such as during eclipses and after yaw-flip maneuvers.

The second major function of OATS is to support the daily GTACS command-level schedule generation process, generating instrument commands and timing for image frame coordinates and definitions, scheduling starlooks, determining star observation coordinates, predicting solar and lunar exclusion zones and eclipses, and predicting ground station antenna solar intrusions.

The third major function of OATS is to provide the capability to plan, generate command data, and evaluate maneuvers. These maneuvers include daily momentum dumping, periodic station keeping, and repositioning maneuvers. The evaluation includes estimates of the remaining onboard propellant and calibration of the propulsion system.

Finally, OATS requests, accepts, and processes telemetry data to support other functions, such as determination of command parameter values for evaluation of Attitude Control Electronics (ACE) data to verify and calibrate IMC, station keeping and reacquisition support, and evaluation of thruster firing data.

Outputs generated by OATS include the following:

a. Orbit and Imager/Sounder attitude coefficients for the SPS.
b. IMC coefficients uplinked to the spacecraft via GTACS.
c. Star view command data to support Imager and Sounder star sense and sequence operation.
d. Maneuver planning information and spacecraft stationkeeping command data.
e. Commands required for daily reaction wheel momentum dumping.
f. Commands required for thruster flushing.
g. Estimates of onboard propellant remaining.
h. Propulsion calibration parameters.
i. Orbit and station event predictions.
j. Sensor intrusion predictions.

k. Scan frame coordinates conversions.

l. IMC calibration factors.

m. Transformation between the IMC set J2000 and the onboard stellar inertial control true-of-date coordinates.

OATS functions are performed on primary and backup systems at the SOCC, with additional backup systems installed at the CDASs (except FCDAS). The backup systems are maintained with the most current data so that transfer to a backup OATS (either forced due to primary failure or orderly) may occur with little operational interruption. OATS also archives data for later analysis.

1.2.2.6 MRS&S

The MRS&S provides data ingest, seven-day archive, and data service to the DID for the MDL telemetry stream. The MDL stream contains data that can be used in analyzing spacecraft structure dynamic interactions in the DID, complementing instrument telemetry data received by the SPS. The dynamic interaction data include Imager and Sounder North-South and East-West servo error data, Imager IMC data, and Angular Velocity Sensor (AVS) data from the solar array yoke and the optical bench. In addition to these data, the MDL telemetry stream contains up to five other telemetry streams: two PCM telemetry streams (duplicates of the independently downlinked PCM telemetry streams received by NTACTS), the SXI telemetry stream, and, potentially, up to two IO telemetry streams. The MRS&S extracts SXI housekeeping and events packets and sends them to GTACS and can be commanded by GTACS to send either or both PCM streams. In addition, the MRS&S can be configured to stream data to a client, such as at SWPC where SXI Consultative Committee for Space Data Systems (CCSDS) transfer frames are streamed into the SWPC ingest system.

Each MRS&S supports one spacecraft. A modem provides an IF interface to the site RF system from which it receives the MDL telemetry stream as a Quadrature Phase Shift Keying (QPSK) IF signal. The modem demodulates and bit synchronizes the MDL stream and provides a 400 kbps clock and data signal to the MRS&S server. The MRS&S server then frame synchronizes this data to identify the MDL frames and MDL packets, where each MDL frame consists of 128 29-bit MDL packets. Each of these MDL packets contains a four-bit packet header with an associated parity bit and 24 bits of data.

The MRS&S decommutates the MDL-specific (e.g., AVS) data directly from these packets, combining the data samples for each data type into multi-sample blocks with a Ground Receipt Time (GRT) tag applied to the first sample in each block. The time tag for each word in a block is then derived from the first sample's time tag and the nominal downlink frequency of the data type. The MRS&S extracts a limited number of data points in the PCM streams required for real-time analysis by the DID.

The MRS&S demultiplexes the embedded telemetry streams (e.g., SXI, PCM, and IO) back into independent bit streams and then frame synchronizes each of these streams independently. The MRS&S extracts packets from SXI transfer frames, both for MRS&S storage and processing and for

forwarding to other subsystems. The MRS&S forwards SXI housekeeping, event, and memory dump packets to GTACS for further processing and display. The MRS&S can be configured to stream SXI and IO transfer frames and PCM minor frames to other processing systems, such as at SWPC.

The MRS&S may archive entire undefined 29-bit packets (those with an incorrect packet header) and packets resulting from MDL frame synchronization loss as separate data types to permit after the fact "hole filling." These packets are stored in multi-sample blocks that include the GRT of the first packet in the block. The MRS&S also calculates a link BER (Bit Error Rate) based upon the number of bit errors detected in the MDL frame synchronization, fill, and spare data packets (with fixed bit patterns), and parity errors in the 29-bit packet headers.

1.2.2.7 DID

The DID provides data selection, plotting, and analysis tools to measure excessive interaction between mechanical motion events (such as reaction wheel, solar array drive assembly, and Imager/Sounder mirror motion) using data in the MDL telemetry stream. Each copy of the DID can support one spacecraft at a time. The tools provided by this element are used to identify dynamic effects and to support the development of operational scenarios that avoid or minimize such interactions. Using the DID data selection interface, the user can request parameters from an MRS&S for a specified time span or as it is received in real time. Data can be plotted, displayed in tabular form, and exported to other external analysis functions. The DID also provides basic display for HASS data and SXI images extracted from the SXI stream, so that this data can be monitored outside the SWPC.

In addition to its analysis functions, the DID provides the user control interface for the MRS&S. The MRS&S runs independently of the DID, but this interface is used for MRS&S configuration and for archiving data from the limited online MRS&S telemetry archive to local disk or tape.

The DID function runs on workstations shared with other analysis support functions that are independent of the GOES N-P DID, such as SXI Monitoring and GOES I-M DID. The GOES N-P DID function provides similar capabilities to those provided by the GOES I-M DID, but is not cross compatible.

1.2.2.8 SPS

The SPS performs all functions associated with processing Imager and Sounder instrument data from the GOES I-M and N-P spacecraft, one spacecraft per SPS. Functions provided by the SPS include: data ingest, frame synchronization, decommutation by channel, detector scan alignment, and alternate scan line reversal, visible image normalization, IR radiometric calibration, Earth location and Imager gridding annotation, reformatting of instrument data into the GVAR format, computation of Imager and Sounder spacelook, blackbody, electronic calibration and instrument telemetry statistics for inclusion in the GVAR data stream, modulation of the GVAR data stream, and

spacecraft ranging. The SPS modulates the GVAR signal and outputs the signal to the GOES RF system for uplink to the spacecraft.

To support the orbit and attitude determination function of the OATS subsystem, the SPS performs spacecraft range measurements using the GVAR data stream round trip propagation time, performs star crossing event measurements by processing Imager and Sounder star view data, and inserts periodic IMC and servo error data from the sensor data into the GVAR stream. This data is then passed from the RPM to OATS for use in the IMC quality check function.

The SPS sends wideband telemetry data, including command register echo information extracted from the Imager and Sounder data streams and scan position to GTACS at a period of from two to 10 seconds, as long as valid telemetry is being processed in the SPS. The telemetry message data consists of the latest values received for the telemetry words extracted from the telemetry blocks of the Imager turn-around sequence and telemetry words extracted from the Sounder blocks.

1.2.2.9 RPM

The RPM monitors and analyzes the quality of the image and non-image data broadcast in the GVAR data stream. Among these functions are visible detector normalization, Imager visible-to-IR detector coregistration, and IR detector calibration. The RPM feeds back any required changes to the SPS via GTACS.

In support of the orbit and attitude determination function, the RPM provides Imager visible and IR and Sounder visible landmark registration data to OATS. Landmark registration is performed by an automatic or semiautomatic correlation of selected landmark sectors to previously stored landmark sectors referred to as landmark correlation chips. Once correlated, landmark measurement data in the form landmark latitude, longitude and altitude, and the landmark estimated and measured lines and pixels are sent to the OATS. The RPM also extracts the IMC and servo error data included in the GVAR stream for use by OATS in its IMC quality check process.

Each RPM is capable of supporting one GVAR data stream at a time. Normally, one RPM is assigned to process the GOES East GVAR broadcast and another to the GOES West broadcast. Under normal operational circumstances, the RPMs at the CDAS perform only the monitoring function while the RPMs at the SOCC perform the OATS support functions as well as the monitoring functions.

1.2.3 eXtended GOES High Inclination (XGOHI)

Another enhancement that was made was to support a high orbital inclination on GOES-10. This was called eXtended GOES High Inclination (XGOHI). Modifications were made to the SPSs, GIMTACS and GTACS to support this capability. It provides the ability to automatically remap pixel data by operational ground equipment software, providing for better image quality much the same way as what is performed by on-board IMC. This process within the SPS is called “Resampling”. When Resampling is active GVAR pixel data is remapped by the SPS to a fixed grid,

reducing the effects high inclination orbits have on an image scan. This compensates for GOES-10 drifting into a high orbital inclination better than the on-board IMC, which can only handle ~2 degrees of inclination. Resampling with software is expected to compensate for up to ~7 degrees, thereby extending the lifetime and usefulness of the satellite.

At present, GOES-10 and GOES-12 are the only spacecraft to use this function though it may be used for others in the future.

An additional GOES reSampling Unit (GSU) has been added to the SPS that does the actual Resampling. It is also possible to bypass the GSU when starting the SPS software so the GIMTACS/Spacecraft Support Ground System (SSGS) operator should verify that the GSU is running prior to attempting to send Resampling commands. If the GSU is unavailable an event is returned from the SPS when Resampling changes are attempted, but it is best to know this when the mission is underway rather than scheduling another mission or needing to restart the SPS during an image scan.

When the SPS receives a command to turn Resampling on or off, the actual Resampling state will not change until in-between image frames. This keeps the image currently being scanned from having one part remapped and the rest not remapped; otherwise quality of the resulting image would be compromised. Likewise it is important to ensure that the on-board IMC is off when Resampling, since the image would be remapped twice. This would cause overcompensation, making the image as poor as it was when received (only in the opposing direction).

GOES's OATS needs to upload IMC coefficient sets to the spacecraft. In conjunction with this upload, the Orbit and Attitude (O&A) set is sent to the appropriate SPS for Earth location and gridding processing functions by incorporating this information into the GVAR (Block 0) line documentation. This telemetry and gridding information is required by the Resampling software in order to handle navigation and attitude of the GOES spacecraft and to properly remap the image. OATS only does this when it recognizes that IMC is on. This being the case, GIMTACS will notify OATS that IMC is on when Resampling is commanded on. In effect the IMC on indicator for OATS is now a misnomer; it is actually used as a flag indicating that motion is being compensated for; whether by on-board IMC or by the Resampling software.

1.2.4 Instrument and GVAR Format Background

The GOES Imager and Sounder instruments scan East-West (E-W) or West-East (W-E), stepping North to South at the end of each scan swath, and then scanning in the reverse direction. Each Imager scan swath represents from one to eight scan lines depending on the number of detectors in the particular channel. For instance, the visible channel has eight detectors, while the IR channels have either one or two detectors. Sounder scan swaths all comprise four lines since the radiometric detectors consist of four detector arrays. The Imager and Sounder transmit data from each detector continuously while scanning within the commanded image boundaries, interrupting the transmission during scan turnarounds and periodically commanded star senses, spacelooks, and Blackbody

Calibrations (BB-Cal). The instrument data transmitted includes radiometric (detector counts), calibration, and telemetry data.

Instrument images, referred to as frames in OGE documentation, can be of almost any size and duration. An Imager full-disk frame takes about 25 minutes to complete, with smaller images taking commensurately less. The Sounder scans much more slowly so equal size images take longer to generate. For normal operations, the largest Sounder frame is limited to a Continental United States (CONUS) frame, which takes about 53 minutes. The Imager transmits data to the SPS at about 2.6 Mbps and the Sounder at 40 kbps, each transmitted in a separate channel of the Unbalanced, Asynchronous, Quadrature Phase Shift Key (UAQPSK) modulated Sensor Data Link (SDL) downlink.

Due to the difference in instrument data rates, SPS processing and the GVAR format are dominated by Imager data. The GVAR format structure is defined by Imager scan swaths, one GVAR frame (block sequence) per scan swath. As part of its processing, the SPS reformats image data from E-W scans to West-East. The GVAR frame contains one documentation block (Block 0), two blocks (Blocks 1 and 2) of Imager IR data, eight blocks of Imager visible data (Blocks 3 through 10), and a variable number of Block 11s containing all Sounder data and Imager ancillary data. There are 22 types of Block 11s; each type containing different information, such as Sounder scan (image) and documentation data, Imager and Sounder telemetry data, calibration data, text messages, instrument warning messages, and fill data (as necessary to maintain a continuous 2.111360 MBps data stream).

Each block contains a synchronization preamble and a Frame Check Sequence (FCS). After an initial start-of-frame processing delay related to the commanded Imager operating mode, the SPS outputs GVAR frames to the ODAPS at the same rate as scan swaths are completed by the Imager -- about one per second for a full-disk image -- to keep pace with the Imager's scanning rate. Sounder scan swaths can take over one minute, with the prioritization of Block 11s geared to the Sounder's scan swath rate. The GVAR signal from each active SPS is uplinked to its associated GOES spacecraft for broadcast to the SOCC and direct readout stations located within the satellite's footprint.

1.3 External Interfaces

The external interfaces for GIMTACS and SSGS are very similar, although GIMTACS uses TCSs and Comm Controllers, where SSGS uses GTACS. The GIMTACS external interfaces are described in the next section.

1.3.1 GOES I-M External Interfaces (GIMTACS)

OGE external interfaces include the Imager and Sounder raw data downlinks, the GVAR retransmitted processed data uplinks and downlinks, CDAS time code, OGE data communications to and from GIMTACS, Imager and Sounder wideband tape recorder input (test only), various database inputs, and file-oriented inputs and outputs. OGE external interfaces are illustrated in Figure 1-3.

The interface definition includes the electrical characteristics and data format requirements, where applicable.

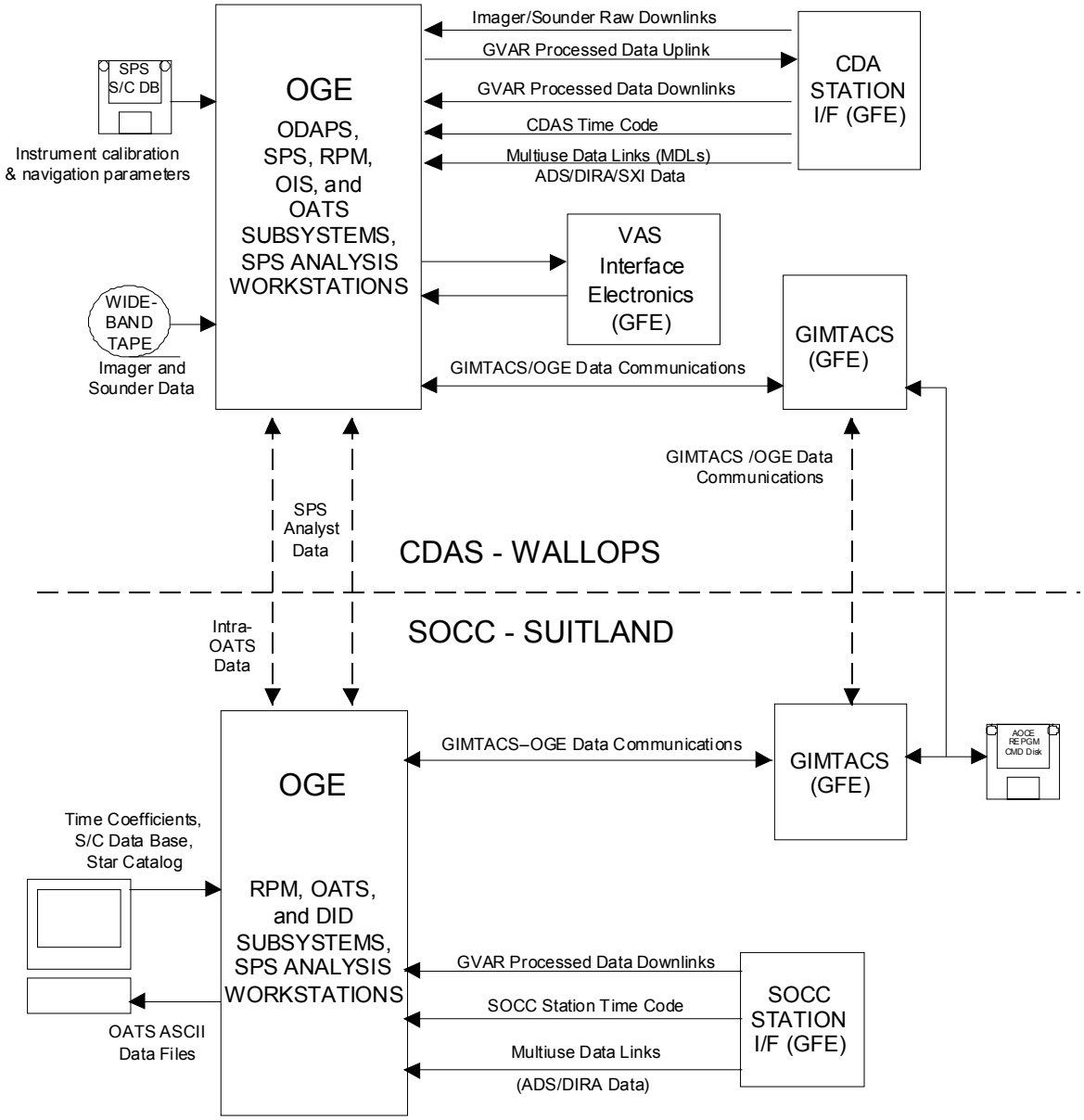

KEY TO ACRONYMS AND ABBREVIATIONS			
AOCE	Attitude and Orbit Control Electronics	I/F	Interface
CMD	Command	REPGM	Reprogram
DB	Database	S/C	Spacecraft
GFE	Government Furnished Equipment	OIS	Offline Instrument Simulator

Figure 1-3. OGE External Interface High-Level Functional Diagram

1.3.2 GOES N-P External Interfaces (SSGS)

SSGS external interfaces include the raw instrument data downlinks, the GVAR retransmitted processed data uplinks and downlinks, Inter-Range Instrumentation Group-Time Code Format B (IRIG-B), command and control data, and various database transactions.

Figure 1-4 is a context diagram identifying the SSGS external interfaces.

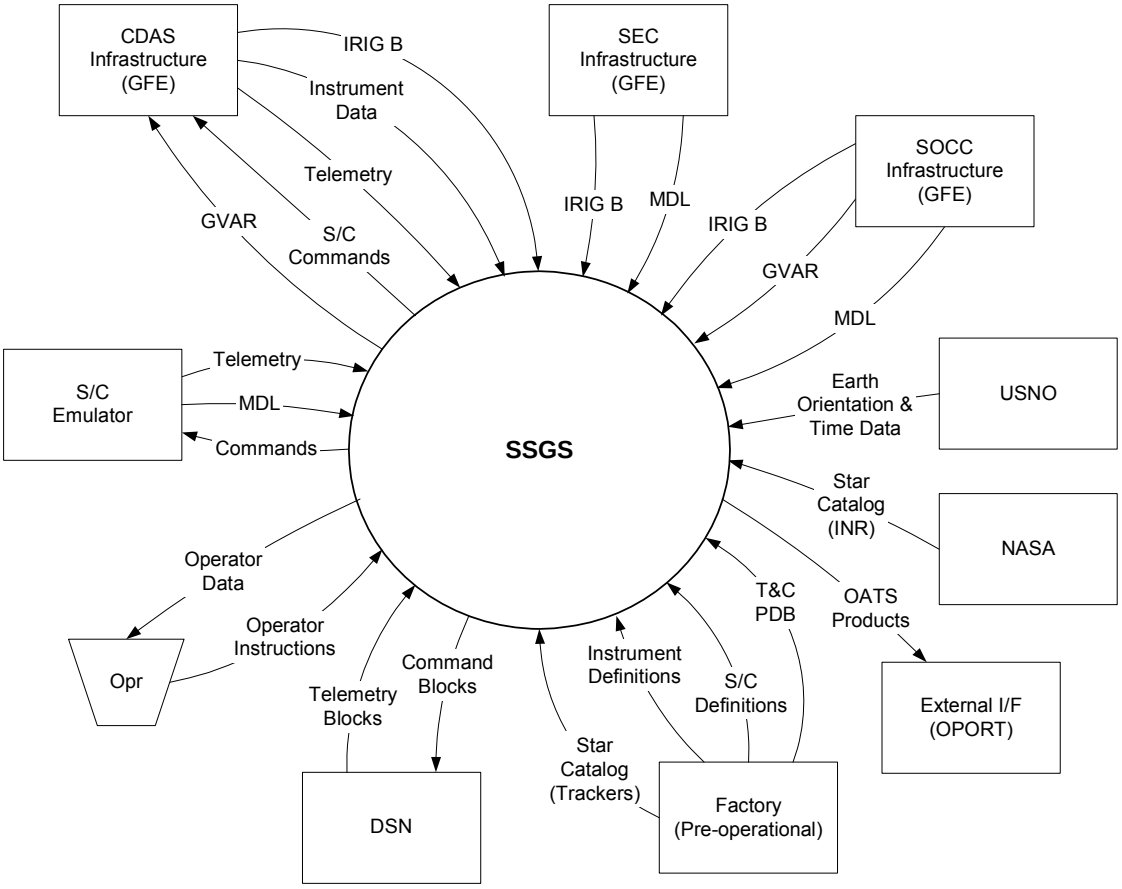

Figure 1-4. SSGS Context Diagram

Figure 1-5 is a diagram of the network fabric consisting of WAN equipment (Ethernet switches, routers), communications equipment (multiplexers), and inter-site trunks (T1 or fractional T1). The overall network fabric is designed to support the control systems for multiple spacecraft. A description of the SSGS network that provides the backbone for implementing the interfaces is provided in more detail in Section 2.0.

All operator interface descriptions, including Graphical User Interface (GUI) interactions for operations and maintenance, are presented and amplified in the element-level design documents and the corresponding user manuals.

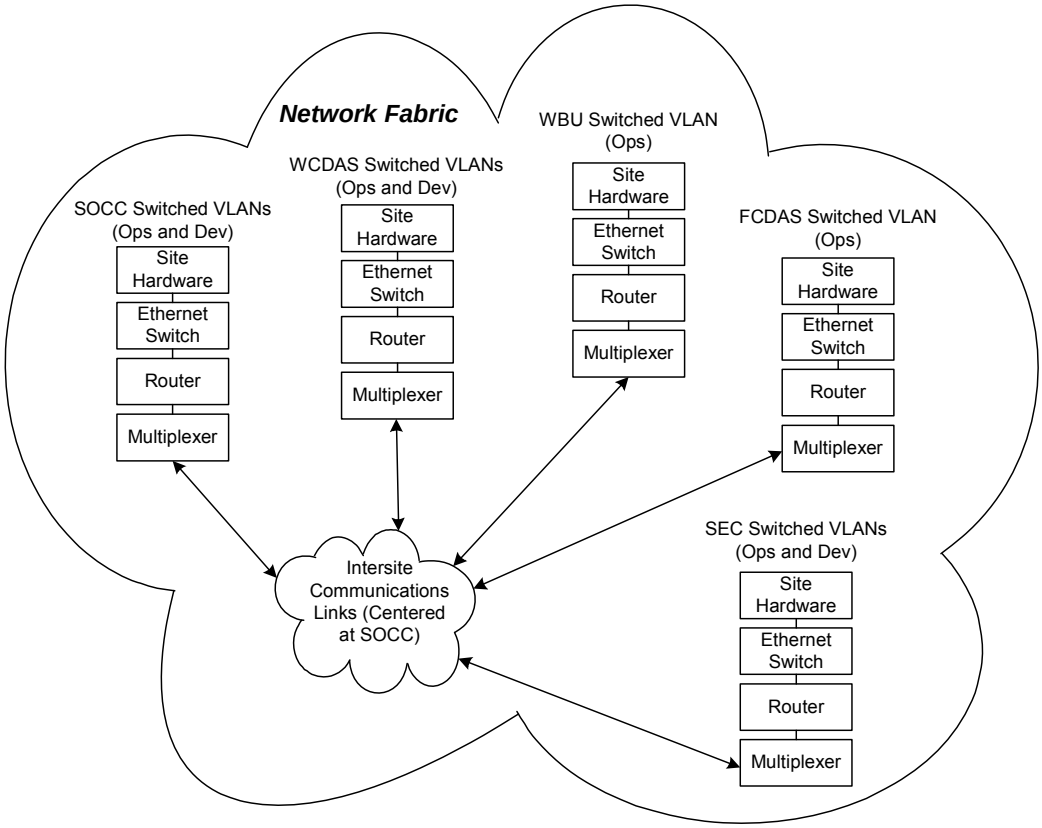

Figure 1-5. Network Fabric Diagram

1.4 Document Contents

This document is organized as follows:

a. Section 1.0 - provides mission background on the GOES I-M and GOES N-P spacecraft and ground systems, an overview of external interfaces, and a list of relevant document references.

b. Section 2.0 - provides the electrical interface characteristics of the OGE external interfaces and the internal SSGS element interfaces.

c. Section 3.0 - provides a definition of the GVAR data format.

d. Section 4.0 - describes the GIMTACS-OGE and SSGS-OGE data communication protocols and external message layouts and formats. Also included is a list of 504-02 messages that are no longer used by SSGS, and a description of the SSGS unique interfaces that do not use 504-02 definitions.

e. Section 5.0 - describes the file formats of database files created externally from SSGS/GIMTACS, and file inputs and outputs, such as the SPS calibration and navigation database and the star catalog used by the OATS.

f. Appendix A. - provides a list of acronyms and abbreviations used in this document.

1.5 Referenced Documents

The following documents, listed in chronological order, are considered a part of this document to the extent specified herein. In case of conflict between a referenced document and this document, this document shall take precedence. The titles of applicable documents that are relevant to this document, but not necessarily referenced, have also been included in the list:

Connectors, Electric, Rectangular, Miniature, Polarized Shell, Rack and Panel, MIL-C-24308.

Electrical Characteristics of Balanced Voltage Digital Interface Circuits, EIA Standard RS-422A-78.

Imager/Sounder to OGE Interface Control Document, SJ-572022.

Destriping GOES Images by Matching Empirical Distribution Functions, Weinreb, M.P., J.X. Johnson (nee R. Xie), J.H. Lienesch, and D.S Crosby, (Remote Sens. Environ 29, 185), 1989.

Operational Calibration of GOES-8 and -9 Imagers and Sounders, Weinreb, M.P., M. Jamieson, N. Fulton, Y. Chen, J.X. Johnson, C. Smith, J. Bremer, and J. Baucom, (Applied Optics, 36, 6895-6904), 1997.

The Standard Calibration, Referred to as Mode 1, Always Includes this Modification, Weinreb, M.P., M. Jamieson, N. Fulton, Y. Chen, J.X. Johnson, C. Smith, J. Bremer, and J. Baucom, (Applied Optics, 36, 6895-6904), 1997.

Orbit and Attitude Tracking System (OATS) Hardware Manual / / GOES IJK/LM OGE Operations and Maintenance Manuals, DRL 504-06, Part 7 of 22, February 14, 1997.

Dynamic Interaction Diagnostic (DID) System Hardware Manual / / GOES IJK/LM OGE Operations and Maintenance Manuals, DRL 504-06, Part 10 of 22, (G007), SMS-OATS-0008R0UD0, April 14, 1997.

Command, Ranging & Telemetry Unit (CORTEX^{NT}) Generic Ethernet Interface, Rev. 4, STI 100013, Is. 2, 15 September 1998.

NT Programmable Telemetry Processor (PTP) for Windows NT User's Manual, *Version 1.40* (Avtec Systems, TM 98-05-01), November 1998.

AV_PTP Programmable Telemetry Processor (PTP) Remote Interface Library Programmer's Guide, Version 1.40 (Avtec Systems, TM 99-004), January 1999.

GOES N-P Boeing Spacecraft Emulator to SSGS ICD, *Draft C,* (ISI-NQ-SSGS-0014), December 1999.

GOES N Telemetry & Command Handbook, *Rev. A* (BSS, CDRL DID #SDA-3.2.9-02), May 7, 2001.

Product Specification for the GOES N-P Spacecraft - Spacecraft to Ground Database ICD, *Rev. D* (BSS, DS80667-S00-003), 6 October 2004.

GOES N-P SSGS System Installation Plan, *Revision C,* (G304), (ISI-NQ-SSGS-0002), October 2007.

NOAA/NESDIS GOES I-M, Earth Location User's Guide (ELUG), Revision 2, (G026), NOAA-GOES/OSD3-1998-015R2UD0, July 29, 2005.

Orbit and Attitude Tracking System (OATS) User's Manual // GOES IJK/LM OGE Operations and Maintenance Manuals, DRL 504-06, Part 16 of 22, (G016), NOAA-GOES/OSD-1999-0032R0UD06-9.4, (DCN 6 change pages, dated March 30, 2007).

Orbit and Attitude Tracking System (OATS) Software Maintenance Manual / DRL 504-06, Part 22 of 22; Vols. 1-4, (G022) NOAA-GOES/OSD3-1998-0013R0UD1-9.4, September 28, 2007.

GOES N-P SSGS MRS&S to Client Interface Control Document, *Revision E*, (G270), (ISI-NQ-MRS&S-0012), October 2007.

GOES N-P SSGS GAS-GAIM Interface Control Document, Revision A, (G262), (ISI-NQ-GTACS-0006), October 2007.

GOES N-P SSGS, OATS Hardware Operations and Maintenance Manual, Revision C, (G280), (ISI-NQ-OATS-0004), October 2007.

NOAA/NESDIS GOES Replacement Product Monitor (RPM) Hardware Maintenance Manual, Revision 2, (G025) NOAA-GOES/OSD-2003-0053R2UD0, January 15, 2008.

NOAA/NESDIS GOES Sensor Processing System (SPS) Hardware Operation and Maintenance Manual, Revision 3, (G239), NOAA-GOES/OSD-2004-0057R3UD0, August, 28, 2008.

NOAA/NESDIS GOES Replacement Product Monitor (RPM) Software Maintenance Manual, Revision 2, (G049), NOAA-GOES/OSD-2004-0054R2UD0-5.0, August 29, 2008.

NOAA/NESDIS GOES Sensor Processing System Software Maintenance Manual, Revision 4, (G240), NOAA-GOES/OSD-2004-0058R4UD0-8.5.1, February 23, 2009.

NOAA/NESDIS GOES Replacement Product Monitor (RPM) User's Manual, Revision 4, (G141), NOAA-GOES/OSD-2002-0051R4UD0-5.3, February 28, 2009.

NOAA/NESDIS GOES Software Processing System (SPS) User's Manual, Revision 4, (G238) NOAA-GOES/OSD-2004-0056R4UD0-8.5.1, March 23, 2009.

NOAA/NESDIS GOES-NOP SSGS Orbit and Attitude Tracking System (OATS) User's Manual, (G278), NOAA-GOES/OSD-2010-0001R0, February 1, 2010.

NOAA/NESDIS GOES-NOP SSGS Orbit and Attitude Tracking System (OATS) Software Maintenance Manual, Volumes I and II, (G279a&b), NOAA-GOES/OSD-2010-0002R0, March 1, 2010.

GOES Solar X-Ray Imager (SXI) Telemetry and Command Handbook, Revision B, (G398) (LMSAL SXI98-0767, Doc. No.: 2A06516), August 13, 2010.

1.6 Document Maintenance

This document has been reviewed and approved by the GOES Software Lead and is under baseline control by the Document Control Office (DCO) through the Configuration Management Office (CMO) Document Configuration Change Request (DocCCR) process. The document resides in the SATOPS Intranet OSD/OSPO eLibrary, which is the official baseline repository for Office of Satellite and Product Operations (OSPO).

Future revisions to this document will be produced and controlled by National Oceanic and Atmospheric Administration (NOAA)/National Environmental Satellite, Data, and Information Service (NESDIS). If you have changes to this document, download the Microsoft Word file of this publication from the SATOPS OSD/OSPO eLibrary and use it as the basis for the next version without exception. Track changes must be turned on to identify all changes specified in related DocCCRs.

Section 2.0 OGE Electrical Interface Characteristics

This section describes the OGE external interface electrical signal characteristics, the physical interconnections, and data characteristics as appropriate for the SSGS external interfaces.

2.1 Time Code Interface

GIMTACS/SSGS and the various OGE subsystems use the commercial standard IRIG-B time code standard as a reference. Electrical signal characteristics of the time code reference are as follows:

a. IRIG-B has a time frame update rate of 1 second with an index count of 10 milliseconds and contains time-of-year and year information in a Binary Coded Decimal (BCD) format, and seconds-of-day in Straight Binary Seconds (SBS).

b. The station time code is received as a 100 pps Pulse Width Modulated (PWM) signal. This signal is amplitude modulated on a 1000 Hz carrier, providing a timing resolution of 1 msec.

In the case of the SPS, an external Input/Output (I/O) panel within the SPS provides station time code interconnections. Each SPS provides one Bayonet Neill-Concelman (BNC) connector for the IRIG-B CDA station time code interface. This interface consists of a Radio Grade (RG) 223/U (50-ohm) coaxial cable with mating BNC connectors.

NTACTS interconnections are provided through the CORTEX^{NT} Connector Interface Panel (CIP). Each NTACTS provides one BNC coaxial connector for the IRIG-B CDAS time code interface. A coaxial cable from the CDAS time code source is connected to each NTACTS I/O panel. This consists of RG 223/U (50-ohm) coaxial cable with mating BNC connectors.

MRS&S servers, GTACS servers, GTACS workstations, and OATS workstations obtain an IRIG-B-derived time reference from a Datum TymServer 2100 via LAN (TCP/IP) interface using Network Time Protocol (NTP).

MRS&S also provides one optional BNC coaxial connector for the IRIG-B station time code interface for each server at SOCC, SWPC, and CDAS. The interface consists of an RG 223/U (50-ohms) coaxial cable with mating BNC connectors into a Datum PCI Time & Frequency Processor (Model bc635PCI).

2.1.1 Local Clock Synchronization Using NTP

The system NTP server, a Datum TymServer 2100, uses the IRIG-B time code as its time reference and maintains the clock without operator intervention. System elements that use NTP poll the system NTP server via the LAN to maintain local clock synchronization. Based on the time stamped NTP packets received, the system element determines the need for any time offset correction. Clock adjustment methods include advancing, retarding, or resetting the clock in accordance with the

direction and magnitude of the discrepancy. The MRS&S servers, GTACS servers, GTACS workstations, and OATS workstations use NTP to keep their local clocks synchronized.

2.2 Imager and Sounder Raw Instrument Data Downlink Interface

The Imager and Sounder raw instrument data downlinks are received and converted by the CDAS RF system to an IF of 56.0 Megahertz (MHz). Each 56.0 MHz IF Imager or Sounder downlink is then routed to the ODAPS through the CDAS IF switching and patching equipment. At the ODAPS the UAQPSK Non-Return to Zero Space (NRZ-S) signal is demodulated by an SRI SDL demodulator and input to the SPS as separate Imager and Sounder serial data streams.

The physical interface requirement for the Imager and Sounder downlink data interface is as follows:

a. The ODAPS provides physical interfaces for four Threaded Navy Connector (TNC) coaxial connections, one for each downlink, through an I/O panel mounted within the subsystem.

b. Each 56.0 MHz IF interface, as presented to the SRI SDL demodulator, consists of a coaxial cable interface specified as follows:

   1. TNC coaxial connector at the CDAS end (Part No. S/M 4000-0010).

   2. RG 223/U coaxial cable.

2.3 GVAR Uplink and Downlink Interface

The SPS provides two outputs of the GVAR uplink signal as an NRZ-S, bi-phase-modulated data stream at an IF of 67.7 MHz. The CDAS RF system up-converts this signal to 2027.7 MHz and transmits it to the assigned GOES satellite. At the satellite, the GVAR uplink is translated to a frequency of 1685.7 MHz and broadcast by way of an Earth coverage antenna. Both the SOCC (DUS) and CDAS RF systems receive the GVAR broadcast and convert the signal to an IF of 65.7 MHz.

At the CDAS, the received GVAR signal is routed through the ODAPS to one of the SRI SD-4220 demodulators, where the signal is demodulated, bit and frame synchronized, and output in the RS-422 data/clock format to a patch panel where it can be patched to any of the RPMs and SPSs. (The backup CDAS is a single string, capable of supporting only one satellite at a time.)

The physical signal interface requirement for GVAR uplink and downlink interfaces at the Wallops CDA are as follows:

a. The ODAPS provides six GVAR IF downlink interfaces and six GVAR IF uplink interfaces.

b. All GVAR IF uplinks and downlinks are coaxial cable interfaces and are physically connected by way of an I/O panel located within the ODAPS. These cable interfaces are specified as follows:

   1. TNC coaxial connector (Part No. S/M 4000-0010) at the CDA station end.
   2. RG 223/U coaxial cable.

2.4 GOES I-M Interfaces (GIMTACS)

GIMTACS uses a mix of DECnet and TCP/IP for communications between the different components and is described in the next section.

2.4.1 GIMTACS Data Communications Interfaces

The data communications interface between GIMTACS and the OGE OATS subsystems is a 10 Mbps Ethernet LAN. The DECnet software package is used for communication between the various GIMTACS components and their communication with OATS. The physical interface with the OATS is described in the *Orbit and Attitude Tracking System (OATS) Hardware Manual / / GOES IJK/LM OGE Operations and Maintenance Manuals*, DRL 504-06, Part 7 of 22. Additional information regarding the connectivity between GIMTACS and OATS is found in Section 4.2.

The RPM and SPS exchange data with GIMTACS via Ethernet using TCP/IP. GIMTACS sends received messages to the appropriate destinations based on message IDs as defined in Section 4.0.

2.5 GOES N-P Interfaces (SSGS)

SSGS uses TCP/IP for all communications between the different components and is described in the next section.

2.5.1 SSGS LAN/WAN Interface

An Ethernet LAN/WAN provides the interface between and within the GOES N-P SSGS elements. All GOES N-P SSGS hardware components use TCP/IP for intercommunication. The LAN is divided into multiple independent VLANs, which present themselves as separate physically separate LANs. There are two VLANs for N-P, the OPs VLAN and the Dev VLAN. Each has independent IP address spaces defined. Each site also has independent address spaces defined. All SSGS components physically interface to the LAN via female RJ45 connectors.

2.5.2 GTACS Interfaces

GTACS interfaces with other SSGS components via Ethernet TCP/IP; the physical connections from GTACS components to the LAN are provided by female RJ45 connectors.

Figure 2-1 shows the interfaces between the GTACS servers and other SSGS components.

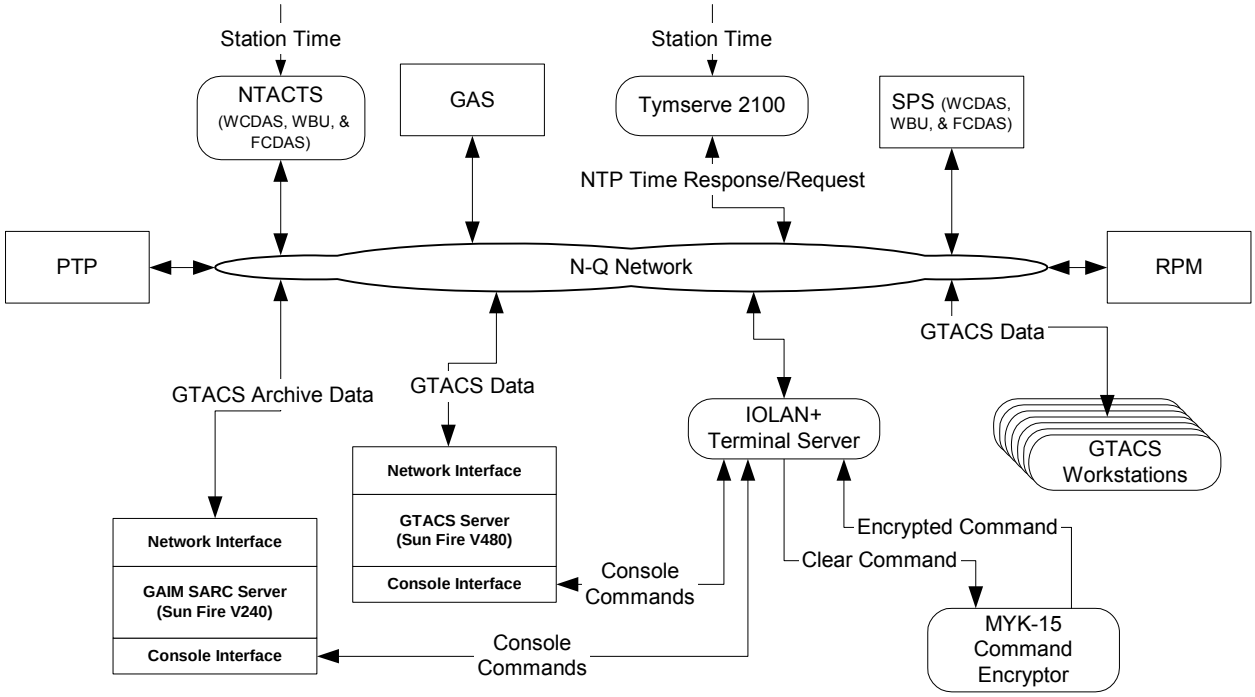

Figure 2-1. GTACS Interface Diagram

2.5.2.1 GAS/GTACS Interface

The interface between GTACS and the GAS is via Ethernet TCP/IP. GTACS archive support is provided by two redundant GAIM. The data interface between the GAIM and the GAS is defined in the *GOES N-P SSGS GAS-GAIM Interface Control Document*. Figure 2-2 shows the network layout of the GAS/GAIM systems.

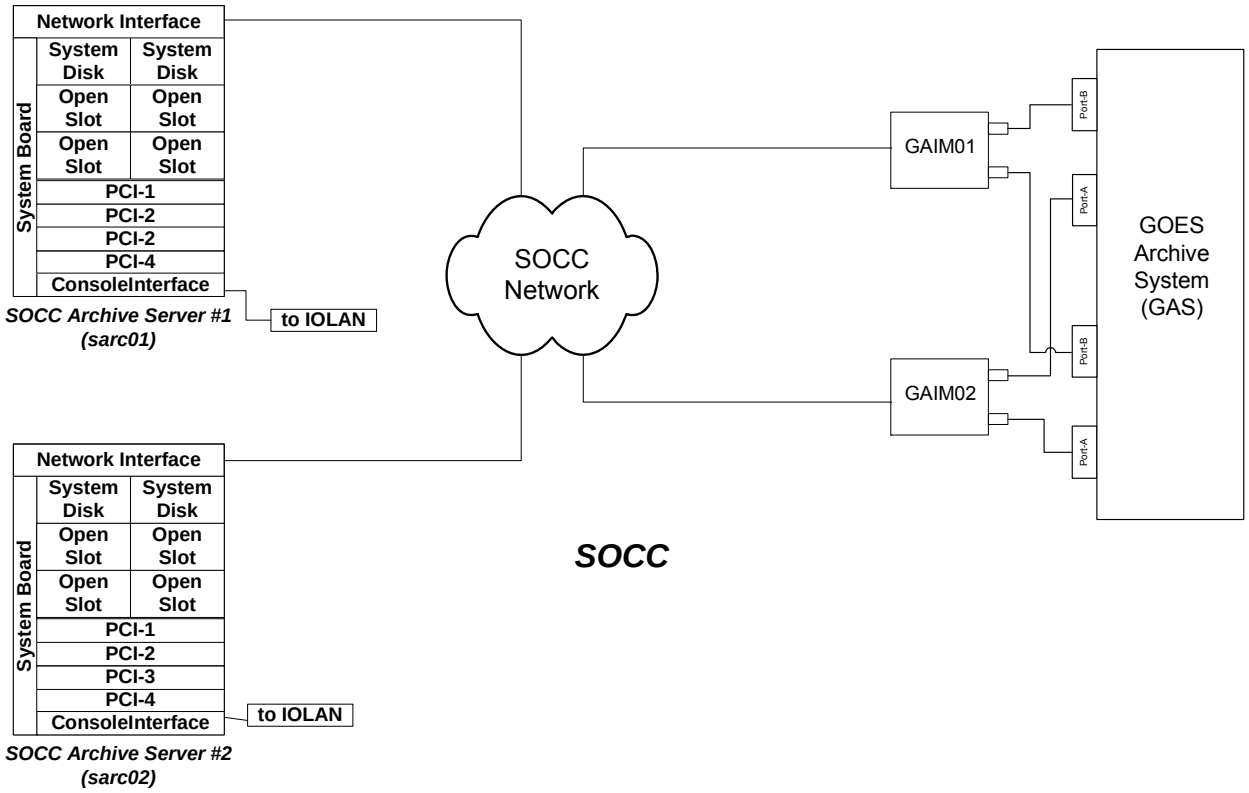

Figure 2-2. GAS/GTACS Interface Diagram

2.5.2.2 DSN/GTACS Interface

An interface between the DSN and the SSGS supports operations during the Launch and Orbit Raising (LOR) phase of the mission and in operational contingencies. Nominally, this interface is used only until spacecraft telemetry receipt and command uplink is assumed by the CDASs. Thereafter, this capability can be used for contingencies and emergencies, depending on the availability of ground station support. The SSGS receives 1694 MHz PCM telemetry, ranging data blocks, and DSN monitor blocks from the ground station and sends spacecraft commands to the ground station for uplink.

The infrastructure for data transfer between the NOAA sites and DSN is provided by Nascom. The choice of protocols and the paths for data routing used by Nascom and DSN internally are transparent to the GOES N-P SSGS.

An Avtec Programmable Telemetry Processor (PTP), a Commercial-Off-The-Shelf (COTS) NT PC-based interface and protocol conversion device, provides interface protocol conversion within the SSGS between Nascom and GTACS. Data transfer between the PTP and Nascom is via RS-422 clock and data. Data transfer between the PTP and GTACS is via TCP/IP socket interfaces. The PTP also provides Nascom block encapsulation of commands sent and de-encapsulation of data received.

Figure 2-3 provides a schematic view of the data exchange between DSN and the GOES N-P SSGS. Additional information about the PTP can be found in the *AV_PTP Programmable Telemetry Processor (PTP) Remote Interface Library Programmer's Guide* and the *NT Programmable Telemetry Processor (PTP) for Windows NT User's Manual*.

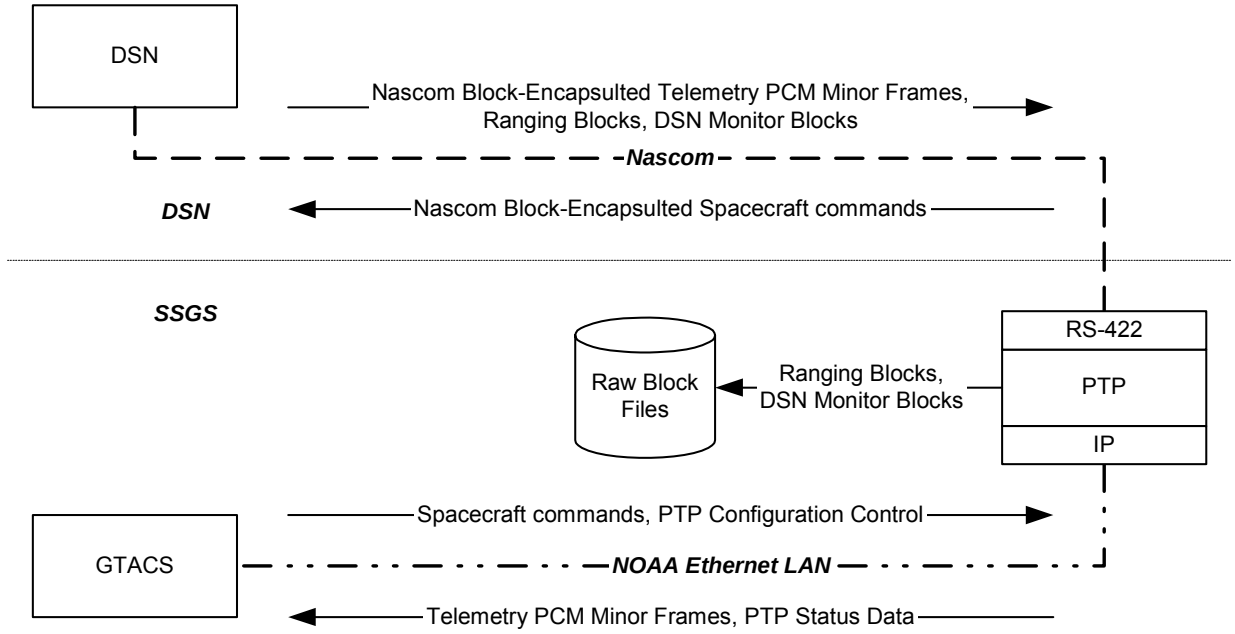

Figure 2-3. PTP Interface Diagram

2.5.2.2.1 PTP Interfaces

The PTP presents two independent data interfaces, one with Nascom (for communication with DSN) and one with the SOCC LAN. The PTP exchanges data with Nascom using the RS-422 protocol. This interface is provided by a DB37 female connector on a bulkhead panel at the back of the rack. Figure 2-4 shows the pin out for this connection.

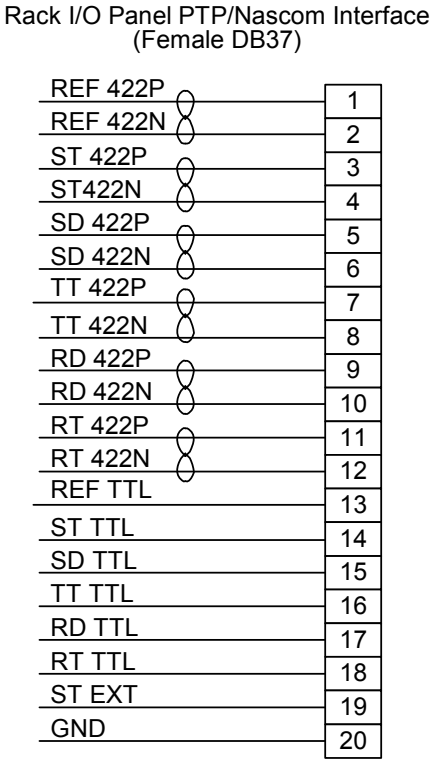

Figure 2-4. PTP Nascom Interface Connector Diagram

2.5.2.2.2 PTP Configuration

The PTP must be configured to establish data service with a specific ground station. This configuration is performed by GTACS and consists of four parts:

a. Operator selects a PTP as the spacecraft telemetry and command interface for a stream.

b. GTACS establishes socket connections to the PTP – GTACS connects to the PTP to establish a control and monitor socket, a telemetry socket, and a command socket. Only one GTACS can establish control or command sockets with a PTP. Non-prime GTACS streams establish only telemetry sockets. These connections are maintained only while PTP support is required. The PTP message structures used to configure and monitor a PTP are documented in the *AV_PTP Programmable Telemetry Processor (PTP) Remote Interface Library Programmer's Guide*.

c. Selection of desktop – The PTP supports the acquisition, processing, and routing of multiple, simultaneous data streams using a combination of software modules, I/O boards, and PC peripherals. PTP data acquisition and processing is completely software configurable. The PTP desktop specifies the PTP modules to be used to perform the Nascom interface processing required for the GOES N-P SSGS. The desktop is a controlled configuration file and is loaded by instruction from GTACS.

A default desktop is loaded at PTP boot. The PTP modules used for GOES N-P SSGS support are:

1. Nascom Blocker (blocks data into Nascom Blocks)
2. Nascom Deblocker (extracts data from Nascom Blocks)
3. Socket (provides TCP/IP socket service)
4. Serial Input
5. Serial Output
6. Recorder (records data to file).

e. Identification of spacecraft and ground station – Nascom Block headers include data fields that identify the spacecraft and source and destination ground stations. These are used by the PTP for data filtering and by Nascom for block routing. The ground station IDs are defined in Table 2-1. Spacecraft IDs are defined in Table 2-2.

Table 2-1. Nascom Station Mnemonics and Source Codes

Station Mnemonic	Station Name	DSN ID	Antenna (meters)	Source/ Destination Code (Octal/Hex)
AGO	Santiago, Chile	DSS74	9	010/08
KSC	Antigua	DSS99	10	116/4E
DGS	Diego Garcia (CSTC-0NIZUKA AFB)	DSS31	10	244/A4
MIL	Merrit Island	DSS79	9	001/1
MIL-71	Merrit Island (DSN test)	DSS72	6	003/3
PRTS	Perth, Australia	DSS84	15	047/27
D16	Goldstone, CA	DSS16	26	204/84
D17	Goldstone, CA	DSS17	9	333/DB
D24	Goldstone, CA	DSS24	34	311/C9
D27	Goldstone, CA	DSS27	34	346/E6
D34	Canberra, Australia	DSS34	34	232/9A
D45	Canberra, Australia	DSS45	34	224/94
D46	Canberra, Australia	DSS46	26	225/95
D54	Madrid, Spain	DSS54	34	365/F5
D65	Madrid, Spain	DSS65	34	375/FD
D66	Madrid, Spain	DSS66	26	366/F6
D08	JPL DTF21 (DSN test facility)		26	146/66
D09	JPL DTF21 (DSN test facility)		34	275/BD
CDA	NOAA/Wallops (I-M)		18	103/43
GOC	Suitland NOAA SOCC SOC			370/F8
ISI	Integral Systems, Inc. 5000			235/9D
NOA	GOES GOC			114/4C
SOC	NASA/GSFC Bldg 25 SOC			64/34
SOCWAL	NOAA SOCC	NOA		321/D1
USN	Universal Space Network			255/AD
WBU	NOAA Wallops Backup		15	361/F1
WCDA	NOAA CDA N-P			006/06
PTP #3	Dev Rail			236/9E

Table 2-2. Nascom Block Header Spacecraft IDs

Spacecraft	Spacecraft ID (Octal/Hex)
GOES-N	013/0B
GOES-O	017/0F
GOES-P	021/11

2.5.2.2.3 Data Received by the PTP from Nascom

The PTP receives all data from the Nascom interface as 4800 bit Nascom Blocks. The PTP synchronizes the Nascom Blocks and then filters them for further processing based on the Source Identification (ID), Destination ID, and Spacecraft ID in the Nascom Block header. Figure 2-5 provides the Nascom Block layout, including its header fields. The PTP processes the following three types of Nascom Blocks that meet the other filtering criteria:

Telemetry Blocks

The PTP receives the 1694 MHz telemetry stream as synchronized 4096-bit minor frames encapsulated in 4800 bit Nascom Blocks (telemetry format). There is exactly 1 minor frame per Nascom Block, with the minor frame starting at the beginning of the data field of the Nascom Block. The PTP extracts each minor frame from its Nascom Block and transfers it to GTACS via a TCP/IP socket connection.

Ranging Blocks

The PTP receives Ranging Nascom Blocks and, if selected operationally, stores these blocks as a binary data file on its local disk drive. These files must be deleted periodically to prevent the PTP disk drive from filling up.

DSN Monitor Blocks

The PTP receives DSN Monitor Nascom Blocks and, if selected operationally, stores these blocks as a binary data file on its local disk drive. These files must be deleted periodically to prevent the PTP disk drive from filling up.

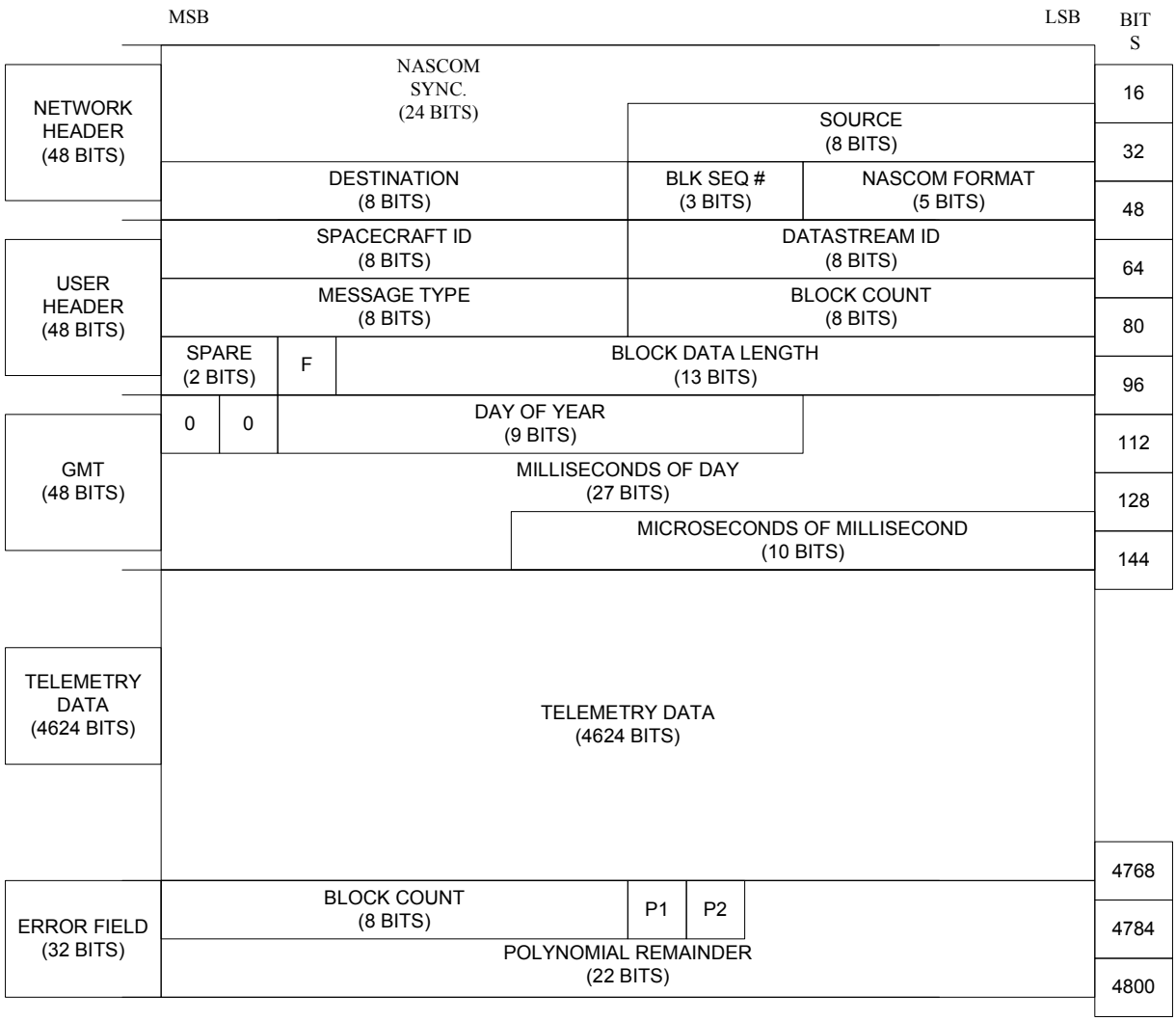

Figure 2-5. Nascom Telemetry Block Format

2.5.2.2.4 Data Sent by the PTP to Nascom

The PTP accepts formatted spacecraft commands ready for uplink from the GTACS that is prime for a stream. The PTP inserts one command per output command Nascom block, sets the source, destination, and spacecraft IDs in the Nascom block header, and transmits the command to the Nascom interface. The PTP does not do any other processing on the command.

2.5.2.2.5 Data Received by the PTP from GTACS

The PTP receives two classes of data from GTACS, PTP control/configuration and spacecraft commands. The PTP receives all data from GTACS via TCP/IP. Only a single GTACS can establish connections with a PTP for spacecraft commanding. GTACS opens a separate socket dedicated to commanding with the PTP. The socket remains open until closed by that GTACS. Commands sent by GTACS to the PTP are ready for uplink to the spacecraft as described above.

The PTP sends two classes of data to GTACS, PTP configuration/status monitor data and spacecraft PCM telemetry minor frames. The PTP sends all data to GTACS via TCP/IP. Multiple GTACS servers can establish connections with a PTP for receiving spacecraft telemetry. However, the GTACS that is prime for a spacecraft must connect to a PTP first in order to establish the control and monitor socket. Each GTACS opens a separate socket dedicated to receiving telemetry from the PTP. The socket remains open until closed by GTACS. The PTP extracts each minor frame from its Nascom Block and transfers it to each connected GTACS. The PTP does not do any other processing on the minor frame.

2.5.3 NTACTS Interfaces

The WCDAS, WBU, and FCDAS send/receive systems consists of antennas, RF and IF equipment, and associated interfaces to the NTACTS for the telemetry and command links. Each NTACTS has interfaces consisting of the following:

a. Two IF telemetry interfaces from the NT1694 and NT2209 telemetry stream RF equipment to the NTACTS telemetry IF receivers.

b. One IF command interface from the NTACTS command modulator to the RF equipment.

c. One Ethernet interface (100 BASE T) from the NTACTS to the NOAA LAN.

d. One time code interface from NTACTS to the IRIG-B time code reference.

e. Two telemetry and one command Time To Live (TTL) clock and data interfaces, optionally connected to a BSE.

Figure 2-6 is a high-level interface and architecture diagram for NTACTS. GOES N-P has two PCM streams, NT1694 and NT2209. Although both streams can be received at the CDASs, during nominal operations the spacecraft will transmit only the 2209 MHz stream to avoid frequency conflict with DSN.

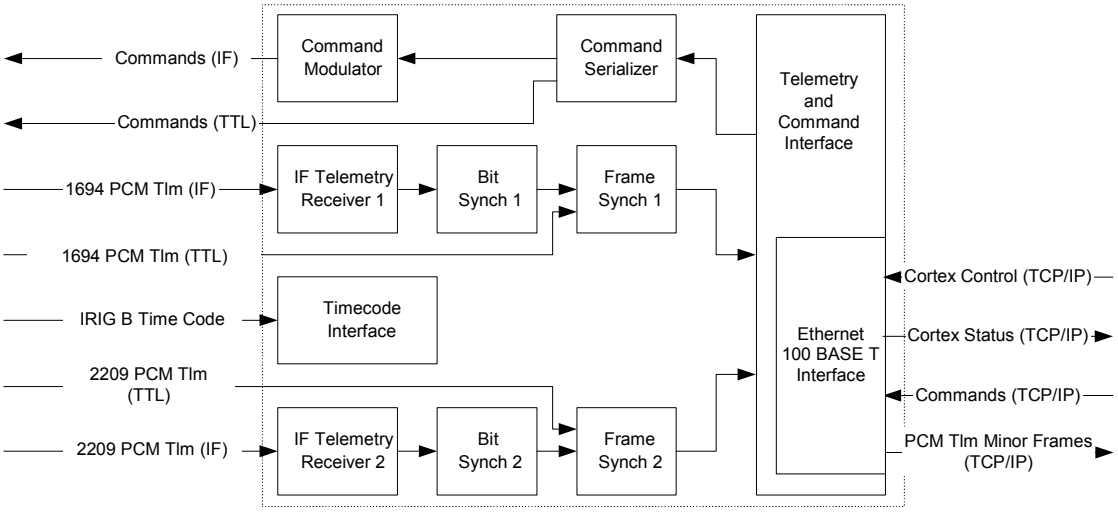

Figure 2-6. NTACTS Interfaces

Each NTACTS provides telemetry receipt and command uplink services for one spacecraft. Multiple GTACS can connect to a specific NTACTS to request telemetry data services. NTACTS will allow only one GTACS at a time to have spacecraft command access. NTACTS also allows only one GTACS at a time to have control and configuration access for that NTACTS.

The INSNEC CORTEX^{NT} provides the complete functionality of NTACTS. Details of CORTEX^{NT} interfaces are in the *Command, Ranging & Telemetry Unit (CORTEX^{NT}) Generic Ethernet Interface* document. The CORTEX^{NT} is a PC based platform based on the Window NT 4.0 operating system. The following signals are provided by the CORTEX^{NT}:

a. S/C Telemetry Input 2 (IF Demodulator Input 2).
b. S/C Command Output (IF Modulator Output).
c. S/C Telemetry Data (Frame Sync Input).
d. S/C Telemetry Clock (Frame Sync Input).
e. S/C Telemetry Data (Bit Sync Output).
f. S/C Telemetry Clock (Bit Sync Output).
g. S/C Command Baseband (Command Modulator Output).
h. S/C Command Data (Command Generator Output).
i. S/C Command Clock (Command Generator Output).

Each of these signals is accessible through a 50-ohm BNC termination at the back panel of the unit.

2.5.3.1 Telemetry Downlink Interface

The CORTEX^{NT} demodulates the PCM1 (NT2209) and PCM2 (NT1694) telemetry streams, frame synchs, bit synchs and processes the telemetry data, and makes it available to GTACS over the GOES N-P Ethernet LAN. The main signal processing board reads the IRIG-B time code and time stamps the last bit in the minor frames of each of the telemetry streams. Digital telemetry inputs and a digital command output are provided for the spacecraft emulator. Each NTACTS CORTEX^{NT} chassis supports two 50-ohm IF BNC tuned to 74 MHz and 69.086 MHz at –20-dBm nominal input power. Table 2-3 contains a description of the PCM telemetry stream characteristics that are received and processed by CORTEX^{NT}.

Table 2-3. PCM Telemetry Stream Characteristics

	NT2209 (PCM 1)	NT1694 (PCM 2)
Subcarrier Frequency	1.024 MHz +/- 0.003%	None
Subcarrier Modulation	Phase Modulation	None
Subcarrier Modulation Index	1.0 radians +/- 10%	None
Baseband Modulation	BPSK	PSK
Baseband Modulation Index	+/- 90 deg +/- 0.5 deg	+/- 1.1 radians +/- 5%
PCM Format	Manchester	Manchester
Bit Rate	1-4000 bps +/- 0.1%	1-4000 bps +/- 0.1%
IF Frequency	69.086 MHz	74 MHz
Nominal IF Input Level	–20 dBm	-20 dBm

2.5.3.2 Command Uplink Interface

The IF modulator board processes the commands received over the GOES N-P LAN from GTACS, performs phase modulation, converts the command to an IF signal, and forwards this signal to the RF equipment for uplink to the GOES spacecraft. Each NTACTS CORTEX^{NT} chassis supports one 50-ohm IF BNC tuned to 74.2 MHz at 0 dBm nominal output power. The command uplink characteristics are described in Table 2-4.

Table 2-4. Command Uplink Characteristics

Subcarrier Frequency	16 kHz +/- 0.135%
Subcarrier Modulation	Phase Modulation
Subcarrier Modulation Index	1.0 radians +/- 10%
Bit Rate	2000 bps +/- 0.135%
Baseband Modulation	BPSK
Baseband Modulation Index	+/- 90 degrees +/- 0.5 degrees
Command Format	NRZ-L
IF Frequency	74.2 MHz
Nominal IF Output Level	0 to –13 dBm

2.5.4 MRS&S External Interfaces

One MDL stream per spacecraft is received and down-converted at the sites by CDAS receive equipment to an IF of 61.48 MHz. Each MDL signal is routed to an MRS&S via a rack-mounted IF patch panel. The MDL downlink is balanced QPSK modulated. Each MRS&S consists of two pieces of hardware: MRS&S modem that performs demodulation and recovery of the original 400 kbps MDL signal; a headless UNIX server provides further processing and archive of the digital signal generated by the modem.

2.5.4.1 Physical Characteristics

The physical interfaces for each MRS&S are described below. A schematic of these interfaces are provided in Figure 2-7:

1. Each site-to-MRS&S interface consists of a coaxial cable built to the following requirements:
   a. Type TNC coaxial connector at site end (part number S/M 4000-0010).
   b. Type RG 223/U coaxial cable to the rack IF patch panel.

2. IF for one MDL stream enters an MRS&S modem for demodulation and bit synchronization. The resulting 400 kbps digital serial clock-and-data signal output by the modem is distributed via a rack-mounted data patch panel into an Engineering Design Team (EDT) card mounted internally within an MRS&S server.

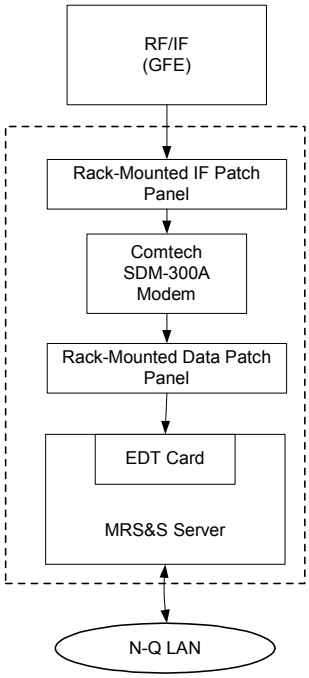

Figure 2-7. MRS&S Interfaces

2.5.4.2 MDL Data Format

The MRS&S server receives MDL as a 400 kbps, QPSK, NRZ-L, IF signal, with no Pseudo-random Noise (PN) encoding. After demodulation, the MDL bit stream consists of QPSK modulated bit pairs with an eight-fold phase ambiguity. Table 2-5 defines the eight QPSK phase cases recognized by the MRS&S; the "prime" symbol in the table indicates that the primed bit in the raw data stream is inverted (0/1 or 1/0). The MRS&S uses the first 28 of the 29 available bits of the frame sync to determine phase identification. The spacecraft always transmits the leading bit of the frame sync pattern in bit I of an IQ pair. The bit inversion and reversal for the identified QPSK receipt phase is subsequently applied to all MDL data until frame sync is lost.

Table 2-5. Definition of Eight MDL QPSK Phase Cases

I,Q	Q,I'	Q,I	I',Q
Q',I	I',Q'	I,Q'	Q',I'

The MDL data format is as follows:

a. An MDL frame consists of 128 packets, each 29 bits long, for a total frame length of 3712-bits (464 bytes).

b. Each packet consists of three fields: a 4-bit packet type ID header, 1-bit static parity field (for the ID header), and a 24-bit data field.

Each frame begins with a sync packet to establish frame synchronization. Other packet types are inserted into the MDL stream according to a sampling order which maintains the correct bit rates for those data types. Fill packets are inserted as required to maintain a constant gross 400 kbps telemetry rate.

All MDL packets share the same basic layout. There are two variations in the layout of the 24-bit packet data field.

Figure 2-8 shows the specific packet layout used for frame synch, NT1694, NT2209, SXI Image Data, instruments of opportunity (one type for each), and fill packet types. The PCM, SXI Image, and instrument of opportunity packet types from this group must be passed on for further processing to recover the original streams for resyncing.

BIT 28 – 25	24	23 – 0
Packet Type ID Header	Parity	Data

Figure 2-8. Packet Layout for Frame Synch, NT1694, NT2209, SXI Image Data, Instrument of Opportunity, and Fill Packet Types

Figure 2-9 shows the packet layout used for Imager Servo Error, Imager IMC Data, Sounder Servo Error, and AVS Data Type 1-3 packets.

BIT 28 – 25	24	23 – 12	11 – 0
Packet Type ID Header	Parity	Data Item 2	Data Item 1

Figure 2-9. Packet Layout for Imager Servo Error, Imager IMC Data, Sounder Servo Error, and AVS Data Type 1-3 Packet Types

Table 2-6 identifies the MDL packet IDs and their respective contents for each of the MDL packet types, and the order in which the MDL analog data is sampled and inserted into MDL stream.

Table 2-6. MDL Data Packet Format

Header (binary)	Parity	Data	Collection Rate (kbps)
0000	1	Unused	0
0001	0	Sync Word (0xFAF320)	~2.6 (1 word/frame)
0010	0	S/C Telemetry (PCM1)	4 (async)
0011	1	S/C Telemetry (PCM2)	4 (async)
0100	0	Imager Servo Error N/S, E/W (ise)	19.2
0101	1	Imager IMC Data N/S, E/W (imc)	19.2
0110	1	Sounder Servo Error N/S, E/W (sse)	9.6
0111	0	SXI AVS Data X/Y Axis (avs1)	19.2

Header (binary)	Parity	Data	Collection Rate (kbps)
1000	0	SXI AVS Data Z Axis, Imager AVS Data X Axis (avs2)	19.2
1001	1	Imager AVS Data Y/Z Axis (avs3)	19.2
1010	1	SXI Image Data	100 (async)
1011	0	Fill Data	~5.2 (as needed)
1100	1	Analog Spare A, B	9.6
1101	0	Generic 2 Image Data	0-50 (async)
1110	0	Generic 1 Image Data	0-100 (async)
1111	1	Unused	0

Notes:

Bits 0 and 12 are LSBs for AVS and servo error data.

Table 2-7 shows the transmission rates for the different data types in the MDL stream and Table 2-9 shows the analog digitization order.

Table 2-7. MDL Analog Data Transmission Rates

Parameter	Sample Rate
Imager servo error	800 Hz, each N/S and E/W
Imager IMC analog data	800 Hz, each N/S and E/W
Sounder servo error	400 Hz, each N/S and E/W
SXI AVS data	800 Hz each axis
Optical bench AVS data	800 Hz each axis

Table 2-8. MDL Analog Digitization Order

Order	Data	Order	Data
1	SXI ADS Data X Axis	13	SXI ADS Data X Axis
2	SXI ADS Data Y Axis	14	SXI ADS Data Y Axis
3	SXI ADS Data Z Axis	15	SXI ADS Data Z Axis
4	Imager/Sounder ADS Data X Axis	16	Imager/Sounder ADS Data X Axis
5	Imager/Sounder ADS Data Y Axis	17	Imager/Sounder ADS Data Y Axis
6	Imager/Sounder ADS Data Z Axis	18	Imager/Sounder ADS Data Z Axis
7	Imager IMC North/South	19	Imager IMC North/South
8	Imager IMC East/West	20	Imager IMC East/West
9	Imager Servo Error North/South	21	Imager Servo Error North/South
10	Imager Servo Error East/West	22	Imager Servo Error East/West
11	Sounder Servo Error North/South	23	Analog Spare A
12	Sounder Servo Error East/West	24	Analog Spare B

The SXI data embedded in the MDL stream consists of CCSDS transfer frames. CCSDS packet Application IDs (APIDs) are assigned by the instrument to different processing functions within the instrument. The beginning of a packet is aligned with the beginning of each transfer frame data field. Packets cannot span transfer frames – unused space in the transfer frame data field following

inserted packets contains a repeating frame fill data pattern (0xA894). Packet types are inserted into the SXI stream asynchronously, driven by instrument operational mode and status.

The *GOES Solar X-Ray Imager (SXI) Telemetry and Command Handbook* defines the detailed format for SXI data. Table 2-9 provides a summary of the SXI transfer frame and packet structures.

Table 2-9. SXI Transfer Frame Description

Transfer Frames	# of Bits	# of Bytes
SXI Transfer Frame	6816	852
Sync Mark (value = 1ACFFC1D HEX)	32	4
Transfer Frame Data	6784	848
Transfer Frame Primary Header	48	6
Data Field	6720	840
CRC Error Control Field	16	2
SXI Source Packet	ApID dependent	ApID dependent
Source Packet Primary Header	48	6
Source Packet Secondary Header	48	6
Packet Data	ApID dependent	ApID dependent

Table 2-10 provides a summary of the SXI packet types. As indicated, some SXI packets are sent to GTACS for further processing. For GOES-N, O and P there are no IOs. If IOs are added to future GOES missions, their packet IDs must be unique from those used by SXI. APID values can range from 0 to 255. The MRS&S and GTACS have reserved the values from 251 – 255 for internal SSGS use.

Table 2-10. SXI Packet Description

APID	Total Packet Length (bytes)	Description	Approximate Frequency (Packets/Minute)	Passed to GTACS
0x10	612	Housekeeping	15	Yes
0x11	840	Image header/data – Primary	491	No
0x12	840	Image header/data – Secondary	246	No
0x13	840	Image summary	1	Yes
0x14	840	Data & health monitor	1	Yes
0x15	840	Sequence data	1	Yes
0x16	840	Image header/data – Flare	Irregular	No
0x18	840	HASS data	1 to 10 (22/minute max)	No
0x20	24	Observing Events	10-30 per day	Yes
0x21	24	Computer Events	Irregular	Yes
0x31	196	Memory Dump (Manually Commanded)	Irregular	Yes
0x7fe	Variable length	Software fill packet	Irregular	No
0x94	One Transfer frame, no CCSDS header	Hardware fill packet	Irregular	No

2.5.5 OATS External Interfaces

OATS receives and transfers data files from and to systems outside SSGS on an as-needed but infrequent basis. Files are transferred using File Transfer Protocol (FTP) within the NOAA network or USB or CD-ROM. Interface functions for O&A data, OATS External Interface Port (OPORT), and database disk are described in the OATS design-level documentation. The American Standard Code for Information Interchange (ASCII) files transferred are as follows:

a. OATS O&A Set – orbit and attitude information associated with Message Type 33.

b. Naval Observatory Time Coefficients (OPORT) – prediction coefficients and time conversion tables.

c. Star Catalog Updates from NASA (OPORT) – FK5 Star Catalog and NASA SKYMAP input for INR.

d. Spacecraft Databases - general and specific spacecraft operational data definitions.

The contents of these files are described in Section 5.0.

2.5.6 Spacecraft Emulator Interfaces

The BSE is used in place of the satellite for purposes of operational procedure design and validation, as well as for mission and on-station rehearsals. The BSE simulates one spacecraft at a time.

The BSE combines environmental, orbital, and spacecraft subsystems models with non-linear simulations of the spacecraft dynamics and integrates them with hardware based, functional facsimiles of the spacecraft electronics to produce a high fidelity spacecraft simulator. Table 2-11 provides a list of the BSE data simulation interfaces.

Table 2-11. BSE Data Simulation Interfaces

Data	Rate	Interface
PCM 1 and PCM 2	4 kbps or 1 kbps	clock and data (TTL)
Command	2 kbps	clock and data (TTL)
MDL	400 kbps	clock and data (TTL)
PCM 1 and PCM 2	4 kbps or 1 kbps	TCP/IP
Command	2 kbps	TCP/IP

The pertinent SSGS subsystems that interface with the S/C Emulator are shown in Figure 2-10. Details of the interface can be found in the *GOES N-P Boeing Spacecraft Emulator to SSGS ICD*.

2.5.6.1 BSE/NTACTS Interface

The electrical interface with the BSE consists of the following:

a. Command Serializer Output (clock and data TTL, BNC)
b. Frame Synchronization Input for 1694 Telemetry (clock and data TTL, BNC)
c. Frame Synchronization Input for 2209 Telemetry (clock and data TTL, BNC).

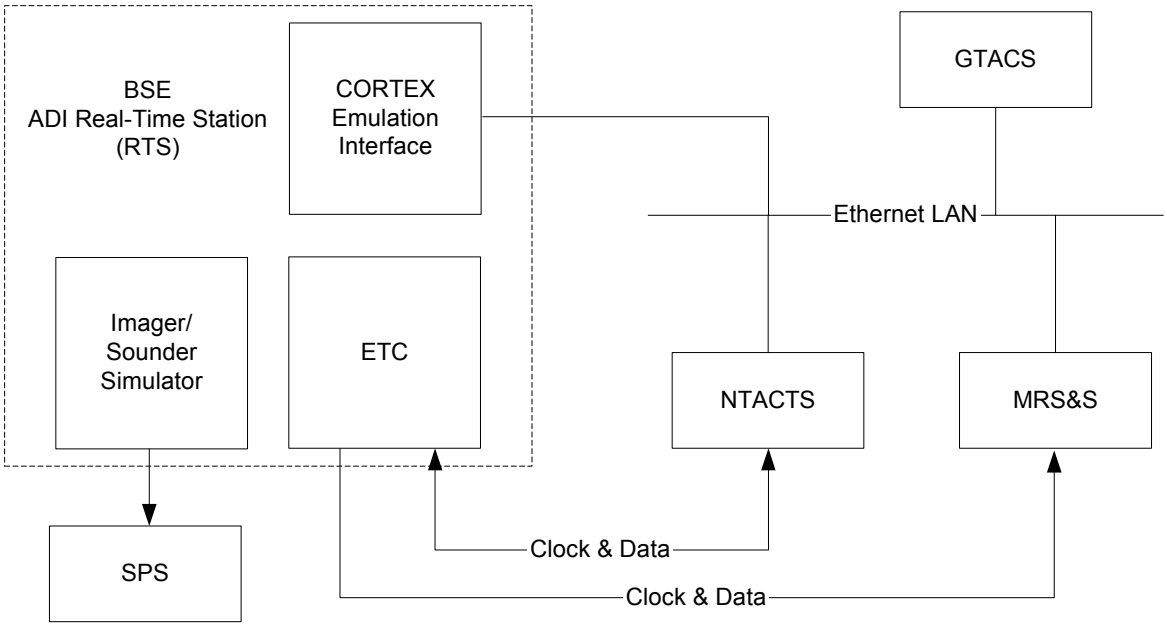

Figure 2-10. BSE-to-SSGS Interface Diagram

2.5.6.2 BSE/GTACS Interface

The BSE connects to GTACS via a TCP/IP BSE-emulated CORTEX^{NT} interface. These messages are described fully in the *Command, Ranging & Telemetry Unit (CORTEX^{NT}) Generic Ethernet Interface* document.

2.5.6.3 BSE/MRS&S Interface

The emulator provides MDL data to the MRS&S as a 400 kHz clock and data signal. Each MRS&S rack provides one or more female DB9 connector at the lower rear for accepting this signal, which is then routed to an MRS&S via the front MRS&S data patch panel. The pin out for this connection is shown in Figure 2-11.

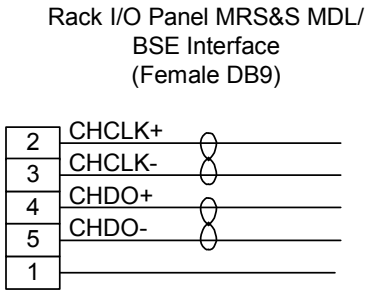

Figure 2-11. BSE-to-SSGS Interface Pin Out Diagram

2.5.6.4 BSE/SPS Interface

The Aydin 322 Bit Sync and 322 Demodulator have been replaced by one unit, the SRI SD-4220 Demodulator/Decoder System. The SDI was the heritage SPS. The Modernized Sensor Processing System (MSPS) uses the GGB (GOES Gear Box).

2.5.7 Telemetry and Commanding Project Database

This database provides the telemetry and command definitions used by GTACS. For telemetry, it provides the information necessary to collect, decommutate, identify, and process all telemetry received by GTACS. For commanding, it provides the command mnemonics, structures, sequencing, and associated validation criteria.

2.5.8 RPM and SPS Interface

The RPM and SPS exchange data with GTACS via Ethernet using TCP/IP. GTACS provides the communication interface between RPM, SPS, and other SSGS elements, all via TCP/IP. GTACS sends received messages to the appropriate destinations based on message IDs as defined in Section 4.0.

2.6 AC Power Connectors

Hardware provided for the GOES N-P SSGS NTACTS, GTACS, OATS, and MRS&S elements requires no special electrical power connectors. Complete power requirements for SSGS hardware are provided in the *GOES N-P SSGS System Installation Plan*.

The OGE components use a NEMA 5-15P plug (and a 5-15R receptacle). The following electrical power connectors are required to connect the SPS and PM system racks to the power distribution system:

a. CDAs:

   SPS cabinets:

   4 conductor (2 poles, neutral, ground)
   Plug: NEMA L5-30P

Receptacle: NEMA L5-30R
30 amperes, single phase

PM cabinets:
4 conductor (2 poles, neutral, ground)
Plug: NEMA L5-30P
Receptacle: NEMA L5-30R
30 amperes, single phase

b. SOCC:
All cabinets:
3 conductor (1 pole, neutral, ground)
Plug: NEMA L5-30P
Receptacle: NEMA L5-30R
30 amperes, 1-phase

c. WCDAS:
Raw Downlink Rack:
Circuit #1:
3 conductor (1 pole, neutral, ground)
Plug: NEMA L5-30P
Receptacle: NEMA L5-30R
30 amperes, 1-phase

Circuit #2:
3 conductor (1 pole, neutral, ground)
Plug: NEMA L5-30P
Receptacle: NEMA L5-30R
30 amperes, 1-phase

Circuit #3:
3 conductor (1 pole, neutral, ground)
Plug: NEMA 5-15P
Receptacle: NEMA 5-15R
15 amperes, 1-phase

GVAR Rack:
3 conductor (1 pole, neutral, ground)
Plug: NEMA L5-30P
Receptacle: NEMA L5-30R
30 amperes, 1-phase

2.7 CDA Range Calibration Transponder

The CDA Range Calibration Transponder is installed atop a tower at the CDA station. The transponder receives and retransmits a signal from the RF system that is used by the SPS to calculate the ground system range delay. Transponder requirements are listed in Table 2-12, and the unit and its mounting brackets diagram is shown in Figure 2-12.

Table 2-12. CDA Range Calibration Transponder Requirements

Parameter	Requirement
Input Center Frequency	2028 MHz
Output Center Frequency	1686 MHz
Bandwidth: 3 dB 1 dB	125 MHz 110 MHz
Input Power: Nominal* Maximum*	61 μW/meter^2 (-10 dBm) 61 mW/meter^2 (+20 dBm)
Conversion: Power Loss Time Delay	42 dB Nominal 25 ns Nominal
Local Oscillator: Frequency Frequency Tolerance versus Temperature Accuracy Short Term Stability	 342 MHz 0.003% of frequency over the temperature range ±10 ppm ±1 x 10^{-7}/250 msec
Operating Temperature	-30 to +140 °F
AC Power	105 to 125 VAC at 60 Hz, 5.0 W Nominal

Notes:
* Expected ground station transmitted power: 250 mW from a 60-foot GOES antenna at a distance of 300 m.

KEY TO ACRONYMS AND ABBREVIATIONS			
AC	Alternating Current	ppm	Parts Per Million
dB	decibel	VAC	Volts Alternating Current
Hz	Hertz	W	Watts
ns	nanoseconds		

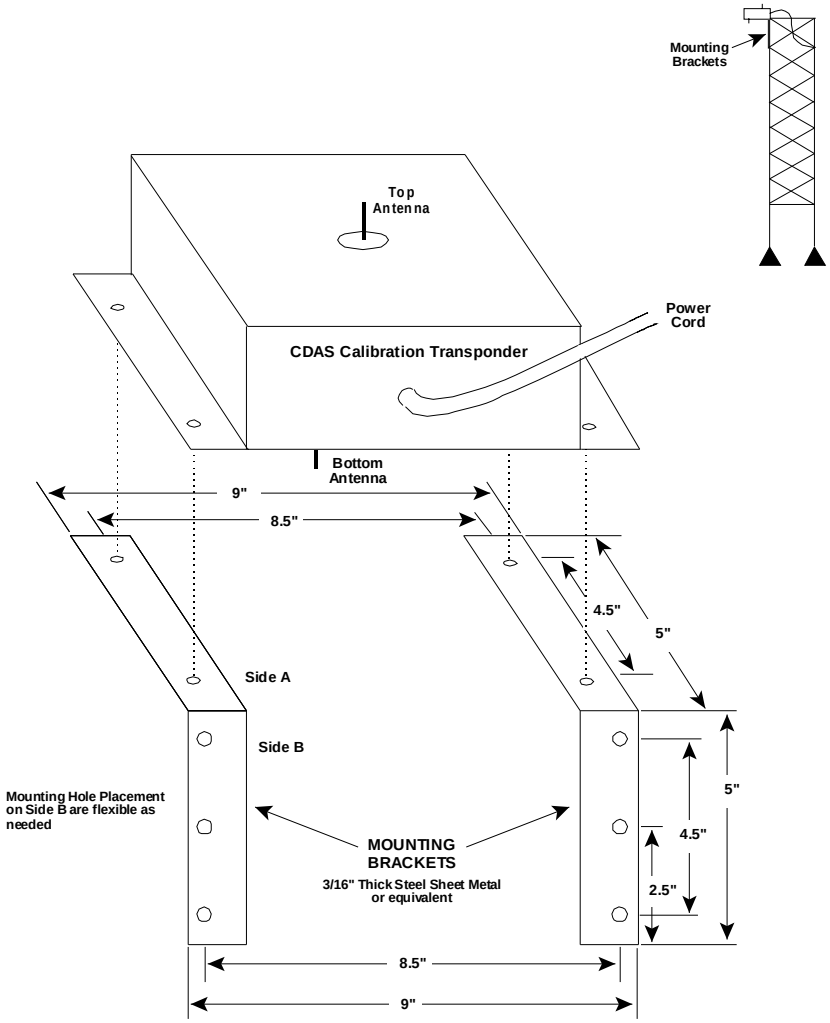

Figure 2-12. Range Calibration Transponder and Mounting Brackets

2.8 OATS External Port

The OATS external port permits OATS to receive or transfer data to and from systems outside the OGE or other OGE systems through a GFE Windows based platform. Each OATS workstation provides a 9600-bps asynchronous port for serial connections, or a network interface to the Windows platform. Section 5.0 describes the following types of transferable data:

a. OATS files in ASCII format for input into PC applications, such as plotting software. These files are produced by the OPORT function.

b. Naval Observatory Time Coefficients obtained over the Internet from the U.S. Naval Observatory. These coefficients are then transferred to OATS for updating its time coefficients by way of the OATS OPORT Ingest United States Naval Observatory (USNO) Time Data function.

c. Star Catalog updates received from NASA. These updates are transferred to OATS for updating the Star Catalog using the OATS OPORT Ingest Star Catalog function.

d. Satellite independent and dependent databases, received for transfer to OATS and initialization of the OATS satellite independent and dependent databases.

The physical interface can be described as a Data Terminal Equipment (DTE) to DTE RS-232 asynchronous connection using the 25-pin connector type illustrated in Figure 2-1. Table 2-13 describes the interconnection between an OATS and a PC.

Table 2-13. OATS to PC Interconnection

OATS End		PC End	
Pin Numbers	**From**	**Pin Numbers**	**To**
2	Transmit Data	3	Receive Data
3	Receive Data	2	Transmit Data
4	Request to Send	6	Data Set Ready
5	Clear to Send	20	Data Terminal Ready
6	Data Set Ready	4	Request to Send
7	Signal Ground	7	Signal Ground
8	Data Carrier Detect	4	Request to Send
20	Data Terminal Ready	5	Clear to Send

2.9 Digital Wideband Tape Recorder (DWTR) Interface

The GFE Digital Wideband Tape Recorder (DWTR) is used to record raw Imager and Sounder data or MDL data for input to the SPS or MDL, respectively, for test purposes. The data is Non-Return to Zero Level (NRZ-L) formatted with output signal levels conforming to EIA-422-A.

The data is input to the SPS in place of the raw SDL via the SDL Downlink Patch Panel. The MDL data is input to the MDL interface rack SJI J3 at the SOCC. All connections are made with DBMA-9S Cannon connectors, or equivalent, with the following pin assignments:

Pin Number	Signal
1	Shield
2	Ground
3	Send Clock A
4	Send Data A
5	Ground
6	Send Data B
7	Ground
8	Ground
9	Send Clock B

Section 3.0 GVAR Transmission Format

3.1 Introduction

This section defines the structure and content of the GOES Variable Format (GVAR) data transmission format used to broadcast meteorological data measured by the independent GOES I-P Imager and Sounder instruments. There are multiple versions of the format, for GOES I-L, GOES M-N, and GOES O-P, as are summarized in Section 3.1.1. The difference in the versions (except V2 to V3) includes additions to the later versions, with previously spare fields now being used, and the data reorganization for GOES O-P due to the addition of the 8th IR detector. Included in the format are Imager and Sounder telemetry and calibration data. In addition, the format provides a capability to insert text messages and spacecraft navigation support data into the GVAR stream.

The GVAR format has its origins in the Operational VISSR Atmospheric Sounder (VAS) Mode AAA (Triple A) format used with the previous generation, spin-stabilized GOES spacecraft. The AAA format consisted of a repeating sequence of twelve fixed-length equal size blocks, transmitted in a synchronous fashion at the spin rate of the satellite (i.e., one complete 12-block sequence per spacecraft rotation). In contrast, starting with the GOES I-M series, the GOES satellites are three-axis stabilized, giving the Imager and Sounder a continuous view of the Earth. The GVAR format was developed to permit full use of the capabilities afforded by the new instruments and the continuous Earth view, while maintaining as much commonality with AAA reception equipment as possible.

The following attributes have been used in the Name column of tables residing in Section 3.0:

a. An "*" (asterisk) is used as a wildcard to indicate more information follows the mnemonic. Refer to the Description column for a summary. For example: IGAIN2* in the Name column refers to IGAIN2_P1 through IGAIN2_P7 as indicated in the Description column.

b. A "**" or more asterisks are used to draw the reader's attention directly to a comment in the Description column.

Symbols are also used in Notes that follow tables. These symbols, however, only direct the reader back to a symbol used in the Description column.

3.1.1 Summary of Changes Across Versions of GVAR

The "Version Number" field which resides in Word 8 of the GVAR block header has values 0 through 3 assigned as follows:

Version Number	Spacecraft Supported	Change in Relation to Previous Version
0	GOES I - L	Original GVAR specification for GOES I-M

Version Number	Spacecraft Supported	Change in Relation to Previous Version
1	GOES I - L	• Midnight Blackbody Calibration Correction (MBCC) information added. • Added Current Imager and Sounder Frame Start times to support User Priority Interrupt Processing. • Added SPS ID to GVAR Header. • Added 4 words to blackbody statistics for BB Dwell Changes.
2	GOES M-N	• Imager IR Channel order in Block 1 & 2 changed. • New Block 11 added for imager factory coefficients.
3	GOES O-P	Support for 8th detector in GOES O-P: Block 11 added for imager factory coefficients including coefficients for the 8th detector. Modified blocks for eighth detector: Imager Block 0 • Imager factory coefficients removed. • Added data for 8th detector to existing block (using spares removing the Imager factory coefficients). • Moved the detector offsets and the Imager nadir positions to the end of the block. Imager Block 2 • Added data for 8th detector to existing block (using spares at the end of the block). Imager Blackbody Block 11 • Added a 3rd block (necessary for 8th detector). Imager Calibration & Limits Block 11 • Added data for 8th detector to existing block (using spares at the end of the block). Imager ECAL Block 11 • Added a 3rd block (necessary for 8th detector). Imager Spacelook Block 11 • Added a 7th block (necessary for 8th detector).

Note that Versions beyond #1 are not retroactive (i.e., V0 does not exist anymore) to GOES I-L. "Version #2" describes the mode of GVAR applicable to GOES M-N data (and includes everything in Version #1). "Version #3" describes the form of GVAR sent for GOES O-P only and includes everything in prior versions as well.

3.2 Scan Format

The GVAR transmission sequence, depicted in Figure 3-1, and Table 3-1, provides an overview of the GVAR block structure. The format consists of twelve distinct blocks numbered 0 – 11. Blocks 0 – 10 are transmitted after the completion of each Imager scan line. Block 10 is then followed by a variable number of Block 11s according to what Sounder scan data, instrument telemetry, and other data are available for transmission.

Block 0 and all varieties of Block 11s are fixed, equal-length structures. Blocks 1 – 10 vary in length in accordance with the length of the Imager scan line (i.e., the width of the commanded frame). The minimum block size for Blocks 1 – 10 is 32,208-bits, for scan widths less than 1.9°, while the largest block size is 262,288-bits for a 23°-wide scan. The maximum values indicated in the figure for Blocks 1 – 10 correspond to the manufacturer's specified maximum scan width of 19.2°. Scans having widths up to 23° are possible with either instrument; however, the radiometric and pointing accuracy degrades for widths above 19.2°. The GVAR format handles scans wider than 19.2° with restrictions on operations to allow for special post launch tests. During normal operations, the 19.2° limits specified by the manufacturer represent the upper bound.

DOC	IR1	IR2	VIS 1	VIS 2	VIS 3	VIS 4	VIS 5	VIS 6	VIS 7	VIS 8	SAD
0	1	2	3	4	5	6	7	8	9	10	11

– Each GVAR Block has the following:
10,032-bit Synchronization Code
720-bit Header
N-bit Information Field
16-bit CRC

– Blocks 0 and 11 have a fixed-length information field of 64,320 bits.
– Blocks 1 – 10 have variable length information fields directly dependent on frame width (scan width), with a minimum length of 21,440 bits.
– A Single Imager Scan generates Blocks 0–10 in sequence.
– Blocks 0–10 may be followed by any number of Block 11s (0–N), depending on what is available
In priority order, the following Blocks transmitted are:

1. Imager Scan Blocks 0 –10
2. Imager Compensation and Servo Errors – 1 Block 11
3. Sounder Compensation and Servo Errors – 1 Block 11
4. Imager Telemetry Statistics – 1 Block 11
5. Imager Spacelook Statistics and Data – 6 Block 11s
6. Imager Calibration Coefficients and Limits – 1 Block 11
7. Imager ECAL Statistics and Data – 2 Block 11s
8. Imager BB Statistics and Data – 2 Block 11s
9. Imager Visible NLUTs – 2 Block 11s
10. Imager Star Sense Statistics and Data – 9 Block 11s
11. Sounder Documentation Scan Data – 2-523 Block 11s
12. Sounder Telemetry Statistics – 1 Block 11
13. Sounder Spacelook Statistics and Data – 5 Block 11s
14. Sounder Calibration Coefficients and Limits – 2 Block 11s
15. Sounder ECAL Statistics and Data – 3 Block 11s
16. Sounder BB Statistics and Data – 5 Block 11s
17. Sounder Visible NLUTs – 9 Block 11s
18. Sounder Star Sense Statistics and Data – 9 Block 11s
19. GIMTACS Text Messages – 1–2 Block 11s
20. SPS Text Messages – 1 Block 11
21. Imager Factory Coefficients – 1 Block 11
22. Fill Data – 1 Block 11

KEY TO ACRONYMS AND ABBREVIATIONS			
CRC	Cyclic Redundancy Check	IR n	Infrared Detector n
DOC	Documentation	VIS n	Visible Detector n
ECAL	Electronic Calibration		

Figure 3-1. GVAR Format

Table 3-1. GVAR Format

Parameter	Value
Scan	
Period Blocks and Imager Scan Bit Rate	Variable 11 2,111,360 bps
Block	
Period Synch Length Header Word Length Header Length (Triple Redundant)	15.25 to 104.6 msec 10,032-bits 8-bits per word 90 words (720-bits)
Data Section (by block type)	
Block 0 - Documentation Block Word Size Field Length	 8-bits 8040 words (64,320 bits)
Block 1 - Infrared Block 1 Word Size Field Length Number of Records Line Documentation IR Detector Data	 10-bits *68 to 21,008 words 4 per block 16 words 1 to 5236 words
Block 2 - Infrared Block 2 Word Size Field Length Number of Records Line Documentation IR Detector Data	 10-bits *51 to 15,756 words 3 per block 16 words 1 to 5236 words
Blocks 3 – 10 - Visible Blocks Word Size Field Length Number of Records Line Documentation IR Detector Data	 10-bits *20 to 20,960 words 1 per block 16 words 4 to 20,944 words
Block 11-Sounder Data and Imager Factory Coefficients Word Size Field Length (words) Record Types Number of Records	 6, 8, or 10-bits 10720, 8040, or 6432 7 1 to 8
CRC	16-bits

Notes:

* Variable length information fields are subjected to zero packing, filling, to meet the 32,208-bit minimum block length and to satisfy the 16-bit bounding required for the block CRC. Maximum values denote only the data sections resulting from a 19.2° instrument scan.

3.2.1 Imager

The Imager is designed to sense radiant and solar energy from various areas of the Earth. The layout of the Imager instrument detectors is depicted in Figure 3-2, Figure 3-3, and Figure 3-4. The Imager has a total of 22 (GOES I-N) or 24 detectors (GOES-O and beyond) split into the following three groups:

a. Eight visible detectors, V1 – V8.

b. Seven (or Eight, GOES-O and beyond) primary IR detectors, P1 – P7 (P8, GOES-O and beyond).

c. Seven (or Eight, GOES-O and beyond) redundant IR detectors, R1 – R7 (R8, GOES-O and beyond).

Each of the detectors on a given spacecraft is a member of one of five spectral channels. The channel numbering for all satellites from GOES-I through GOES-P is as follows:

Channel	Nominal Wavelength
1	Visible
2	3.9 μm
3	6.75 or 6.5 μm
4	10.7 μm
5	12.0 μm
6	13.3 μm

Note that no Imager will have both channels 5 and 6. Those on GOES-I through GOES-L have channel 5. Those on GOES-M through P have channel 6.

Although physically distinct, the five channels on a given spacecraft are optically overlaid, as illustrated in Figure 3-5 and Figure 3-6. During imaging operations, the detectors are active in either a side 1 or a side 2 configuration, as illustrated in Figure 3-7. In both configurations the visible detector group (V1 – V8) and one of the two IR groups, either primary or redundant, are active. The resultant swath on the Earth's surface generated by either of these two configurations is misaligned in the IR and visible bands as indicated in Figure 3-8. The SPS removes the misalignment by lagging data from the appropriate visible detectors and combining these data with detector data from a subsequent scan. This forms Earth scan swaths in which the visible and IR detector data coincide. In the side 1 detector configuration, data from visible detectors V5 – V8 are lagged. These lagged data are combined with side 1 IR detector data and visible detector V1 – V4 data gathered during the next scan to create a GVAR Block 0 – 10 sequence. This makes V5 the northernmost detector. For the side 2 detector configuration, data from visible detectors V5 – V8 and IR detectors are lagged. The lagged data are combined with data from visible detectors V1 – V4 gathered during the next scan to create a GVAR Block 0 – 10 sequence, making V5 the northernmost detector.

The placement of Imager detector data within the Block 0 – 10 structure shown in Figure 3-1 is recorded in the Imager Documentation Block 0. For GOES-I through GOES-L, the GVAR does not order the channels according to increasing wavelength, but by the arbitrary system, 4, 5, 2, 3. (This ordering was based on the old pre-GOES-I AAA data stream.) Beginning with GOES-M (GVAR version 2), this is changed. The data in GVAR version 2 and beyond will be in order of increasing channel wavelength. For example, for GOES-M through GOES-P the order will be 2, 3, 4, 6. Block 1 contains IR scan data for channels 4 and 5 (GOES I-L), or channels 2 and 3 (GOES-M and beyond); Block 2 contains IR data for channels 2 and 3 (GOES I-L) or channels 4 and 6 (GOES-M and beyond); and, Blocks 3 – 10 contain visible detector data. The IR detector data position within the blocks 1 and 2 is as follows:

For **GOES I-L**

Block 1:	Channel 4, Detector 1
	Channel 4, Detector 2
	Channel 5, Detector 1
	Channel 5, Detector 2
Block 2:	Channel 2, Detector 1
	Channel 2, Detector 2
	Channel 3, Detector 1

For **GOES M-N**

Block 1:	Channel 2, Detector 1
	Channel 2, Detector 2
	Channel 3, Detector 1
	Channel 3, Detector 2
Block 2:	Channel 4, Detector 1
	Channel 4, Detector 2
	Channel 6, Detector 1

For **GOES-O and beyond**

Block 1:	Channel 2, Detector 1
	Channel 2, Detector 2
	Channel 3, Detector 1
	Channel 3, Detector 2
Block 2:	Channel 4, Detector 1
	Channel 4, Detector 2
	Channel 6, Detector 1
	Channel 6, Detector 2

The visible detector data position within the blocks 3-10 is as follows:

Block 3:	Visible Detector 5
Block 4:	Visible Detector 6

Block 5: Visible Detector 7
Block 6: Visible Detector 8
Block 7: Visible Detector 1
Block 8: Visible Detector 2
Block 9: Visible Detector 3
Block 10: Visible Detector 4

The Imager scans broadcast in GVAR are composed using the IR data to define the output swath. Under some conditions, a full complement of detector data is not available for the Block 0 – 10 sequence. For example, in a side 1 configuration, the first scan of a N-S frame always lacks visible detector data for the northernmost four lines. In this case, a half-sided scan is employed. A full GVAR Block 0 – 10 sequence is constructed of fill data (zeros) substituted for the unavailable detector information. The resulting GVAR blocks generated are sized according to the requirements of the imaging frame width and denoted as containing fill data by way of the Data Valid flag in the corresponding block headers (see Section 3.3.2).

The side 1 start-of-frame, half-sided sequence described above occurs when there is a lack of visible detector data to fully overlay the IR swath. The last scan of the same frame has the opposite condition--four extra lines of visible detector data for which an IR swath is never available. In this case, the excess visible detector data are trimmed.

Half-sided Block 0 – 10 sequences are also generated when data disruptive frame breaks are encountered. These frame breaks arise under the following three conditions:

a. An instrument reset.
b. The loss of raw signal synchronization by the SPS.
c. A priority frame interrupt.

The occurrence of an instrument reset causes the Imager to cancel all current or pending activities. The SPS responds to an instrument reset by dumping any lagged data held as a half-sided scan.

The loss of signal synchronization causes the loss of one or more frame scans. When synchronization is subsequently reestablished, the loss (detected as an excessive step in the N-S scan address) triggers a flushing of the currently held lagged data through a half-sided GVAR Block 0 – 10 sequence. The newly acquired scan generates a second half-sided sequence, similar to the start of a frame.

In a similar fashion, the interruption of a lower priority frame by a higher priority frame generates two, successive half-sided Block 0 – 10 sequences; one to flush the lower priority lagged data, and one to start the higher priority frame. At the conclusion of the higher priority frame, two more half-sided sequences are generated, one flushing the higher priority lagged data, and one marking the restart of the interrupted lower priority frame. Note that half-sided scans are not generated for frame breaks caused by star senses since these do not disrupt the scan data sequence.

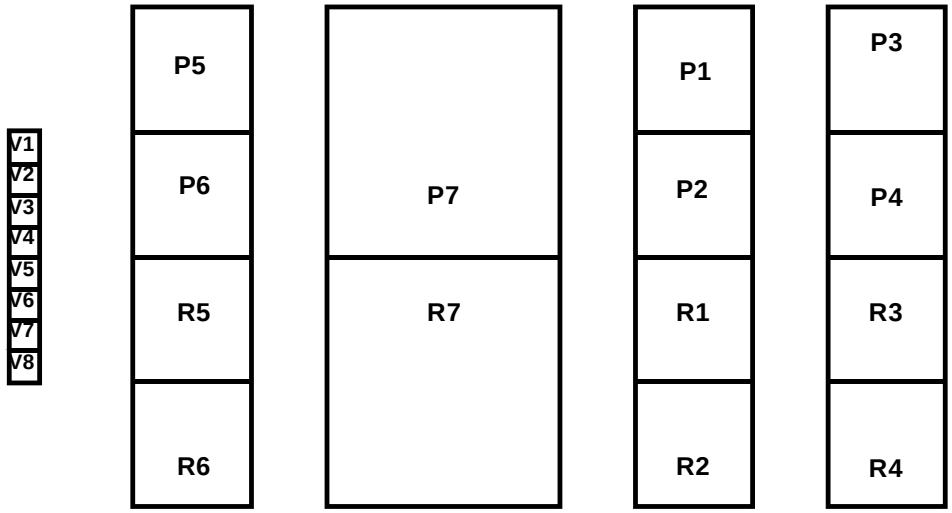

CHANNEL	1	2	3	4	5
CENTRAL WAVELENGTH (µm)	0.65	3.9	6.75	10.7	12
DETECTOR IGFOV (µradians)	28	112	224	112	112

Notes:
µm – micrometers (microns)
µradians – micro radians
IGFOV – Instantaneous Geometric Field-of-View

Figure 3-2. Imager Detector Physical Configuration (GOES I-L)

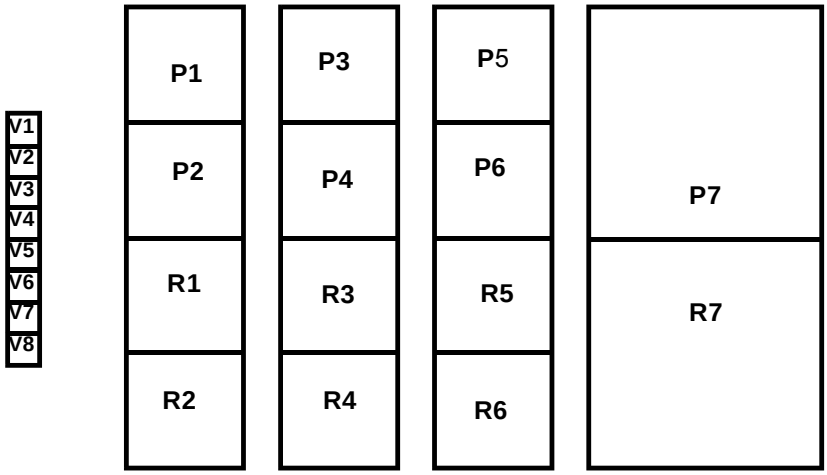

CHANNEL	1	2	3	4	6
CENTRAL WAVELENGTH (µm)	0.65	3.9	6.5	10.7	13.3
DETECTOR IGFOV (µradians)	28	112	112	112	224

Notes:
µm – micrometers (microns)
µradians – micro radians
IGFOV – Instantaneous Geometric Field-of-View

Figure 3-3. Imager Detector Physical Configuration (GOES M-N)

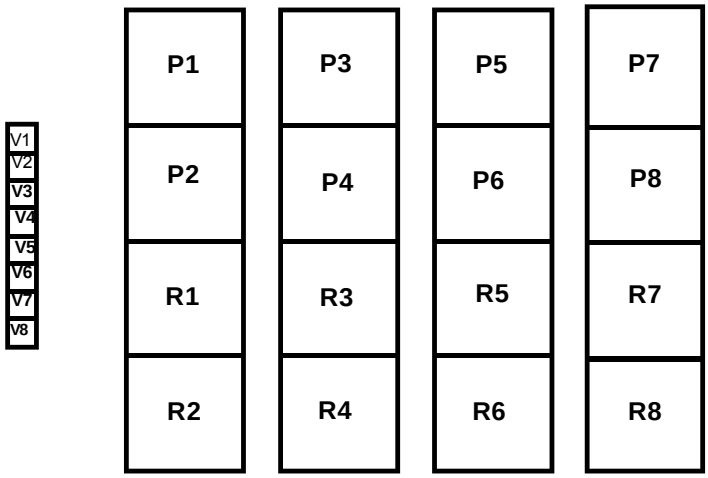

CHANNEL	1	2	3	4	6
CENTRAL WAVELENGTH (µm)	0.65	3.9	6.5	10.7	13.3
DETECTOR IGFOV (µradians)	28	112	112	112	112

Notes:
µm – micrometers (microns)
µradians – micro radians
IGFOV – Instantaneous Geometric Field-of-View

Figure 3-4. Imager Detector Physical Configuration (GOES-O and Beyond)

For GOES I-N, the detector fields of view are changed as shown Figure 3-5.

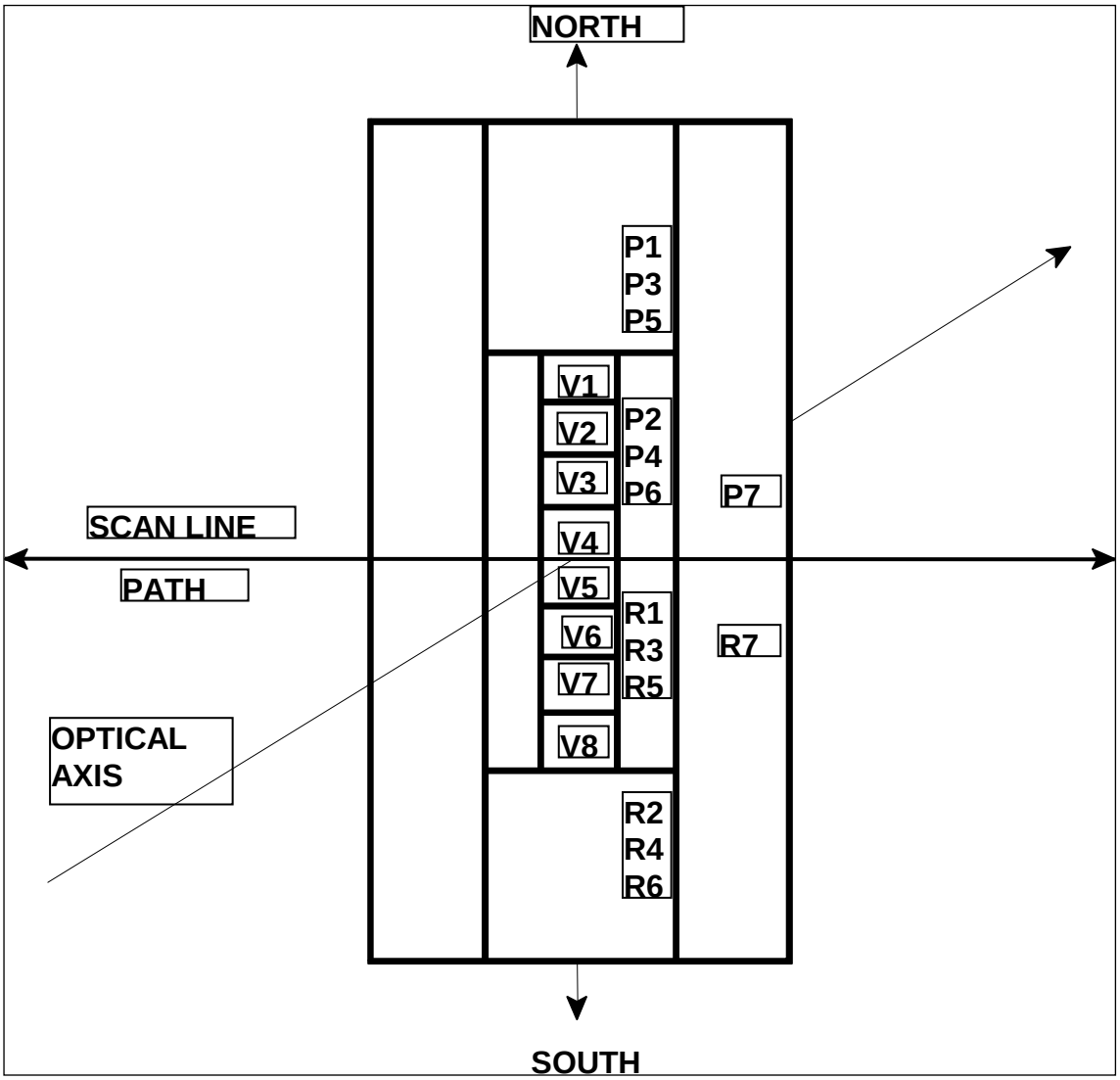

Figure 3-5. Imager Detector Optical Configuration (GOES I-N)

For GOES O-P, the detector fields of view are changed as shown in Figure 3-6.

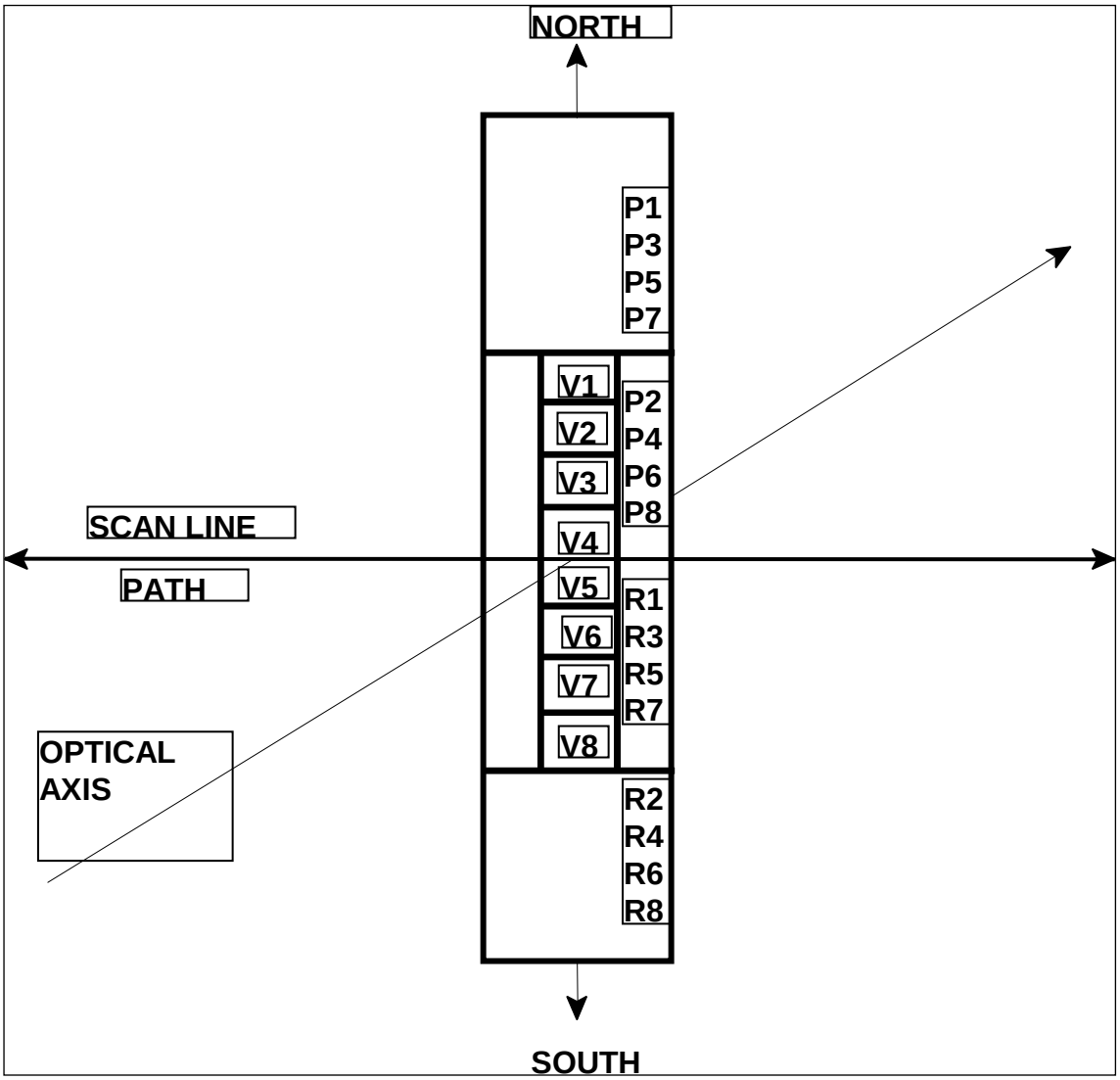

Figure 3-6. Imager Detector Optical Configuration (GOES-O and Beyond)

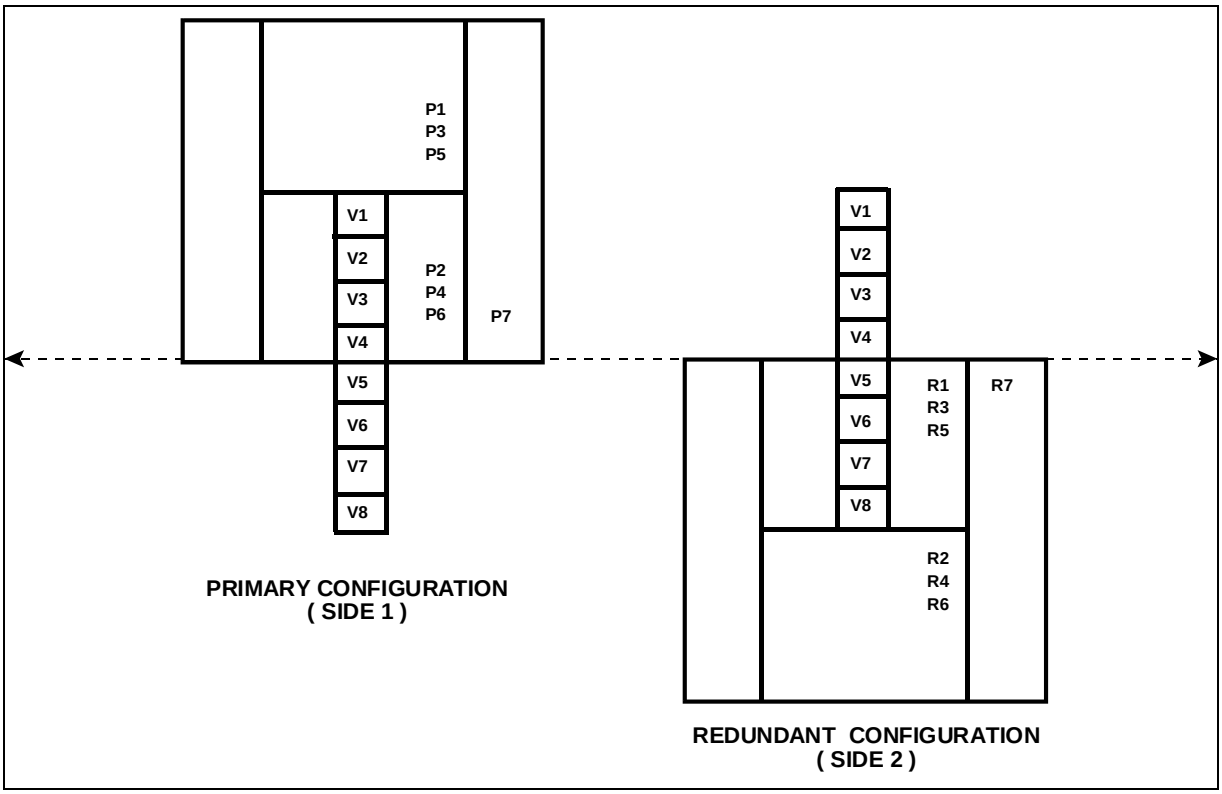

Figure 3-7. Imager Detector Operation Configuration

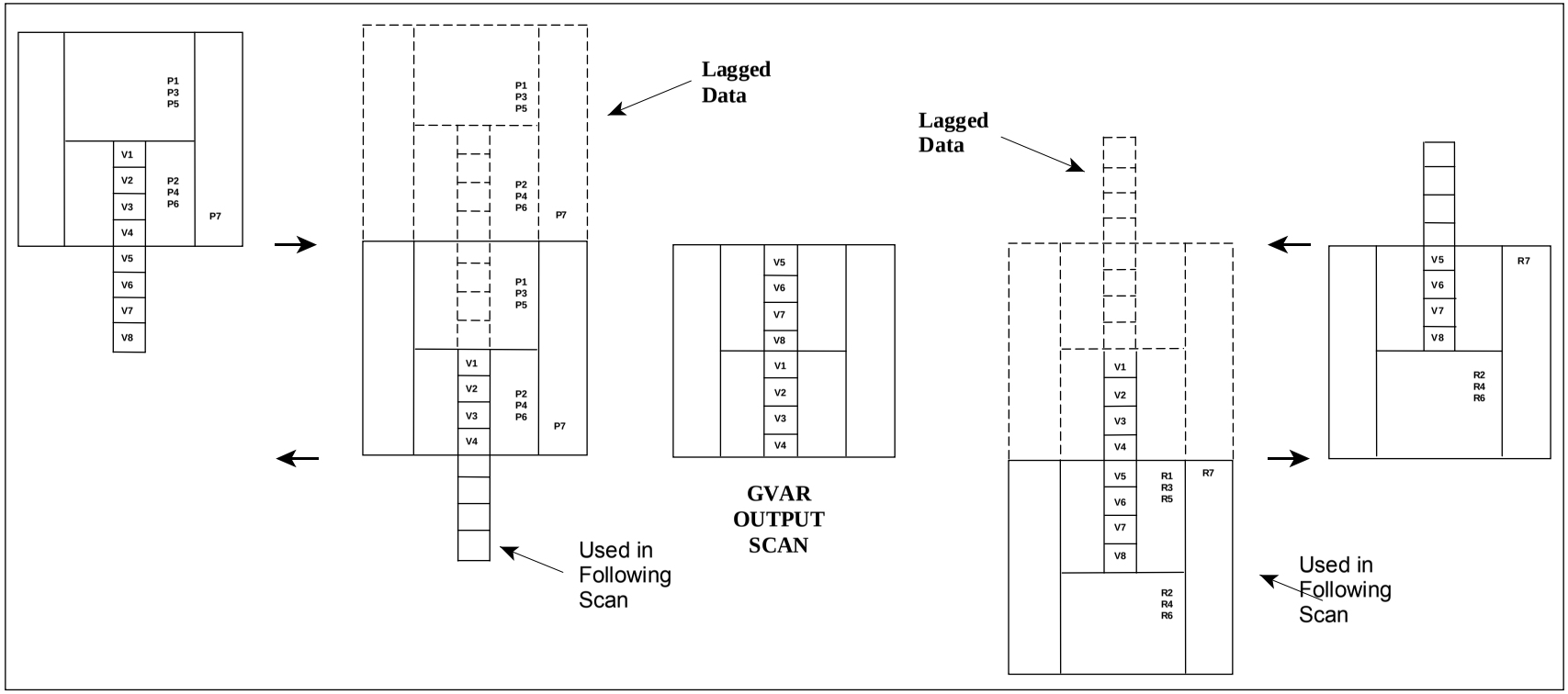

Notes: The relationship between detector configurations, input scans, and output scans is illustrated using two successive input scans. Lagged data from the first scan, solid then dotted, is combined with visible data, solid, from the second scan to construct a complete output scan output in GVAR Blocks 1 – 10.

Figure 3-8. Imager Scan Line Generation

The above discussion of Imager output scan formation assumes the optical configuration of the IR and visible detectors is invariant. This assumption is a simplification. Actually, the IR detector arrays move about the optical axis as the plate upon which they are mounted flexes due to distortions caused by thermal gradients within the instrument Sun shield. These gradients vary over the course of a day and seasonally.

The magnitude of the IR detector array motion has been characterized in terms of visible detector offsets as follows:

a. N-S offset: –8 to +8 lines
b. E-W offset: –64 to +64 pixels

To ensure co-registration of the IR and visible data, the GVAR scan formation process is dynamically adjusted to compensate for the offsets. Compensations for the N-S offsets are made by adjustments to the recombination algorithm, increasing or decreasing the lagging applied to the visible detector data. Compensations for the E-W offsets are performed by clipping visible data lying outside the IR imagery and filling in missing visible data.

3.2.2 Sounder

Unlike the Imager, all of the Sounder's detectors are concurrently active during operations. The Sounder's detectors are split into a radiometric sounding group and a star sense detection group. The physical and optical layout of the 24 Sounder detectors is depicted in Figure 3-9. The four radiometric detector arrays (4 detectors/array) are physically disjoint but optically coincident and aligned. Three of these arrays work in conjunction with a rotating filter wheel assembly to provide radiometric coverage over 18 distinct IR spectral bands, and the fourth detector array is a visible array. The 19 channels, spectral bands, covered by the Sounder's four radiometric arrays are shown in Table 3-2. The star sense detection array contains eight detectors, physically similar to the Imager's visible detector array.

Sounder detector data is transmitted in GVAR within a Block 11 format sequence following the end of a Sounder scan line, as tabulated in Figure 3-1. Unlike the Imager, no scan-to-scan data lagging is required for the Sounder. Specific details concerning the internals of the Sounder Scan Data Block 11 format and the associated Sounder scan patterns are provided in Section 3.3.7.3.

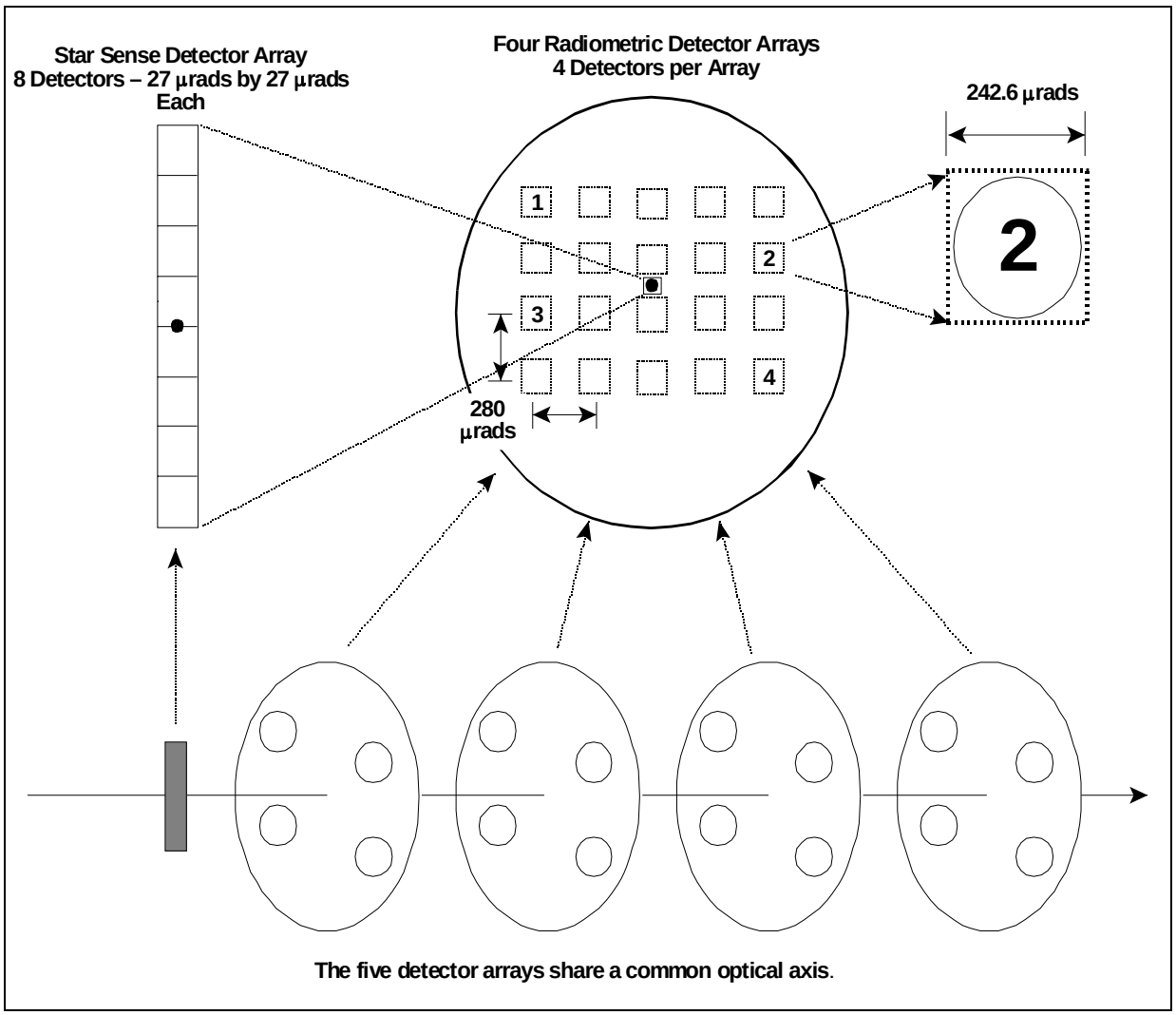

Figure 3-9. Sounder Physical and Optical Detector Configuration

Table 3-2. Sounder Radiometric Channels

Detector	Channel Number	Central Wavelength (microns)	IG Field of View (IGFOV) (μrad)	Purpose
Longwave	1	14.71	224	Temperature Sounding
	2	14.37		Temperature Sounding
	3	14.06		Temperature Sounding
	4	13.64		Temperature Sounding
	5	13.37		Temperature Sounding
	6	12.66		Temperature Sounding
	7	12.02		Surface Temperature
Midwave	8	11.03	224	Surface Temperature
	9	9.71		Total Ozone
	10	7.43		Water Vapor
	11	7.02		Sounding
	12	6.51		Sounding
Shortwave	13	4.57	224	Temperature Sounding
	14	4.52		Temperature Sounding
	15	4.45		Temperature Sounding
	16	4.13		Temperature Sounding
	17	3.98		Surface Temperature
	18	3.74		Surface Temperature
Visible	19	.67	224	Cloud

3.2.3 Yaw-Flipped Spacecraft GVAR Generation

While the capability of operating the GOES I-M spacecraft in a yaw-flip position (a 180° rotation about the yaw axis) was never envisioned, it was necessitated by a solar array drive failure on the GOES-K spacecraft. This failure precluded operations in the forward drive direction. To permit proper tracking of the Sun while the solar array is moving in the reverse direction, the spacecraft has to be in the yaw-flip position. A number of ground system changes were required to support yaw-flipped operations. By design the GOES N-P spacecraft will have the capability to rotate seasonally 180° about the yaw axis (yaw-flip) to attain lower IR detector patch temperatures and, thereby, improve IR channel radiometric performance.

Other than minor changes to algorithms detailed in the *Earth Location User's Guide (ELUG)*, yaw-flipped spacecraft imagery broadcast in GVAR remains in its nominal Earth orientation; that is, images start at the northernmost point on the Earth and scan in a southerly direction. To accomplish this, both the Imager and the Sounder scan from the bottom to the top of their Field of View (FOV). The SPS then reverses the order of the physical detectors in the instruments to maintain the N-S ordering and also reverses the E-W orientation to correct for that yaw-flip induced reversal.

3.2.3.1 Yaw-Flipped Imager

In the reversed (instrument bottom to top) scanning direction, the Imager's visible and IR detectors essentially swap physical positions relative to those in the normal, upright mode, so the Earth-oriented, northernmost imagery is processed first. Visible detector 8 is swapped with detector 1 and 7 with 2. This pattern continues for the remaining visible detectors. Likewise, IR detector 2 is swapped with detector 1 in channels 2, 4, and 5. The contents of the GVAR Block 1 – 2 sequences are as follows:

GOES I-L

Block 1:	Channel 4, IR Detector 2
	Channel 4, IR Detector 1
	Channel 5, IR Detector 2
	Channel 5, IR Detector 1
Block 2:	Channel 2, IR Detector 2
	Channel 2, IR Detector 1
	Channel 3, IR Detector 1

GOES M-N

Block 1:	Channel 2, IR Detector 2
	Channel 2, IR Detector 1
	Channel 3, IR Detector 2
	Channel 3, IR Detector 1
Block 2:	Channel 4, IR Detector 2
	Channel 4, IR Detector 1
	Channel 6, IR Detector 1

GOES-O and Beyond

Block 1:	Channel 2, IR Detector 2
	Channel 2, IR Detector 1
	Channel 3, IR Detector 2
	Channel 3, IR Detector 1
Block 2:	Channel 4, IR Detector 2
	Channel 4, IR Detector 1
	Channel 6, IR Detector 2
	Channel 6, IR Detector 1

The contents of the GVAR Block 3-10 sequence are as follows:

Block 3:	Visible Detector 4
Block 4:	Visible Detector 3
Block 5:	Visible Detector 2
Block 6:	Visible Detector 1
Block 7:	Visible Detector 8
Block 8:	Visible Detector 7
Block 9:	Visible Detector 6
Block 10:	Visible Detector 5

3.2.3.2 Yaw-Flipped Sounder

Detector swapping also takes place for the Sounder to process data from N-S. As shown in Figure 3-9, IR channels 1 – 18 and visible channel 19 have identical 4-detector layouts. Physical detector 4 is swapped with detector 1 and detector 3 with detector 2. The eight star sense detector array has the same layout as the Imager visible array, with detectors 1 – 4 on the top, North side of the optical axis and detectors 5 – 8 on the bottom side. These detectors are swapped in the same manner as the Imager visible detectors, detector 1 with 8 and 4 with 5. The star sense detector data is formatted in the same detector order as the Imager: 4, 3, 2, 1, 8, 7, 6, and 5.

3.2.4 Block Sequencing

The block sequence transmitted within the GVAR stream is actively varied by the priority and availability of each block type. The priority established for a given block type is based primarily on the associated input raw data rates and, to a lesser extent, is assigned to maintain sequential consistency with respect to the instrument functions. Since the Imager has a much higher input raw data rate, the Imager output is assigned a higher priority than the Sounder output. The Block 0 – 10 transmission is followed by a variable number of Block 11s, with Block 11s transmitted in the priority order indicated previously in Figure 3-1.

The Block 11 priority order is followed on a block-by-block output basis. For example, consider a case in which a Sounder Star Sense Statistics and Data Block 11 string comprising nine blocks is the only GVAR data ready for output. Transmission of the first of the nine Block 11s is initiated. While this block is transmitting, an Imager scan string (Blocks 0 – 10) becomes available. The next block transmitted is Block 0 followed by Blocks 1 – 10, in sequence. While the transmission of Block 10 is underway, the available list is again perused, and if no other higher priority blocks are available, the second of the 9-block Sounder star sense string is queued for output following the Block 10.

The established priorities do not, in themselves, explain the GVAR block sequencing that occurs for an active GOES satellite. Comprehending the GVAR block sequence requires an understanding of the general operation of each instrument.

As indicated previously, the Imager and Sounder operate independently of one another and can be commanded to scan variable size frames. While this would seemingly imply fairly random GVAR block sequencing, some aspects of the instruments' behavior follow a predictable pattern that determines the GVAR block sequence. The Imager performs spacelook calibrations at variable rates ranging from once per second to once every 36.6 seconds, depending on the commanded instrument mode. The spacelook calibrations are reported every two minutes in GVAR. The Imager performs Electronic Calibration (ECAL) and BB-Cal every 30 minutes, except when an image scan is in progress. When the scan is in progress, the calibrations are delayed until the end of the image frame. Star senses occur nominally every 30 minutes. These intervals vary somewhat depending on the scanning functions and star senses commanded from the ground. The SPS responds to data generated during these events by generating sequential, fixed sets of Block 11s. As the construction

of each set is completed, the SPS places the set in the appropriate priority output queue. For example, the three sequential sets resulting from an Imager spacelook calibration and the four sequential sets from an Imager BB-Cal are, respectively, as follows:

a. One Telemetry Statistics Block 11
b. Six Spacelook Statistics and Data Block 11s
c. One Calibration Coefficients and Limits Block 11

and

a. Two ECAL Statistics and Data Block 11s
b. Two BB Statistics and Data Block 11s
c. One Calibration Coefficients and Limits Block 11
d. Two Visible Normalization Look-Up Tables (NLUTs) Block 11s.

The block 11 for Imager factory coefficients has the lowest priority, and it will only be sent before the start of a frame if there is no other block 11 in the priority output queue.

The Sounder performs a spacelook calibration every two minutes, an ECAL and BB-Cal with every tenth spacelook, every 20 minutes, and a star sense every 30 minutes. As with the Imager, these intervals vary somewhat according to the Sounder commanded scanning functions; but, this variability is much less than for the Imager, because calibration sequences are permitted to interrupt a scan line at raw block boundaries. The GVAR Block 11 set, resulting from a star sense, consists of nine Star Sense Data and Statistics Block 11s. A Block 11 spacelook calibration set is comprised of the following:

a. One Telemetry Statistics Block 11
b. Five Spacelook Statistics and Data Block 11s
c. Two Calibration Coefficients and Limits Block 11s.

The Sounder performs an ECAL in conjunction with BB-Cal, with the corresponding GVAR Block 11 set comprised of the following:

a. Three ECAL Statistics and Data Block 11s
b. Five BB Statistics and Data Block 11s
c. Two Calibration Coefficients and Limits Block 11s
d. Nine Visible NLUTs Block 11s.

Figure 3-10 illustrates a typical Sounder scan sequence and the Block 11 output strings the SPS generates, with the effects of Imager and Sounder Compensation and Servo Error Data Block 11s ignored for clarity.

The following three points in conjunction with the sets mentioned impact the GVAR bandwidth usage:

a. Each set should occur at fairly regular intervals.
b. The sets are always generated in a particular sequence.
c. Each set is placed in the output queue as it is completed.

3.2.5 Bandwidth Considerations

The output bandwidth available for GVAR is 2,111,360 bps. All of the various GVAR block types must fit within this channel bandwidth without significant delays; otherwise, a data pileup occurs within the SPS, with a concomitant loss of data. The bandwidth requirements can be calculated for each of the instrument block types. For scan related data, the required bandwidth is a function of scan width (frame size). For non-scan data including calibrations, statistics, NLUTs, and star senses, the required bandwidths can be treated as a constant time-dependent overhead. The non-instrument data and messages can be characterized indirectly according to the bandwidth of the associated ingest channels.

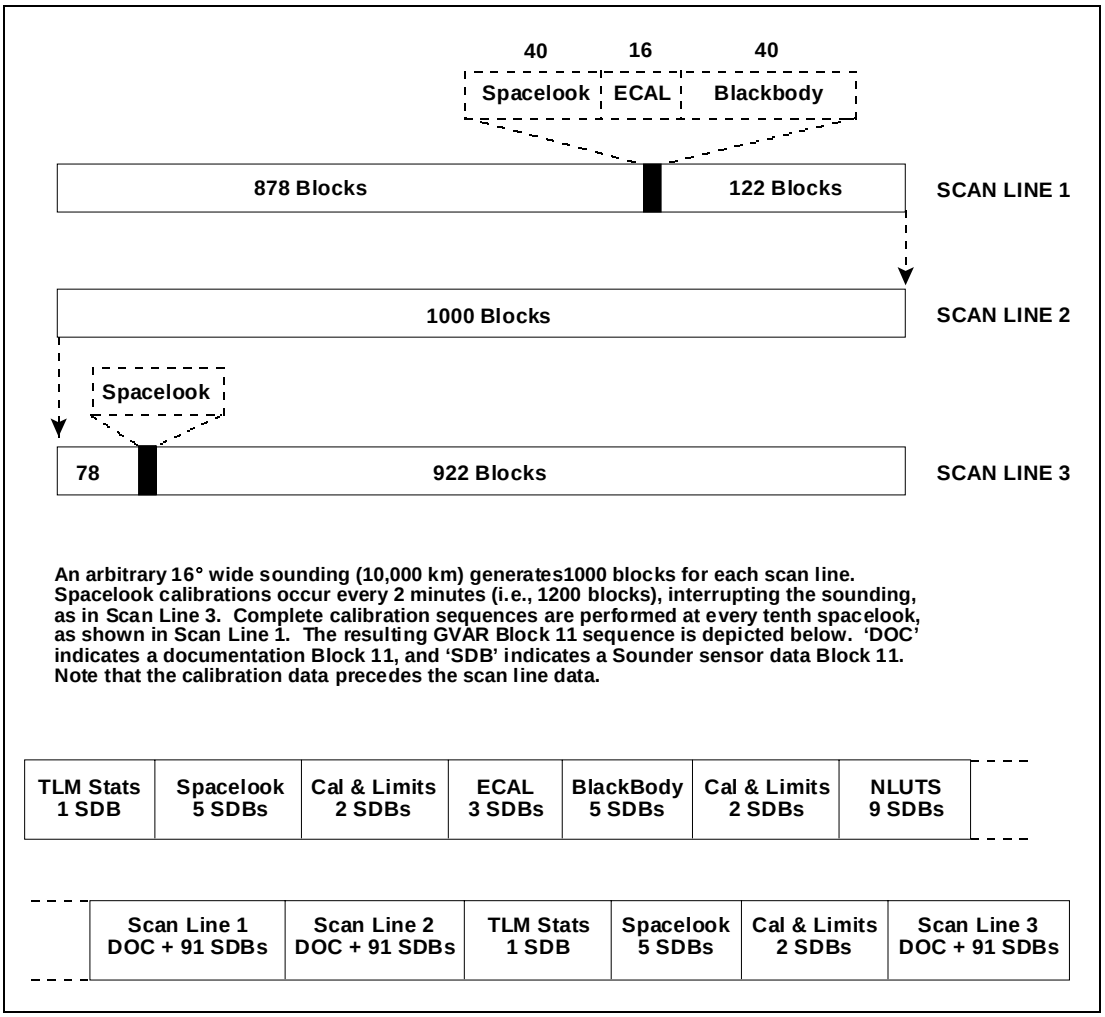

KEY TO ACRONYMS AND ABBREVIATIONS	
DOC	documentation Block 11
SDB	Sounder sensor data Block 11
TLM	Telemetry

Figure 3-10. Typical Sounder Scan Scenario

Table 3-3 provides the equations describing the Imager bandwidth requirements, including the requirements directly related to instrument scan functions (Blocks 0 – 10 and compensation terms); and, the relatively scan-independent, Block 11 overheads. As previously mentioned, Imager Blocks 1 – 10 vary in length in direct proportion to image scan width, except for a lower limit of 32,208-bits. This block size includes Overhead (O/H) consisting of a 10,032-bit block synchronization code, a 720-bit block header, and a 16-bit block Cyclic Redundancy Check (CRC). The lower limit ensures a minimum block processing time of 15.25 msec at a GVAR receiver. This equates to a maximum block rate of 65.6 GVAR blocks per second and forces a Minimum Data Field Length (MDFL) of 21,440-bits per block; or, one third of the Block 0 and 11 fixed data field length of 64,320-bits. For Imager scan widths of less than approximately 1.9°, this requires GVAR block lengths greater than is warranted by the data contained. The excess space is zero filled. The effect of the MDFL imposition is to raise the bandwidth overhead for small Imager scans.

Table 3-4 provides equations for the Sounder bandwidth requirements. Since all of the Sounder data is transported through Block 11s, no direct MDFL requirement is involved. An MDFL requirement exists to the extent that the Blocks 11s employed are under-utilized when transporting the various data types.

The equations provided in Table 3-3 and Table 3-4 ignore instrument dead times. During instrument dead times no data is produced for GVAR transmission. These dead times are generally associated with the slewing of the instrument scan mirror to or from a location where a function is performed; such as star senses, spacelooks, or BB-Cal. The Imager has additional dead times at the frame start and restart, after a spacelook, star sense, and priority interruption. During these times the Imager generates three invalid scans before generating a valid scan. As a result of these simplifications, the equations provide a conservative (slightly high) value of the bandwidth requirements.

It can be assumed that both the Imager and Sounder possess a bandwidth requirement component dependent on the associated frame scan width and a component that is nearly independent of the frame scan width. To assess the bandwidth utilized by GVAR transmissions, each instrument's requirements are computed over the full range of scan widths. The total bandwidth requirement for any combination of frame scan widths can then be computed.

Figure 3-11 provides the GVAR bandwidth utilization as a function of scan width angle derived using the equations provided in Table 3-3 and Table 3-4. It denotes the percentage of the total GVAR bandwidth required as the scanning width is varied from 0.2° to 19.2° for the Imager and Sounder, as well as the total for both. The spare bandwidth is also shown. Figure 3-12 shows on a larger scale the spare GVAR bandwidth in units of Kbps and block11/sec as a function of scan width angle. Since the Imager and Sounder scan widths can be set independently, there are situations where the total bandwidth requirement could exceed the available 2,111,360 bps bandwidth. These regions, or exclusion zones, arise from the following primary sources of GVAR overhead:

a. 10,032-bit block synchronization code (13.4% of each Block 11)
b. 21,440-bit MDFL requirement imposed on small GVAR Blocks 1 – 10
c. Sounder documentation Block 11 prefixing each Sounder scan line output.

Table 3-3. Imager GVAR Bandwidth Requirements

General Bandwidth Requirements	Range of Values
MDFL = Minimum Data Field Length (bits)	21,440
ISWD = Imager Scan Width (degrees)	0.2° to 19.2°
IRB = Imager Raw Data (raw blocks)	ISWD (17453.29252 / 64)
IST = Imager Scan Time (seconds)	0.2 + ISWD / 20.02
BOH = Block Overhead (bits)	10,768
NPIR = Number of Primary IR detectors	7 for GOES I-N 8 for GOES-O and beyond
Imager Block 0 – 10 Bandwidth Requirements:	
If ISWD = 0, then B0 = B1 = B2 = B3 = 0; otherwise	
B0 = Block 0 data length (bits)	64,320
B1 = Block 1 data length (bits)	MDFL if MDFL > 4*(160 + 10 IRB)
	else 4*(160+10 IRB)
B2 = Block 2 data length (bits)	MDFL if MDFL >(NPIR-4) (160 + 10 IRB)
	else (NPIR-4) (160+10 IRB)
B3 = Block 3 data length (bits)	MDFL if MDFL > (160 + 40 IRB)
	else (160 + 40 IRB)
ISCAN = Total B0 B10 length (bits)	B0 + B1 + B2 + 8B3 + (11 BOH)
ISTT = GVAR Tx time (seconds)	ISCAN / 2111360
ISTSN = Spare time/scan (seconds)	IST- ISTT
ISTSC = Spare time/second (seconds)	ISTSN / IST
Imager Block 11 Bandwidth Requirements – in Units of Block 11s per second	
ICSE = Imager Compensation and Servo Errors	1 / 4.3
ITLM = Imager Telemetry Statistics	1 / 120
ISPC = Imager Spacelook Statistics and Data	6 / 120 GOES I-N 7/ 120 GOES-O and Beyond
IECL = Imager ECAL Statistics and Data	2 / 600 GOES I-N 3 / 600 GOES-O and Beyond
IBBC = Imager BB Statistics and Data	2 / 600 GOES I-N 3 / 600 GOES-O and Beyond
ICAL = Imager Cal Coefficients and Limits	1 / 120 + 1 / 600
INUT = Visible NLUTs	2 / 600
ISTR = Star Sense Statistics and Data	9 / 1800
IB11OH = Imager Block 11 Overhead = SUM (ICSE · · ISTR)	= 0.31589 GOES I-L = 0.31867 GOES-M = 0.33034 GOES-O and Beyond

Notes:

17453.29252	– the number of µrads/degree
64	– the number of µrads/raw data block
0.2	– the instrument scan reversal time
20.02	– the instrument scan rate in degrees/second.
BOH	– the block synch + header + CRC (10,032 + 720 + 16)
SUM	– a function summing all included components

In GOES-M and beyond, a new Block 11 (Imager Factory Coefficients Block 11) is added. It is transmitted at low priority when no scans are active, and is guaranteed to simply replace a fill block and have no bandwidth impact.

Table 3-4. Sounder GVAR Bandwidth Requirements

General Bandwidth Requirements	Range of Values
SSWD = Sounder Scan Width (degrees)	0.2° to 19.2°
SRB = Sounder Raw Data (blocks)	SSWD (17453.29252 / 280)
SST = Sounder Scan Time (seconds)	0.1 (SRB + 1)
Sounder Block 11 Bandwidth Requirements – in Units of Block 11s per second	
SSCAN = Sounder Documentation/Scan	(1 + RND(0.4091 + SRB / 11)) / SST
SCSE = Sounder Compensation/Servo Errors	1 / 6.4
STLM = Sounder Telemetry Statistics	1 / 120
SSPC = Sounder Spacelook Statistics/Data	5 / 120
SECL = Sounder ECAL Statistics/Data	3 / 1200
SBBC = Sounder BB Statistics/Data	5 / 1200
SCAL = Sounder Cal Coefficients/Limits	2 / 120 + 2 / 1200
SNUT = Sounder Visible NLUTs	9 / 1200
SSTR = Sounder Star Statistics/Data	9 / 1800
SBOH = Sounder Block 11 Overhead	SUM (SSCAN : SSTR)
GVAR Bandwidth Requirements - in bps	
Imager = IBW	(1 - ISTSC) * 2111360 + 75088 IB11OH
Sounder = SBW	75088 SBOH
Spare	2111360 - IBW - SBW

Notes:

17453.29252	– number of µrads/degree
280	– number of µrads/raw data block
0.1	– instrument raw data block time
RND	– a function rounding to nearest integer
0.4091	– a factor to force a rounding up if there is one extra raw block
SUM	– a function summing all included components
2,111,360	– the available GVAR output rate in bps
75,088	– the total length of any Block 11 (64,320 + BOH)

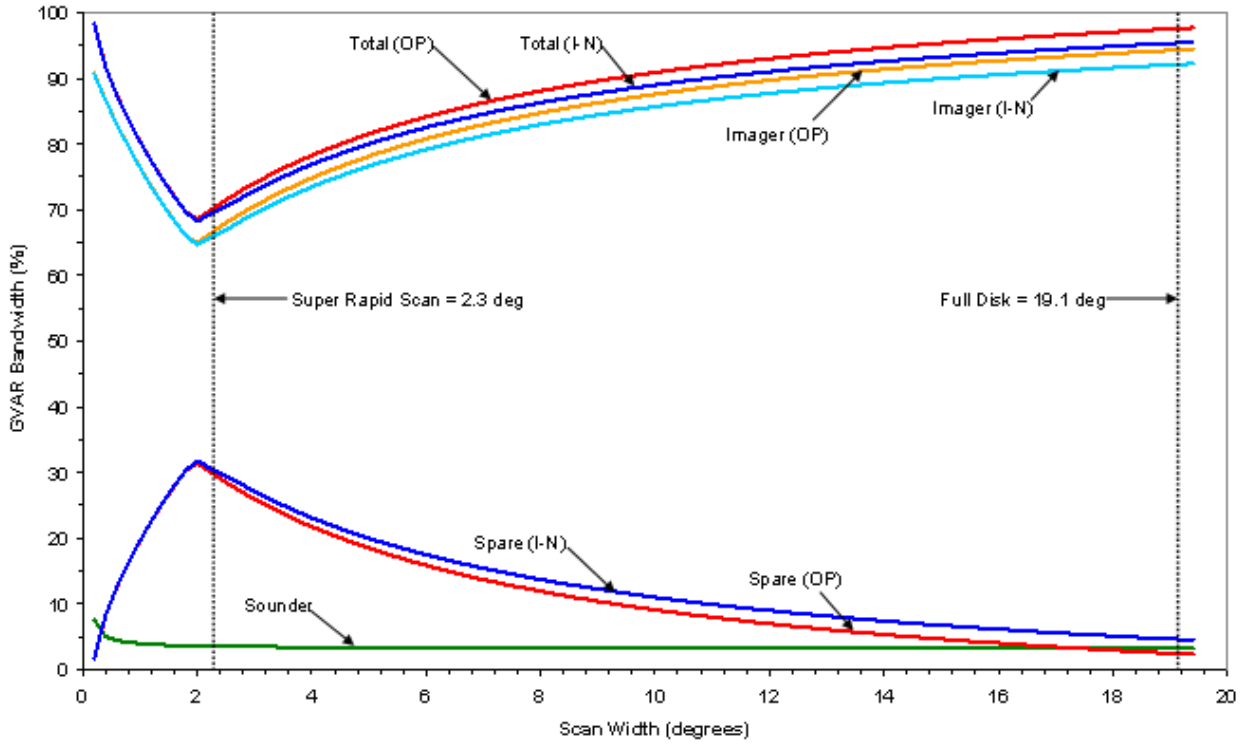

Note: Total = Imager + Sounder

Figure 3-11. GVAR Bandwidth Utilization (GOES I-P)

Of the three sources of overhead, the most negative effects are found at small scan widths where the overheads outweigh the instrument data being transported. For the Imager, the synchronization code and the MDFL represent over 90% of the bandwidth requirement for a 0.2° scan width. A similar scan width for the Sounder yields 57% of the bandwidth requirement being allocated for non-instrument data. As the instrument scan widths are increased, the percentage of the GVAR output bandwidth allocated to overhead declines, approaching 5% for the Imager visible data and 13.4% for Sounder scan data.

In addition to the instrument data, the GVAR stream must also provide transport for text messages, from the SPS operator and GIMTACS. The text messages are low rate in the sense that the ingest channel available for their reception at the SPS is narrow, only 9600 bps. Additionally, their expected frequency of occurrence is very small. To provide room for each of these three sources within the GVAR stream, an allocation of one Block 11 per second should be conservatively safe.

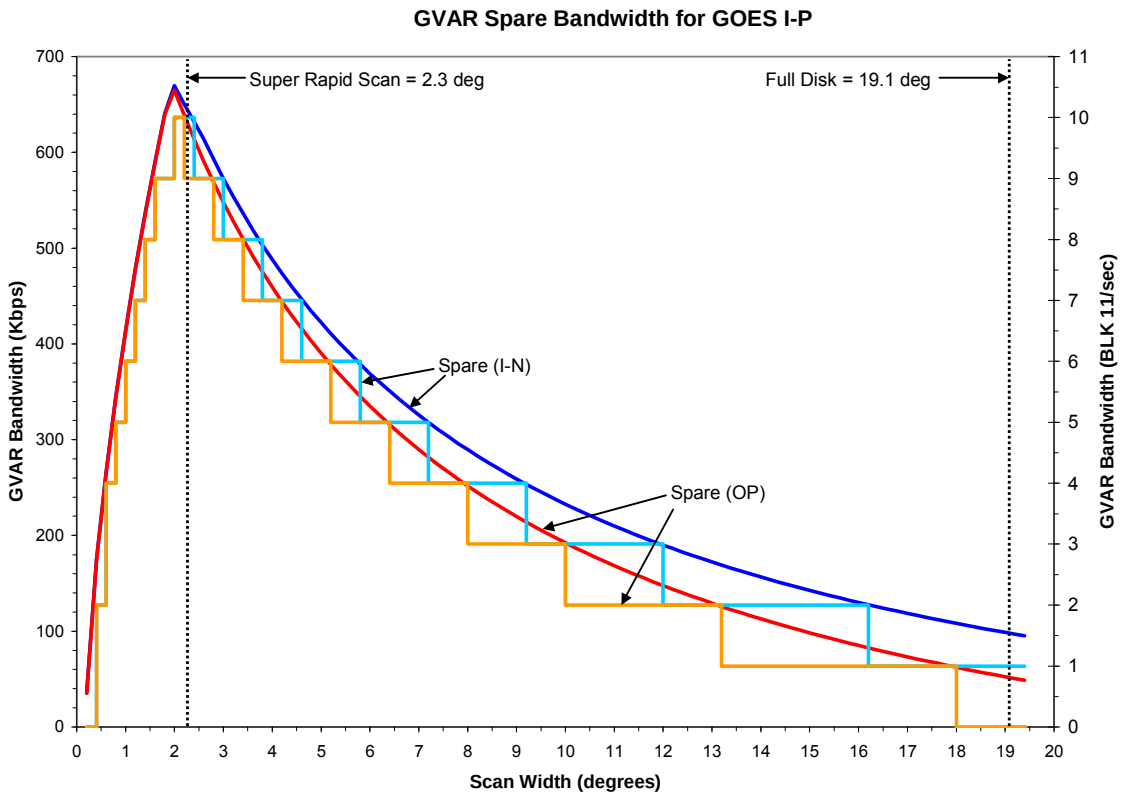

Figure 3-12. GVAR Spare Bandwidth (GOES I-P)

With this in mind, adequate bandwidth exists to support all functions for both instruments as well as the text data if the following scan width constraints are followed:

Imager: No constraints if Sounder is inactive, not scanning. If the Sounder is active, Imager scan widths should be greater than 0.3°.

Sounder: No constraints if the Imager is inactive. If the Imager is active with a scan width of less than 14.4°, the Sounder scan widths need to be greater than 0.3°. If the Imager scan widths are greater than 14.4°, the Sounder scan widths need to be greater than 0.6°.

It should be realized that these constraints can be relaxed up to the exclusionary zone boundaries without loss of any instrument data. The only penalty invoked by doing so is the amount of time required to complete the transmission of any text that may be ready for GVAR output.

3.2.6 Transmission Delays

The GVAR formatted data is received by a user after some variable time delay from the point at which the data was actually measured by the onboard instruments. There are two primary components in the delay time, transit time and SPS processing time.

Delays caused by signal transit times are in the range from 0.5 to 1.0 seconds and include the following three stages:

a. Satellite-to-SPS: raw data
b. SPS-to-Satellite: GVAR transmission
c. Satellite-to-user: GVAR transmission.

The largest time delay component occurs in the SPS processing that transforms the raw data into GVAR formatted data. The Imager data contained within Blocks 1 – 10 is calibrated and data ordered in a W-E sequence. Calibration is performed on the data after it is received within the SPS, and a drift bias measurement has been acquired. The SPS buffers all Imager scan data until it computes the drift bias measurement. The time required to obtain the drift bias measurement varies as a function of the current frame type and can range from approximately 1 – 37 seconds. After IR calibration has been performed, the transmission of Blocks 0 – 10 is enabled.

The SPS performs a similar buffering process on the Sounder data, primarily to permit W-E ordering. Sounder data calibration is performed after all of the raw data for a scan has been received. The calibration procedure generates 76 arrays, one array for each Sounder Channel-Detector (CDET), of calibrated pixel information. These arrays, along with the original raw Sounder data blocks, are then sectioned and packaged into the Sounder Scan Data Block 11 format. A full-width, 19.2°, single-dwell Sounder scan requires 110 Block 11s for complete transmission. The buffering process for an uninterrupted Sounder scan of the above type can extend to as long as 120 seconds. The subsequent calibration and Block 11 sectioning would take between 10 and 15 seconds to perform. Finally, transmission of the 110 Block 11s could take anywhere from 3.9 – 52.9 seconds, depending on the current GVAR output requirements.

For GOES I-M satellites with high inclination angle (larger than 2.0 degrees), the onboard IMC operation is no-longer possible. SPS performs the equivalent IMC operation for Imager data in both visible and IR channels, which is called the eXtended GOES High Inclination (XGOHI) process. The XGOHI process in SPS causes the additional time delay, and the delay is generally proportional to the inclination angles; which ranges about 3 minutes for satellites with 2.0 degrees of inclination to about 6 minutes for satellites with 6.0 degrees of inclination.

3.2.7 Encoding

Prior to bi-phase modulation and uplink of the GVAR stream, the GVAR data undergoes three stages of encoding, as described below and illustrated in Figure 3-13:

a. All even numbered 8-bit bytes, regardless of word length, are complemented; the first byte following initial synchronization being byte number one.

b. PN coding with a PN sequence generated by a shift register whose input is the output of an eXclusive-OR (XOR) gate as shown in Figure 3-13. Bits 8 and 15, the Most Significant Bits (MSBs) of the shift register, are the inputs to this gate. The output of the gate is combined with a data line using a second XOR gate.

c. The PN-coded data stream is passed through an NRZ-S differential encoding process, producing a transition for each logic zero input and none otherwise.

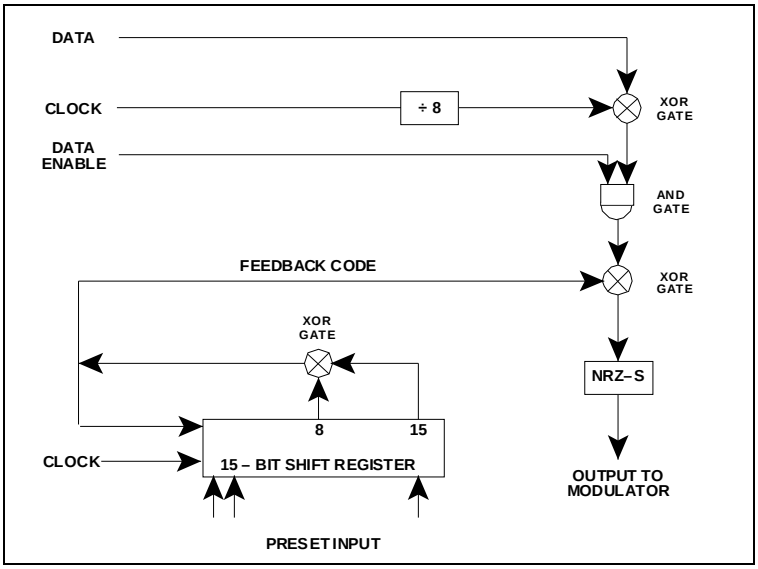

Figure 3-13. GVAR Block Synchronization Preamble Encoding

3.3 Block Format

Each GVAR block contains the following, primary fields:

a. Block Synchronization Code
b. Header
c. Data Section
d. Cyclic Redundancy Check.

Fields one, two, and four are fixed in size and have an internal structure identical for all GVAR blocks. Field three, the Data Section, has an internal substructure dependent on the block type. GVAR Blocks 1 – 10 have data sections with constant internal structures, but whose sizes vary as a function of the Imager's scan line length. Blocks 0 and 11 have fixed, equal-length data sections. Block 0 maintains an unchanging structure, and Block 11 has a number of different internal structures defined according to the usage of the block.

The following sections describe the four primary fields with the data field presented last because the definitions constitute the bulk of the document.

3.3.1 Block Synchronization Code

Each GVAR block is prefaced with a 10,032-bit code for synchronizing the receive equipment. The code is a PN sequence generated as described in Section 3.2.7 and shown in Figure 3-13. The shift register is preset to 51,665 octal.

3.3.2 Block Header

The GVAR header has been defined to maintain compatibility with the AAA format header. It consists of 30 eight-bit words, three copies of which are transmitted in each header field to increase the chances of error-free recovery. An error check field completes each header. Figure 3-14 depicts the header organization, and Table 3-5 describes the header contents.

Two additional fields are defined in words in the GVAR header that are unused in the AAA format. The *range* word was added to support satellite ranging functions. It contains information which is only useful to the OGE. A GVAR block sequence counter has been added to permit a receiver to determine the number of GVAR blocks which have been transmitted. The GVAR variability in block sequence and length prevents usage of a timed counter as was permitted by AAA.

```
WORD
     |---------------------------------------------|
  1  |             BLOCK IDENTIFICATION            |
     |---------------------------------------------|
  2  |                  WORD SIZE                  |
     |---------------------------------------------|
  3  |                                             |
  4  |                  WORD COUNT                 |
     |---------------------------------------------|
  5  |                                             |
  6  |             PRODUCT IDENTIFICATION          |
     |---------------------------------------------|
  7  |                  REPEAT FLAG                |
     |---------------------------------------------|
  8  |                 VERSION NUMBER              |
     |---------------------------------------------|
  9  |                 DATA VALID FLAG             |
     |---------------------------------------------|
 10  |               ASCII / BINARY FLAG           |
     |---------------------------------------------|
 11  |                     SPS ID                  |
     |---------------------------------------------|
 12  |                   RANGE WORD                |
     |---------------------------------------------|
 13  |             VALID BLOCK SEQUENCE            |
 14  |                   COUNTER                   |
     |---------------------------------------------|
 15  |                   SPARES                    |
 16  |                                             |
     |---------------------------------------------|
 17  |               CURRENT SPS TIME              |
  .  |              (CDA BCD TIME CODE)            |
  .  |                                             |
  .  |                                             |
 24  |---------------------------------------------|
 25  |                   SPARES                    |
  .  |                                             |
 28  |                                             |
     |---------------------------------------------|
 29  |                 ERROR CHECK                 |
     |                   FIELD                     |
     |                                             |
 30  |---------------------------------------------|
```

Figure 3-14. Header Organization

Table 3-5. Header Content

Word	Contents	Description
1	Block ID	An 8-bit binary number used to identify a GVAR block as follows: 240 = GVAR Block 0 1 = GVAR Block 1 2 = GVAR Block 2 3 = GVAR Block 3 4 = GVAR Block 4 5 = GVAR Block 5 6 = GVAR Block 6 7 = GVAR Block 7 8 = GVAR Block 8 9 = GVAR Block 9 10 = GVAR Block 10 11 = GVAR Block 11 15 = Equipment Idle Block*
2	Word Size	An 8-bit binary number giving the word bit length of the subsequent information field as follows: 6 = 6-bit word size 8 = 8-bit word size 10 = 10-bit word size
3-4	Word Count	A 16-bit binary number giving the number of words contained in the subsequent information field plus two. The extra two represents the two 8-bit words containing the block CRC.
5-6	Product ID	A 16-bit binary number used to identify information field data. Numbers used are as follows: 0 = No Data 1 = AAA IR Data 2 = AAA Visible Data 3 = GVAR Imager Documentation 4 = GVAR Imager IR Data 5 = GVAR Imager Visible Data 6 = GVAR Sounder Documentation 7 = GVAR Sounder Scan Data 8 = GVAR Compensation Data 9 = GVAR Telemetry Statistics 10 = Not Used (was GVAR AUX Text) 11 = GIMTACS Text 12 = SPS Text 13 = AAA Sounding Products 14 = GVAR ECAL Data 15 = GVAR Spacelook Data 16 = GVAR BB Data 17 = GVAR Calibration Coefficients 18 = GVAR Visible NLUTs 19 = GVAR Star Sense Data 20 = Imager Factory Coefficients 21–1000 = Unassigned

Notes:

* The Equipment Idle Block (EIB - Block 15) is generated automatically by the GVAR transmission hardware when no other block definitions are present. The EIB is 32,208-bits in length and includes 21,440 zero data bits.

Word	Contents	Description
7	Repeat Flag	An 8-bit flag that indicates whether the data being transmitted is new data or a repeat of data previously transmitted: 0 = Data Repeat 1 = New Data
8	Version Number	An 8-bit binary number that indicates GVAR version. See Section 3.1.1 for explanation: 0 = GOES I through L original specification 1 = GOES I thru L MBCC information added 2 = GOES M-N 3 = GOES O-P
9	Data Valid	The following 8-bit flag which indicates whether the transmitted data is usable or only filler: 0 = Filler Data 1 = Valid Data
10	ASCII/Binary	The following 8-bit flag that indicates the format of the data in the data field to be either ASCII or binary: 0 = Binary Data 1 = ASCII Data
11	SPS ID	A binary number identifying the source SPS, which formats the GVAR stream. Values 1 to 9 denote SPS1 to SPS9, respectively.
12	Range Word	An 8-bit word used for ranging functions. The first 4-bits are a binary number identifying the data source spacecraft. The last four digits are always zero except when a ranging function is in progress; then, they are set to ones according to the type of ranging function. The first 4-bits have a value as follows: 8 = GOES-I 9 = GOES-J 10 = GOES-K 11 = GOES-L 12 = GOES-M 13 = GOES-N 14 = GOES-O 15 = GOES-P The last 4-bits have the following possible hexadecimal values: 0 = Not a measurement block 7 = Satellite ranging measurement block F = Ground path delay measurement block
13-14	Block Count	A 16-bit continuous count of GVAR blocks transmitted. Values range from 0 to 65,535, inclusive, rolling over to 0 following 65,535. Count is incremented by 1 for each successive GVAR block transmitted. Count does not increment for Equipment Idle Blocks.
15-16	None	Spares – not used
17-24	SPS Time	A 64-bit BCD time code applied at CDA at transmission time.
25–28	None	Spares – not used
29–30	Error Check	A 16-bit error checking field used to validate transmission accuracy of the header information. This is derived in the same way as the information field error check, CRC. See Section 3.3.3.

3.3.3 Block Cyclic Redundancy Check

The error detection method employed in the GVAR transmission involves a CRC. The process is an algebraic procedure based on modulo-2 division using a polynomial to generate and check the FCS. At the transmitter, the initial remainder of the division is preset to 16 ones. After the all-ones preset, the initial remainder is then modified by division of the generator polynomial. This division is performed on the contents of the field being checked. Upon completion of the division process, the ones complement of the resulting remainder is transmitted as the 16-bit FCS.

The generator polynomial is then specified by International Telegraph and Telephone Consultative Committee (CCITT) Recommendation V41 and is as follows:

$$x^{16} + x^{12} + x^{5} + 1$$

3.3.4 Block 0 Data Section

The GVAR Block 0 information field is 64,320-bits in length. It consists of 8040 8-bit words divided into the following partitions:

Words	Description
1–278	Instrument and Scan Status
279–1626	Instrument O&A Data
1627–2306	Scan Reference Data
2307–5386	Grid Data
5387–6304	Scan Reference and Calibration Data
6305–8040	Factory Parameters/8th IR detector Calibration Data

GVAR versions 1 through 2 include Factory Parameters in Words 6305-8040, but in version 3 (**GOES-O**), the words contain Calibration Data for the eighth IR detector, the imager detector offsets, and nadir positions. The layout and definition of these six partitions is provided in Table 3-6, Table 3-7, and Table 3-8. Supporting commentary is provided in the following subsections.

ESPS / XGOHI add information to GVAR words 7267-7307. This information includes 1 word for the current status of Resampling: 1 bit Resample on/off, one bit Resample commanded on/off, 6 bit Resampling kernel ID; followed by 32 words for time tag correction coefficients, and 12 words (reserved) for spacelook scheduling information.

3.3.4.1 Instrument and Scan Status

This partition summarizes the state of the Imager and the current imaging frame. Time tags denoting significant events and identifying various process entities are provided. Additionally, coordinate information locating points are included for the various reference frames.

The flag bits in words 3 – 6 provide the primary status for the accompanying Block 1 – 10 data. They denote the presence of normal or priority frame data and provide frame-start/frame-end

indicators. They are also used to denote whether or not a data loss condition has been detected. The detector relevant flags in bits 14 – 31 are controlled by the OGE operators. They indicate the type of processing performed by the SPS on the raw detector data, such as whether or not visible normalization and IR calibration have been performed. The side 1 or side 2 flag denotes which set of IR detectors the SPS currently considers to be active; and, also indicates the output scan formation approach and database coefficients for conversions. The condition of the imaging detector data, valid or substituted, is also indicated by these flags.

3.3.4.2 Instrument O&A Data

This partition contains the parameters and coefficients currently in use which describe the Imager O&A data. The data in this section is acquired from the OATS. How the data is used depends upon the status of the IMC function. If IMC is active, the O&A data is valid for a fixed period called the registration interval. If IMC is not active, the O&A values only apply to a single point in time. Under these conditions, the O&A information must be translated through time to the desired calculation point.

3.3.4.3 Scan Reference Data

This partition provides co-registration table identity and the E-W co-registration offset terms currently available to the SPS. The N-S offsets are contained in the fifth partition, words 6235 – 6282. The co-registration index, word 1679, denotes which of the 48 offsets is currently in use. If this word is zero, co-registration functions are disabled.

Also contained in this partition are copies of the current and latest lagged raw header and trailer data associated with the output scan contained in GVAR Blocks 1 – 10. The raw contents of the most recent telemetry data blocks are also provided, including copies of the four command registers. The oldest lagged header and trailer data blocks are included in the fifth partition.

3.3.4.4 Grid Data

The grid data partition provides up to 1024 grid points. A grid point in this context refers to a particular feature of the Earth's surface whose geographic latitude and longitude coordinates are known. If an Imager swath intersects this feature, the particular pixel having the same geographic coordinates is recorded as a grid point. All grid point intersections are associated with the Imager visible data contained in GVAR Blocks 3 – 10.

The gridding partition contains two sets of two arrays, each set recording up to 512 intersections associated with a particular grid point database. The two arrays, comprising a set, are parallel in that the ith entry in one denotes the intersecting detector, while the ith entry in the other denotes which pixel for that detector actually intersected the feature.

3.3.4.5 Scan Reference and Calibration Data

This partition starts with the oldest lagged header and trailer data blocks associated with the current output scan. It ends with the N-S co-registration offset array. In between are the IR calibration data sets associated with the output scan.

Each Imager output scan in the GVAR data stream has a specific set of calibration terms assigned to the IR data. These terms (bias, first- and second-order gains, and bias rates) are provided in this partition. Included with the terms are the statistics for the clamped and drift bias measurements from which the bias rates were computed, and interpolated western edge bias terms.

3.3.4.6 Factory Parameters

Through **GOES-N**, this partition provides factory measured calibration coefficients for each of the 22 imaging detectors along with the misalignments of the detectors with respect to the instruments optical axis. The coefficients required to convert raw telemetry counts to engineering units are provided for those points employed during formation of GVAR data. Starting with **GOES-M**, this data also appears in a separate Block 11. Starting with **GOES-O**, the Factory Parameters are replaced in Block 0 with calibration data for an additional IR imager detector, the misalignments of the 24 detectors with respect to the instrument optical axis, and the instrument nadir positions.

3.3.4.7 XGOHI Parameters

XGOHI adds information to GVAR words 7267-7307. This information includes 1 word for the current status of Resampling GOES data viewed at high inclinations, 6-bits for Resampling kernel ID, 32 words (8 X 4) for time tag correction coefficients, and 12 words (reserved) for spacelook scheduling information. See notes below:

1. Resampling status word has one bit Resampler on/off flag, one bit Resampling commanded on/off flag, 6 bit Resampling Kernel ID.
2. Frame corners and frame time tag are the same in space and as resampled per the current GSU design.
3. Time-tag coefficient added one parameter for denominator of rational polynomial function (lead coefficient is no longer assumed 1).
4. Spacelook documentation needs still under reconsideration. RPM can auto-detect spacelooks and users can consult other fields already in GVAR as desired:

B0 TISPC = Time of last spacelook

3.3.4.8 Spacelook Auto-Detect Considerations

Identify spacelook parameters from B0 header times:

- Scan number with last spacelook
- Scans between spacelooks
- Time taken by spacelook.

Time-tag correction coefficients give numbers of scans to point ahead or behind current B0.

When Resampling points behind, B0 header times are used as Look-Up Table (LUT) for time-tag corrections. This has spacelooks built in.

When Resampling points ahead, B0 header times are extrapolated using vertical scan rate, time between spacelooks, and time for spacelook determined from B0 header time history. At the beginning of frame, before second spacelook, spacelook parameters are unknown; so, no spacelook is assumed. Introduces an error proportional to the number of spacelooks crossed, but only in this case. At 4 degrees inclination, one can cross two spacelooks. At ~1 sec per spacelook, error is ~2 to 3 sec, still < 5 sec requirement.

3.3.5 Blocks 1 and 2 – Imager IR Data

Imager data from the active IR detectors is carried in the information fields of GVAR Blocks 1 and 2. Data for each of the detectors is packaged using the same two-partition record format. The first partition provides line documentation information. The second partition contains the detector data.

The grouping of the detector data records within each block is illustrated in Figure 3-15 and Figure 3-16 along with a depiction of the record layout. Also indicated in the figure is the number (1-7) used by the SPS for each detector in the normal and yaw-flipped modes.

Table 3-6. Imager Documentation Block 0 (Words 0-6304) Format Definition

Word	Name	Description
1	SPCID	Spacecraft ID - a binary number identifying the source satellite as follows: 8 = GOES-I 9 = GOES-J 10 = GOES-K 11 = GOES-L 12 = GOES-M 13 = GOES-N 14 = GOES-O 15 = GOES-P
2	SPSID	SPS Identity: a binary number identifying the source SPS which formatted the GVAR data stream. Values 1–9 are assigned to SPS1–SPS9, respectively.
3–6	ISCAN	Imager Scan status is provided in four words (32-bits); bit 0 is the Most Significant Bit (MSB) of word 3, and bit 31 is the Least Significant Bit (LSB) of word 6. For each status bit that does not have a bit value of 0 listed below, a value of 0 represents a condition that is the opposite, or negative of the condition associated with a bit value of 1. For example, if bit 0 has a value of 1, a frame start occurred on this scan; if bit 0 has a value of 0, no frame start occurred on this scan. **Bit** **Value** **Condition** 0 = 1 if frame start 1 = 1 if frame end 2 = 1 if frame break - line(s) lost 3 = 1 if pixel(s) lost 4 = 1 if priority 1 frame data 5 = 1 if priority 2 frame data 6 = 0 if West-to-East scan = 1 if East-to-West scan 7 = 0 if North-to-South frame = 1 if South-to-North frame 8 = 1 if IMC active 9 = 1 if lost header block 10 = 1 if lost trailer block 11 = 1 if lost telemetry data 12 = 1 if (star sense) time break 13 = 0 if side 1 (primary) active = 1 if side 2 (secondary) active 14 = 1 if visible normalization active 15 = 1 if IR calibration active 16 = 1 if yaw flip processing enabled 17–23 = Correspond to active IR detectors 1–7. A set bit indicates the associated detector data is invalid. 24–31 = Correspond to visible detectors 1–8. A set bit indicates the associated detector data is invalid. (GOES O-P, 8th IR det @ wd#6305)
7-22	IDSUB	A 16-entry detector substitution matrix. The first entry denotes the number of substitutions in effect (ranges 0 = none to 15 = all for GOES I-N and 16 = all for GOES O-P). The last 15 entries are sequentially assigned to detectors IR1 – IR7, V1 – V8). A non-zero value indicates the associated detector data in Blocks 1 – 10 is substituted data acquired from the detector whose number is entered. GOES O-P, 8th IR det @ wd#6306.

Word	Bits	BCD Formatted Contents
Words 23 – 150 provide CDA time tags for 16 specific events. Each time tag is eight words in length, formatted as follows:		
1	0-3 4-7	Year in 1000s Year in 100s
2	0-3 4-7	Year in 10s Year in 1s
3	0-3 4-7	Day of Year (DOY) in 100s, bit 0 = 1 indicates the time code generator is flywheeling DOY in 10s
4	0-3 4-7	DOY in 1s Hours in 10s
5	0-3 4-7	Hours in 1s Minutes in 10s
6	0-3 4-7	Minutes in 1s Seconds in 10s
7	0-3 4-7	Seconds in 1s Msec in 100s
8	0-3 4-7	Msec in 10s Msec in 1s

Word	Name	Description
23-30	TCURR	Current SPS time
31-38	TCHED	Time of current header block
39-46	TCTRL	Time of current trailer block
47-54	TLHED	Time of lagged header block
55-62	TLTRL	Time of lagged trailer block
63-70	TIPFS	Time of priority frame start
71-78	TINFS	Time of normal frame start
79-86	TISPC	Time of last spacelook calibration
87-94	TIECL	Time of last ECAL
95-102	TIBBC	Time of last BB-Cal
103-110	TISTR	Time of last star sense
111-118	TIRAN	Time of last ranging measurement
119-126	TIIRT	Time tag of current IR calibration set
127-134	TIVIT	Time tag of current visible NLUT set
135-142	TCLMT	Time tag of current Limits sets
143-150	TIONA	Time tag current O&A set implemented
The following 128 words provide information associated with the Imager's reference frames and the current imaging frame:		
151-152	RISCT	Relative output scan sequence count since frame start. Ranges 1-1974.
153-154	AISCT	Absolute number of the current output scan. Values of 1-1974 correspond to output scans (northernmost to southernmost).
155-156	INSLN	The number of the northernmost visible detector scan line in the current scan. Inclusive values of 1 to 15,780 correspond to detector lines (northernmost to southernmost).

Word	Name	Description
157-158	IWFPX	The number of the westernmost visible pixel in the current frame. Inclusive values of 1 to 30,677 correspond to the pixels (westernmost to easternmost).
159-160	IEFPX	The number of the easternmost visible pixel in the current frame. Inclusive values of 4 to 30,680 correspond to the pixels (westernmost to easternmost).
161-162	INFLN	The number of the northernmost visible detector scan line in the current frame. Inclusive values of 1-15,780 correspond to detector lines (northernmost to southernmost).
163-164	ISFLN	The number of the southernmost visible detector scan line in the current frame. Inclusive values of 8 to 15,787 correspond to detector lines (northernmost to southernmost).
165-166	IMDPX	The number of the visible pixel corresponding to an instrument azimuth of 0°. Nominal value, ½ full range, is 15,340. This value is an instrument-specific constant.
167-168	IMDLN	The number of the scan line corresponding to an instrument elevation of 0°. Nominal value, ½ full range, is 7894. This value is an instrument-specific constant.
169-170	IMDCT	The number of the output scan corresponding to an instrument elevation of 0°. Nominal value, ½ full range, is 987. This value is an instrument-specific constant.
The following four terms (words 171-182) are computed using the current O&A set. If IMC is active, the terms reflect the reference subsatellite point position. If IMC is off, the terms reflect the actual subsatellite point.		
171-172	IGVLN	The number of the visible detector scan line intersecting the subsatellite point.
173-174	IGVPX	The number of the visible pixel intersecting the subsatellite point.
175-178	SUBLA	The subsatellite point latitude value is a floating point number with units of degrees.
179-182	SUBLO	The subsatellite point longitude value is a floating point number with units of degrees.
183	CZONE	Current compensation zone (0–32) is an 8-bit integer number. A zero value indicates that no compensation is being performed. Values 1–32 denote the latitudinal zone for which corrections are applied.
184	V1PHY	The physical detector number 1–8 assigned to GVAR Block 3.
185-186	G1CNT	GRID 1 active entry count 0–512 is a 16-bit integer number. See words 2307–5386.
187-188	G2CNT	GRID 2 active entry count 0–512 is a 16-bit integer number. See words 2307–5386.
189-190	PBIAS	E-W grid bias (0 ± 12546 pixels) is a signed 15-bit integer number denoting the pixel offset employed for the grid data. A value of zero indicates the grid is not shifted from the locations computed using the current O&A.
191–192	LBIAS	N-S grid bias (0 ± 7892 pixels) is similar to E-W grid bias, except in the N-S direction.
193	ISCP1	Odd parity byte computed for words 3-4 (part of ISCAN).
194		Spare – not used
195–198	IDBER	Current raw data Bit Error Rate (BER) is a floating point number denoting the most recent measure of raw data error rate. Nominal values are on the order of 1.0E–6.
199–202	RANGE	Most recently computed range – a floating point value denoting the number of 50-MHz clock counts for signal transmission from satellite to ground.
203–206	GPATH	Most recent range calibration ground path delay: a floating point value denoting the number of 50-MHz clock counts that the GVAR signal takes to transit through CDA station equipment.

Word	Name	Description
207–210	XMSNE	The call tower range calibration value – a floating point value denoting the number of 50-MHz clock counts that the GVAR signal takes to transit the satellite transmission electronics.
211–218	TGPAT	CDA TOD of GPATH measurement, format as provided for words 23–30.
219–226	TXMSN	CDA TOD of XMSNE measurement, format as provided for words 23–30.
227–228	ISTIM	Current line scan time in integer msec computed as TCTRL – TCHED.
229	IFRAM	Current frame counter. Integer ranging from 0 to 255 identifying current frame; rolls over to 0 following 255.
230	IMODE	Current imaging mode. Integer value as follows: 1 = Routine 2 = Rapid scan operation 3 = Super rapid scan operation 4 = Checkout or special short-term operations 0, 5 -255 = Currently undefined.
The following four floating point values are in units of degrees. Off-Earth coordinates have a value of 999999.		
231–234	IFNW1	Current frame – Northwest corner latitude
235–238	IFNW2	Current frame – Northwest corner longitude
239–242	IFSE1	Current frame – Southeast corner latitude
243–246	IFSE2	Current frame – Southeast corner longitude
247	IG2TN	Second order gain interpolation table index number. Integer value of 1, 2, or 3 denoting which of the three possible tables is reported in IG2IT (see words 6779–7002).
248	ISCP2	Repeat of ISCP1 (see word 193)
249–250	ISCA2	Repeat of words 3-4 (part of ISCAN)
251-258	CIFST	Current Imager Frame Start Time. CDA time tag - 8 words formatted in same manner as defined for words 23-150.
259–277		Spares – not used
278	PXOR1	Longitudinal parity XOR of words 1–277
The following partition provides the Imager O&A parameters. The format and engineering units of each variable are denoted in parenthesis. The partition is sized to hold the largest expected O&A set. In general, the actual number of parameters in effect is less than the maximum and varies over time. The numeric parameters (words 535–538 and 659–662) are used to denote the number of active terms employed for the roll attitude angle. In a similar fashion, each of the remaining four angles modeled by the O&A set is provided with numeric parameters defining the number of active terms. Inactive terms are not compressed out of the O&A set; their places are occupied by zeroed data words.		
279-282	IMCID	IMC Identifier (4 ASCII characters)
283-294		Spares – not used
295–298	REFLO	Reference Longitude (positive East, R*4, radians)
299–302	REFRA	Reference radial distance from nominal (R*4, kilometers [km])
303–306	REFLA	Reference Latitude (positive North, R*4, radians)
307–310	REFOR	Reference Orbit Yaw (R*4, radians)
311–314	REROL	Reference Attitude: Roll (R*4, radians)
315–318	REPIT	Reference Attitude: Pitch (R*4, radians)
319–322	REYAW	Reference Attitude: Yaw (R*4, radians)
323–330	EPODT	Epoch Date or Time: Standard BCD time format

Word	Name	Description
331–334	IMCSET	IMC set enable time from epoch (R*4, minutes)
335–338	COROL	Spacecraft compensation: Roll (R*4, radians)
339–342	COPIT	Spacecraft compensation: Pitch (R*4, radians)
343–346	COYAW	Spacecraft compensation: Yaw (R*4, radians)
347–398	CHLON	Change in longitude from ref. (13 at R*4, radians)
399–442	CHRAD	Change in radial distance from ref. (11 at R*4, km)
443–478	SINLA	Sine geocentric latitude, total (9 at R*4, no units)
479–514	SIYAW	Sine orbit yaw, total (9 at R*4, no units)
515–518	DAYSO	Daily solar rate (R*4, radians per minute)
519–522	START	Exponential start time from epoch (R*4, minutes)
Words 523–742 apply to Roll attitude angle:		
523–526	EXMAGR	Exponential magnitude (R*4, radians)
527–530	EXTICR	Exponential time constant (R*4, minutes)
531–534	MATANR	Constant, mean attitude angle (R*4, radians)
535–538	SINANR	Number of sinusoids or Angles (I*4, none)
539–542	MAG1SR	Magnitude of first-order sinusoid (R*4, radians)
543–546	PA1SDR	Phase angle of first-order sinusoid (R*4, radians)
547–658	**	**Repeat 539–546 for 2nd – 15th sinusoids (R*4, radians) MAG#SR, where # = 2 - 9; MA##SR, where ## = 10 - 15 PA#SDR, where # = 2 - 9; PA##SR, where ## = 10 - 15
659–662	NUMMSR	Number of monomial sinusoids (I*4, no units)
663–666	OAPS1R	Order of applicable sinusoid (I*4, no units)
667-670	O1MSDR	Order of first monomial sinusoid (I*4, no units)
671-674	MMSD1R	Magnitude of monomial sinusoid (R*4, radians)
675-678	PAMS1R	Phase angle of monomial sinusoid (R*4, radians)
679–682	AEMZ1R	Angle from epoch where monomial is zero (R*4, radians)
683–702	**	**Repeat 663–682 for second monomial OAPS2R O2MSDR MMSD2R PAMS2R AEMZ2R
703–722	**	**Repeat 663–682 for third monomial OAPS3R O3MSDR MMSD3R PAMS3R AEMZ3R
723–742	**	**Repeat 663–682 for fourth monomial OAPS4R O4MSDR MMSD4R PAMS4R AEMZ4R

Word	Name	Description
743–962	**	**Repeat 523–742 for Pitch attitude angle EXMAGP EXTICP MATANP SINANP MAG#SP, where # = 1 - 9, MA##SP where ## = 10 - 15 PA#SDP, where # = 1 - 9, PA##SP where ## = 10 - 15 NUMMSP OAPS#P, where # = 1 - 4 O#MSDP, where # = 1- 4 MMSD#P, where # = 1 - 4 PAMS#P, where # = 1 - 4 AEMZ#P, where # = 1 – 4
963-1182	**	**Repeat 523–742 for Yaw attitude angle EXMAGY EXTICY MATANY SINANY MAG#SY, where # = 1 - 9, MA##SY where ## = 10 - 15 PA#SDY, where # = 1 - 9, PA##SY where ## = 10 - 15 NUMMSY OAPS#Y, where # = 1 - 4 O#MSDY, where # = 1- 4 MMSD#Y, where # = 1 - 4 PAMS#Y, where # = 1 - 4 AEMZ#Y, where # = 1 - 4
1183–1402	**	**Repeat 523–742 for Roll Misalignment angle EXMAGRM EXTICRM MATANRM SINANRM MAG#SRM where # = 1 - 9, MA##SRM where ## = 10 - 15 PA#SDRM, where # = 1 - 9, PA##SRM where ## = 10 - 15 NUMMSRM OAPS#RM, where # = 1 - 4 O#MSDRM, where # = 1- 4 MMSD#RM, where # = 1 - 4 PAMS#RM, where # = 1 - 4 AEMZ#RM, where # = 1 - 4
1403–1622	**	**Repeat 523–742 for Pitch Misalignment angle EXMAGPM EXTICPM MATANPM SINANPM MAG#SPM where # = 1 - 9, MA##SPM where ## = 10 - 15 PA#SDPM, where # = 1 - 9, PA##SPM where ## = 10 - 15 NUMMSPM OAPS#PM, where # = 1 - 4 O#MSDPM, where # = 1- 4 MMSD#PM, where # = 1 - 4 PAMS#PM, where # = 1 - 4 AEMZ#PM, where # = 1 - 4’
1623–1624	ISCA3	**Repeat of words 3-4 (part of ISCAN)
1625	ISCP3	**Repeat of ISCP1 (see word 193)
1626	PXOR2	Longitudinal parity (XOR) of words 279–1625

Word	Name	Description
The terms below are used to adjust the visible Imagery transmitted in GVAR so that it coregisters with the accompanying IR Imagery. If SPS co-registration is enabled, word 1679 has a non-zero index (1–48) indicating which visible correction terms (words 1631–1678 for pixels, 6235–6282 for lines) are being used. If SPS co-registration is disabled, word 1679 is zero.		
1627–1630	COTID	Co-registration Table ID (4 ASCII characters)
1631–1678	EWHCT*	(1 x 48) E-W half-hourly correction terms EWHCT_P0 - P47
1679	ICTCA	Index of correction terms currently active
1680–1690		Spares – not used
In the following, an abbreviated form of the raw header and trailer data blocks associated with the current scan are provided. The downlinked raw data has a 10-bit word length, with each block containing 48 words. The first two words of each block contain a synchronization code and a block ID not included here. Each 10-bit word is embedded in two sequential 8-bit words: First word bits 0–5: not used – zeros bits 6–7: two MSBs of 10-bit word Second word bits 0–7: eight LSBs of 10-bit word		
Specific definitions of the contents of the 10-bit raw data words can be acquired from the *Instrument to OGE Interface Specification*.		
1691–1782	CSRHB	Current scan raw header data block
1783–1874	CSRTB	Current scan raw trailer data block
1875–1966	LLSRH	Latest lagged scan raw header data block
1967–2058	LLSRT	Latest lagged scan raw trailer data block
The Imager telemetry raw data section which follows consists of 122 10-bit words, each 10-bit word formatted as described above. It contains a copy of each of the four command register status reports, as well as the 78 raw telemetry data words acquired from the most recent 39 telemetry blocks contained in a scan reversal sequence. The notation “B(MSB–LSB)” is used to indicate the bit position of the source data in the downlinked raw data block. Specific definitions of the contents of the status reports, as well as a listing of the telemetry points contained, can be found in reference document SJ-572022.		
2059–2080	B1CRR	Block 1 command register 1 report, B(20–129)
2081–2102	B2CRR	Block 2 command register 2 report, B(20–129)
2103–2124	B3CRR	Block 3 command register 3 report, B(20–129)
2125–2146	B4CRR	Block 4 command register 4 report, B(20–129)
2147–2148	B1TW1	Block 1, telemetry word 1, B(230–239)
2149–2150	B1TW2	Block 1, telemetry word 2, B(470–479)
2151–2302	**	**Repeat 2147–2150 for blocks 2 – 39 B#TW1 where # = 2 - 39 B#TW2, where # = 2 - 39
2303–2305		Spares – not used
2306	PXOR3	Longitudinal parity (XOR) of words 1627–2305
In the following partition, four arrays are used to provide up to 1024 grid points for the current output scan. The grid points represent two distinct databases.		
2307–2818	GD1DA	Grid (database 1) detector array
2819–3330	GD2DA	Grid (database 2) detector array
3331–4354	GD1PA	Grid (database 1) pixel array
4355–5378	GD2PA	Grid (database 2) pixel array

Word	Name	Description
Each of the GRID arrays above contain up to 512 entries. The number of entries varies for different output scans as a function of the number of grid points intersected by the scan. For any given scan, the current number of entries is indicated by words 185–188 (G1CNT, G2CNT). Each entry is defined using the formats shown below. A GRID POINT record consists of an entry from both the Detector and the PIXEL arrays. A Detector entry is an 8-bit (I*1) binary number denoting the logical visible detector which "saw" the grid coordinate. Corresponds to GVAR blocks by: = 1 for GVAR Block 3 = 2 for GVAR Block 4 = 3 for GVAR Block 5 = 4 for GVAR Block 6 = 5 for GVAR Block 7 = 6 for GVAR Block 8 = 7 for GVAR Block 9 = 8 for GVAR Block 10		
A pixel entry is a 16-bit (I*2) binary number which locates a virtual visible pixel in the Detector- denoted GVAR block. The located pixel corresponds to a particular GRID set coordinate. Values range from 0 for no pixel up to 25,092. A value of 1 indicates the first pixel in the associated GVAR block and 2 the second. The pixel value continues to rise in conjunction with the associated GVAR block.		
5379–5380	GS1RL	Grid Set No. 1 Revision level
5381–5382	GS2FL	Grid Set No. 2 Revision level
5383–5385		Spares – not used
5386	PXOR4	Longitudinal parity (XOR) of words 2307–5385
The following information is used to identify the oldest raw instrument scan that may be providing some of the detector data in the current output GVAR scan. Whether this information is required for the landmarking function is dependent upon the following three factors: 1. The current frame N-S scan direction. 2. The detector electronics side which is active. 3. The co-registration terms currently in use.		
The format of the header and trailer data is the same as described for words 1691–2058. The time code formats are the same as defined for words 23–150.		
5387–5478	OLSRH	Oldest lagged scan raw header data block
5479–5570	OLSRT	Oldest lagged scan raw trailer data block
5571–5578	TOHED	Time of oldest lagged header block
5579–5586	TOTRL	Time of oldest lagged trailer block
The IR calibration term arrays in words 5587–5698 below are all in Real*4 format. Each array is sized to hold one (1) term for each of the seven active physical IR detectors. The IWBIAS terms apply to the westernmost IR pixels in the GVAR data stream. The bias term for the Nth West-to-East pixel in the line can be computed using the bias-rate terms IBRATE as follows: BIAS(n) = IWBIAS + (*N* – 1) IBRATE Note that the first-order gain is computed by one of the modes 1-7 when MBCC is set off, and by one of the modes 8-14 when MBCC is set on. The MBCC indicator in words 503-516 (IR detectors 1-7) and words 7754-7755 (8th IR detector) of Table 3-30 indicates the MBCC status. When the indicator is 0, the MBCC is set off. When it is 1, the MBCC is set on, but the original, physical, slope is used. When it is 2, the MBCC is set on, and the slope computed by regression is used.		
5587–5614	IWBIAS*	(4 x 7) IR calibration bias term IWBIAS_P1 - P7 GOES O-P 8th IR det @ wd#6307
5615–5642	IGAIN1*	(4 x 7) IR calibration first-order gain IGAIN1_P1 - P7 GOES O-P 8th IR det @ wd#6311

Word	Name	Description
5643–5670	IGAIN2*	(4 x 7) IR calibration second-order gain IGAIN2_P1 - P7 GOES O-P 8th IR det @ wd#6315
5671–5698	IBRATE*	(4 x 7) IR calibration bias rate IBRATE_P1 - P7 GOES O-P 8th IR det @ wd#6319
5699–5706	WMIRPX	CDA TOD of westernmost IR pixel
Imager IR Clamped Bias Statistics		
5707–5714	CLBIDA	CDA TOD of clamped bias data
5715–5728	TOTSSC*	(2 x 7) Total sample size TOTSSC_P1 - P7 GOES O-P 8th IR det @ wd#6323
5729–5742	FILSSC*	(2 x 7) Filtered sample size FILSSC_P1 - P7 GOES O-P 8th IR det @ wd#6325
5743–5756	UFMNVCC*	(2 x 7) Unfiltered minimum value – counts UFMNVCC_P1 - P7 GOES O-P 8th IR det @ wd#6327
5757–5770	FIMNVCC*	(2 x 7) Filtered minimum value – counts FIMNVCC_P1 - P7 GOES O-P 8th IR det @ wd#6329
5771–5784	UFMXVCC*	(2 x 7) Unfiltered maximum value – counts UFMXVCC_P1 - P7 GOES O-P 8th IR det @ wd#6331
5785–5798	FIMXVCC*	(2 x 7) Filtered maximum value – counts FIMXVCC_P1 - P7 GOES O-P 8th IR det @ wd#6333
5799–5826	UFMEVCC*	(4 x 7) Unfiltered mean value – counts UFMEVCC_P1 - P7 GOES O-P 8th IR det @ wd#6335
5827–5854	FIMEVCC*	(4 x 7) Filtered mean value – counts FIMEVCC_P1 - P7 GOES O-P 8th IR det @ wd#6339
5855–5882	UFSDCC*	(4 x 7) Unfiltered standard deviation (σ) – counts USFDCC_P1 - P7 GOES O-P 8th IR det @ wd#6343
5883–5910	FISGCC*	(4 x 7) Filtered σ – counts FISGCC_P1 - P7 GOES O-P 8th IR det @ wd#6347
5911–5938	FISGRC*	(4 x 7) Filtered σ – radiance FISGRC_P1 - P7 GOES O-P 8th IR det @ wd#6351
5939–5966	FISGTC*	(4 x 7) Filtered σ – temperature FISGTC_P1 - P7 GOES O-P 8th IR det @ wd#6355
5967–5970	CMASFC*	Clamp mode and status flags Note: Status flags for 8th IR detector are in word 6363. CMASFC_P0 - P17 GOES O-P 8th IR det @ wd#6359

Word	Name	Description
Imager IR Drift Bias Statistics		
5971–5978	CDADBD	CDA TOD of drift bias data
5979–5992	TOTSSD*	(2 x 7) Total sample size TOTSSD_P1 - P7 GOES O-P 8th IR det @ wd#6363
5993–6006	FILSSD*	(2 x 7) Filtered sample size FILSSD_P1 - P7 GOES O-P 8th IR det @ wd#6365
6007–6020	UFMNVCD*	(2 x 7) Unfiltered minimum value – counts UFMNVCD_P1 - P7 GOES O-P 8th IR det @ wd#6367
6021–6034	FIMNVCD*	(2 x 7) Filtered minimum value – counts FIMNVCD_P1 - P7 GOES O-P 8th IR det @ wd#6369
6035–6048	UFMXVCD*	(2 x 7) Unfiltered maximum value – counts UFMXVCD_P1 - P7 GOES O-P 8th IR det @ wd#6371
6049–6062	FIMXVCD*	(2 x 7) Filtered maximum value – counts FIMXVCD_P1 - P7 GOES O-P 8th IR det @ wd#6373
6063–6090	UFMEVCD*	(4 x 7) Unfiltered mean value – counts UFMEVCD_P1 - P7 GOES O-P 8th IR det @ wd#6375
6091–6118	FIMEVCD*	(4 x 7) Filtered mean value – counts FIMEVCD_P1 - P7 GOES O-P 8th IR det @ wd#6379
6119–6146	UFSDCD*	(4 x 7) Unfiltered σ – counts UFSDCD_P1 - P7 GOES O-P 8th IR det @ wd#6383
6147–6174	FISGCD*	(4 x 7) Filtered σ – counts FISGCD_P1 - P7 GOES O-P 8th IR det @ wd#6387
6175–6202	FISGRD*	(4 x 7) Filtered σ – radiance FISGRD_P1 - P7 GOES O-P 8th IR det @ wd#6391
6203–6230	FISGTD*	(4 x 7) Filtered σ – temperature FISGTD_P1 - P7 GOES O-P 8th IR det @ wd#6395
6231–6234	CMASFD*	Clamp mode and status flags. Note: Status flags for 8th IR detector are in word 6403. CMASFD_P0 - P17 GOES O-P 8th IR det @ wd#6399
6235–6282	NSHCT*	(1 x 48) N-S half-hourly correction terms NSHCT_P0 - P47
6283–6286	SCCELO	(4 x 1) Scan Clamp E-W clipping edge limb offset
6287–6288	IMBOOST	When relativization is active, this is the amount of boost (the arbitrary count level of space)
6289	IRELON	Relativization indication, 1 indicates the function is active

Word	Name	Description
6290-6296	IMBCG1M*	Actual IR calibration first order gain mode (slope computation mode for each of 7 detectors) [1x7] Expected values: 1-14 IMBCG1M_P1 - P7 GOES O-P 8th IR det @ wd#6400
6297-6303		Spares – not used
6304	PXOR5	Longitudinal parity (XOR) of words 5387–6303

The co-registration 30 minute correction terms defined in words 1631–1678 and 6235–6282 are formed using 2s complement notation within the 8-bit fields. Valid ranges are –64 to +64 pixels for E-W terms and –8 to +8 lines for N-S terms.

The two clamp mode and status flag fields defined in words 5967–5970 and 6231–6234 are identically structured within the 32-bits allocated for each. The first word, 5967 and 6231, identifies the clamp mode active at the time the associated space data was acquired. It takes on one of the following values:

4 = scan clamp mode active
2 = 9.2-second space clamp mode active
1 = 36.6-second space clamp mode active
0 = mode unknown

The remaining 24-bits, words 5968–5970 and 6232–6234, are used to flag status and alarm conditions associated with the data. These bits are identified as bits 0–23, where the MSB (bit 0) is the left-most bit of the first word (5968, 6232). The bits are set to one if the associated condition is true. They are reset to zero if the condition is false. The bits assignments are as follows:

Bit	Detector GOES I-L	Detector GOES M-N	True Condition
00			Unassigned (always zero)
01	4/1	2/1	invalid calibration condition (no statistics)
02	4/2	2/2	invalid calibration condition (no statistics)
03	5/1	3/1	invalid calibration condition (no statistics)
04	5/2	3/2	invalid calibration condition (no statistics)
05	2/1	4/1	invalid calibration condition (no statistics)
06	2/2	4/2	invalid calibration condition (no statistics)
07	3/1	6/1	invalid calibration condition (no statistics)
08			Unassigned (always zero)
09	4/1	2/1	excessive drift rate alarm
10	4/2	2/2	excessive drift rate alarm
11	5/1	3/1	excessive drift rate alarm
12	5/2	3/2	excessive drift rate alarm
13	2/1	4/1	excessive drift rate alarm
14	2/2	4/2	excessive drift rate alarm
15	3/1	6/1	excessive drift rate alarm
16–20			Unassigned (always zero)
21			Space clamp side active (1–East)
22			Excessive interpolation interval
23			Atmospheric exclusion zone activated

Note that for GOES O-P, there is an 8th detector, and the flags for the 8th detector are at words 6359 (corresponding to 5968-5970) and 6399 (corresponding to 6232-6234). Refer to Table 3-6, Table 3-7, and Table 3-8.

Table 3-7. Imager Documentation Block 0 (Words 6305-8040) (GOES I-N) Format Definition

Word	Name	Description
In the remaining partition, coefficients and parameters that were measured prior to launch (factory values) are provided. For the most part, these values serve as a historical reference to be used in evaluating the current condition of the imaging detectors. In a few instances, the values are used throughout the life of the instrument as part of the normal calibration functions. The nadir location of the instrument is measured in terms of cycles and increments in the N-S and E-W directions (see Section 3.4). Cycles are expressed as an 8-bit integer number ranging from 0 to 127. Increments are expressed as a 16-bit integer number ranging from 0 to 6135.		
6305	IOFNC	Instrument nadir, N-S cycles
6306	IOFEC	Instrument nadir, E-W cycles
6307–6308	IOFNI	Instrument nadir, N-S increments
6309–6310	IOFEI	Instrument nadir, E-W increments
For each of the 22 detectors (8 visible, 14 IR), two 16-bit integer values provide the X (E-W) and the Y (N-S) µradian offset of the detector centroid from the instrument's optical axis, as follows:		
6311–6354	VD#XO PI#XO RI#XO	Repeat for 2 detectors as follows: Detector X-Offsets where # = Visual detectors 1 - 8 Primary IR detectors 1 - 7 Redundant IR detectors 1 – 7
6355–6398	VD#YO PI#YO RI#YO	Repeat for 2 detectors as follows: Detector Y-Offsets where # = Visual detectors 1 - 8 Primary IR detectors 1 - 7 Redundant IR detectors 1 - 7
A set of characteristic response coefficients is provided for each of the 22 Imager detectors. The characteristic response coefficients are the initial calibration coefficients associated with the detectors. The scaling factors are used to generate a 10-bit value from each calibrated IR pixel. All entries are single precision floating point numbers. Each of the following arrays contains eight elements, one element per visible detector. The elements are ordered within each array in increasing physical detector number, with element 1 assigned to physical visible detector 1. This pattern continues for all the elements within each array.		
6399–6430	IVCRB*	Visible detectors characteristic response bias coefficients array. IVCRB_P0 - P7
6431–6462	IVCR1*	Visible detectors characteristic response first-order gain coefficients array. IVCR1_P0 - P7
6463–6494	IVCR2*	Visible detector characteristic response second-order gain coefficients array. IVCR2_P0 - P7
6495–6498	IVRAL	Visible detectors radiance-to-albedo conversion factor, one value for all eight detectors.

Word	Name	Description
In the following arrays the first five each contain 14 elements, one element per IR detector. The first seven elements in each array apply to the seven side 1 (primary) detectors; the last seven, to the side 2 (redundant) detectors. Within each group of seven, the elements are ordered in the same 1–7 sense as follows: **For GOES I-L:** 1 – channel 4 North 2 – channel 4 South 3 – channel 5 North 4 – channel 5 South 5 – channel 2 North 6 – channel 2 South 7 – channel 3 **For GOES M-N:** 1 – channel 2 North 2 – channel 2 South 3 – channel 3 North 4 – channel 3 South 5 – channel 4 North 6 – channel 4 South 7 – channel 6		
6499–6554	IICRB*	Characteristic response bias coefficients IICRB_P0 - P13
6555–6610	IICR1*	Characteristic response first-order gain coefficients IICR1_P0 - P13
6611–6666	IICR2*	Characteristic response second-order gain coefficients IICR2_P0 - P13
6667–6722	IISFB*	Scale factors bias coefficients IISFB_P0 - P13
6723–6778	IISF1*	Scale factors first-order gain coefficients IISF1_P0 - P13
6779–7002	IG2IT*	Second gain interpolation table. This array contains 56 elements, 4 elements for each of the 14 IR detectors. The first 28 elements apply to the side 1 detectors, the last 28 to side 2. Within each group of 28, the elements are sequentially ordered (in groups of four) in the same 1–7 sense defined previously. IG2IT_P0 - P55
7003–7018	IG2BP*	Second gain baseplate temperature interpolation pivot points. Four baseplate temperatures at which IG2IT gains were measured. Access this table with baseplate temperature to determine linear interpolation factors to use within IG2IT. IG2BP_P0 - P3
7019–7242	IBBTR*	BB temperature-to-target radiance conversion coefficients. An array of 56 elements, 4 elements for each of the 14 IR detectors. Elements are ordered in the same manner as described for IG2IT. IBBTR_P0 - P55
7243–7266	IPRNG*	Patch temperature control ranges. An array of six elements, two elements for each of the three patch temperature control ranges. Each pair of elements defines the lower and upper temperature limit assigned to a patch control point. IPRNG_P0 - P5
7267-7270	XGOHI_ON	Resampling status word <BIT 1,1> Resampling effective on/off stored in one bit <BIT 2,1> Resampling commanded on/off (not GSU unique). <BIT 3,6> Resampling kernel suite ID.

Word	Name	Description
7271-7302	XGOHI_P0 XGOHI_P1 XGOHI_P2 XGOHI_P3 XGOHI_P4 XGOHI_Q0 XGOHI_Q1 XGOHI_Q2	Time-tag correction coefficients • Frame corners and frame time tag are the same in space and as resampled per the current GSU design. • Time-tag coefficient added one parameter for denominator of rational polynomial function (lead coefficient is no longer assumed 1). All time coefficients in 'F4' format, (i.e.,4 byte IEEE floating point)
7307-7318	(Reserved)	Spacelook scheduling (Spacelook documentation under reconsideration)
7307–7366		Spares – not used
In the following section, conversion coefficients are provided for each telemetry point whose engineering units value is used for calibration or alarm monitoring functions by the SPS. Conversion factors of unused telemetry points may be acquired from reference document SJ-572022.		
7367–7370	IEL1A	Imager Electronics Temperature side No. 1 coefficients. Final letter of term name (A–F) denotes type. See Eq 3.6-5 and 3.6-6 for usage.
7371–7374	IEL1B	Imager Electronics Temperature side No. 1 coefficients.
7375–7378	IEL1C	Imager Electronics Temperature side No. 1 coefficients.
7379–7382	IEL1D	Imager Electronics Temperature side No. 1 coefficients.
7383–7386	IEL1E	Imager Electronics Temperature side No. 1 coefficients.
7387–7390	IEL1F	Imager Electronics Temperature side No. 1 coefficients.
The A–F naming convention used above with IEL1_ is also used for the following thermistor terms:		
7391–7414	IEL2*	Electronics No. 2 thermistor terms IEL2A - 2F
7415–7438	IBP1*	Baseplate thermistor No. 1 terms IBP1A - 1F
7439–7462	IBP2*	Baseplate thermistor No. 2 terms IBP2A - 2F
7463–7486	IBP3*	Baseplate thermistor No. 3 terms IBP3A - 3F
7487–7510	IBP4*	Baseplate thermistor No. 4 terms IBP4A - 4F
7511–7534	IBP5*	Baseplate thermistor No. 5 terms IBP5A - 5F
7535–7558	IBP6*	Baseplate thermistor No. 6 terms IBP6A - 6F
7559–7582	IBB1*	BB thermistor No. 1 terms IBB1A - 1F
7583–7606	IBB2*	BB thermistor No. 2 terms IBB2A - 2F
7607–7630	IBB3*	BB thermistor No. 3 terms IBB3A - 3F
7631–7654	IBB4*	BB thermistor No. 4 terms IBB4A - 4F
7655–7678	IBB5*	BB thermistor No. 5 terms IBB5A - 5F
7679–7702	IBB6*	BB thermistor No. 6 terms IBB6A - 6F

Word	Name	Description
7703–7726	IBB7*	BB thermistor No. 7 terms IBB7A - 7F
7727–7750	IBB8*	BB thermistor No. 8 terms IBB8A - 8F
7751–7774	IOP1*	Scan mirror thermistor terms IOP1_A - F
7775–7798	IOP2*	Primary mirror thermistor terms IOP2_A - F
7799–7822	IOP3*	Secondary mirror thermistor No. 1 terms IOP3_A - F
7823–7846	IOP4*	Secondary mirror thermistor No. 2 terms IOP4_A - F
7847–7870	IOP5*	Baffle thermistor No. 1 terms IOP5_A - F
7871–7894	IOP6*	Baffle thermistor No. 2 terms IOP6_A - F
7895–7918	IOP7*	Aft optics thermistor terms IOP7_A - F
The next four telemetry points use the following mapping to convert raw counts to engineering units: Temp = A + BX + CX^2 + DX^3. The last two terms (E-F) are set equal to zero.		
7919–7942	IOP8*	Cooler radiator PRT terms IOP8_A - F
7943–7966	IOP9*	Wide range IR detector PRT terms IOP9_A - F
7967–7990	IOPA*	Narrow range IR detector PRT terms IOPAA - F
7991–8014	ICHT*	Cooler housing PRT terms ICHTA - F
The remaining two telemetry points use a simple linear, gain and bias, mapping to convert raw counts to engineering units.		
8015–8022	IPVGB*	Patch control voltage gain or bias terms IPVGB_P0 – P1
8023–8030	IICGB*	Instrument current gain or bias terms IICGB_P0 - P1
8031–8039		Spares – not used
8040	PXOR6	Longitudinal parity (XOR) of words 6305–8039

Table 3-8. Imager Documentation Block 0 (Words 6305-8040) (GOES-O and Beyond) Format Definition

Word	Name	Description
6305-6305	ISCAN8	Status of IR detector 8. A set bit indicates the associated detector data is invalid. GOES I-N IR dets 1-7 @ wd#3-6 bits 17-23
6306-6306	IDSUB8	Substitution indicator for IR detector 8. A non-zero value indicates the detector 8 data in Blocks 1 – 10 is substituted data acquired from the detector whose number is entered. GOES I-N IR dets 1-7 @ wd#7-22
IR Calibration Bias Terms for 8th IR detector (see words 5587-5698 for IR detectors 1-7)		
6307-6310	IWBIAS_P8	(4 x 1) IR calibration bias term. GOES I-N IR dets 1-7 @ wd#5587
6311-6314	IGAIN1_P8	(4 x 1) IR calibration first-order gain. GOES I-N IR dets 1-7 @ wd#5615
6315-6318	IGAIN2_P8	(4 x 1) IR calibration second-order gain. GOES I-N IR dets 1-7 @ wd#5643
6319-6322	IBRATE_P8	(4 x 1) IR calibration bias rate. GOES I-N IR dets 1-7 @ wd#5671
Imager IR Clamped Bias Statistics for 8th IR detector (see words 5715-5970 for IR detectors 1-7)		
6323-6324	TOTSSC_P8	(2 x 1) Total sample size. GOES I-N IR dets 1-7 @ wd#5715
6325-6326	FILSSC_P8	(2 x 1) Filtered sample size. GOES I-N IR dets 1-7 @ wd#5729
6327-6328	UFMNVCC_P8	(2 x 1) Unfiltered minimum value – counts. GOES I-N IR dets 1-7 @ wd#5743
6329-6330	FIMNVCC_P8	(2 x 1) Filtered minimum value – counts. GOES I-N IR dets 1-7 @ wd#5757
6331-6332	UFMXVCC_P8	(2 x 1) Unfiltered maximum value – counts. GOES I-N IR dets 1-7 @ wd#5771
6333-6334	FIMXVCC_P8	(2 x 1) Filtered maximum value – counts. GOES I-N IR dets 1-7 @ wd#5785
6335-6338	UFMEVCC_P8	(4 x 1) Unfiltered mean value – counts. GOES I-N IR dets 1-7 @ wd#5799
6339-6342	FIMEVCC_P8	(4 x 1) Filtered mean value – counts. GOES I-N IR dets 1-7 @ wd#5827
6343-6346	UFSDCC_P8	(4 x 1) Unfiltered standard deviation (σ) – counts. GOES I-N IR dets 1-7 @ wd#5855
6347-6350	FISGCC_P8	(4 x 1) Filtered σ – counts. GOES I-N IR dets 1-7 @ wd#5883
6351-6354	FISGRC_P8	(4 x 1) Filtered σ – radiance. GOES I-N IR dets 1-7 @ wd#5911
6355-6358	FISGTC_P8	(4 x 1) Filtered σ – temperature. GOES I-N IR dets 1-7 @ wd#5939
6359-6359	CMASFC*	Clamp Status Flags for 8th IR detector. GOES I-N IR dets 1-7 @ wd#5967 CMASFC_P18 - P19 Flags for other detectors are in words 5968-5970. Meaning of flags is as follows: **Bit** **True Condition** 00 Unassigned (always zero) 01 invalid calibration condition for 8th IR detector (channel 6 det 2) (no statistics) 02 excessive drift rate alarm for 8th IR detector (channel 6 det 2) 03-07 Unassigned (always zero)
6360-6362		SPARE
Imager IR Drift Bias Statistics for 8th IR detector (see words 5979-6234 for IR detectors 1-7)		
6363-6364	TOTSSD_P8	(2 x 1) Total sample size. GOES I-N IR dets 1-7 wd#5979
6365-6366	FILSSD_P8	(2 x 1) Filtered sample size. GOES I-N IR dets 1-7 wd#5993
6367-6368	UFMNVCD_P8	(2 x 1) Unfiltered minimum value – counts. GOES I-N IR dets 1-7 wd#6007
6369-6370	FIMNVCD_P8	(2 x 1) Filtered minimum value – counts. GOES I-N IR dets 1-7 wd#6021
6371-6372	UFMXVCD_P8	(2 x 1) Unfiltered maximum value – counts. GOES I-N IR dets 1-7 wd#6035
6373-6374	FIMXVCD_P8	(2 x 1) Filtered maximum value – counts. GOES I-N IR dets 1-7 wd#6049
6375-6378	UFMEVCD_P8	(4 x 1) Unfiltered mean value – counts. GOES I-N IR dets 1-7 wd#6063

Word	Name	Description
6379-6382	FIMEVCD_P8	(4 x 1) Filtered mean value – counts. GOES I-N IR dets 1-7 wd#6091
6383-6386	UFSDCD_P8	(4 x 1) Unfiltered standard deviation (σ) – counts. GOES I-N IR dets 1-7 wd#6119
6387-6390	FISGCD_P8	(4 x 1) Filtered σ – counts. GOES I-N IR dets 1-7 wd#6147
6391-6394	FISGRD_P8	(4 x 1) Filtered σ – radiance. GOES I-N IR dets 1-7 wd#6175
6395-6398	FISGTD_P8	(4 x 1) Filtered σ – temperature. GOES I-N IR dets 1-7 wd#6203
6399-6399	CMASFD*	Clamp Status Flags for 8th IR detector. GOES I-N IR dets 1-7 wd#6231 CMASFD_P18 – P19 Flags for other detectors are in words 5968-5970. Meaning of flags is as follows: **Bit** **True Condition** 00 Unassigned (always zero) 01 invalid calibration condition for 8th IR detector (channel 6 det 2) (no statistics) 02 excessive drift rate alarm for 8th IR detector (channel 6 det 2) 03-07 Unassigned (always zero)
6400-6400	IMBCG1M_P8	Actual IR calibration first order gain mode for the 8th IR detector. For other IR detectors, see words 6290-6296.
6401-7932		SPARE
Imager detector offsets and nadir positions		
7933-7934	F_VD1XO	Visible detector 1 x-offsets
7935-7936	F_VD2XO	Visible detector 2 x-offsets
7937-7938	F_VD3XO	Visible detector 3 x-offsets
7939-7940	F_VD4XO	Visible detector 4 x-offsets
7941-7942	F_VD5XO	Visible detector 5 x-offsets
7943-7944	F_VD6XO	Visible detector 6 x-offsets
7945-7946	F_VD7XO	Visible detector 7 x-offsets
7947-7948	F_VD8XO	Visible detector 8 x-offsets
7949-7950	F_PI1XO	Infrared detector 1 x-offsets
7951-7952	F_PI2XO	Infrared detector 2 x-offsets
7953-7954	F_PI3XO	Infrared detector 3 x-offsets
7955-7956	F_PI4XO	Infrared detector 4 x-offsets
7957-7958	F_PI5XO	Infrared detector 5 x-offsets
7959-7960	F_PI6XO	Infrared detector 6 x-offsets
7961-7962	F_PI7XO	Infrared detector 7 x-offsets
7963-7964	F_PI8XO	Infrared detector 8 x-offsets
7965-7966	F_RI1XO	Redundant infrared detector 1 x-offsets
7967-7968	F_RI2XO	Redundant infrared detector 2 x-offsets
7969-7970	F_RI3XO	Redundant infrared detector 3 x-offsets
7971-7972	F_RI4XO	Redundant infrared detector 4 x-offsets
7973-7974	F_RI5XO	Redundant infrared detector 5 x-offsets
7975-7976	F_RI6XO	Redundant infrared detector 6 x-offsets
7977-7978	F_RI7XO	Redundant infrared detector 7 x-offsets
7979-7980	F_RI8XO	Redundant infrared detector 8 x-offsets
7981-7982	F_VD1YO	Visible detector 1 y-offsets
7983-7984	F_VD2YO	Visible detector 2 y-offsets
7985-7986	F_VD3YO	Visible detector 3 y-offsets

Word	Name	Description
7987-7988	F_VD4YO	Visible detector 4 y-offsets
7989-7990	F_VD5YO	Visible detector 5 y-offsets
7991-7992	F_VD6YO	Visible detector 6 y-offsets
7993-7994	F_VD7YO	Visible detector 7 y-offsets
7995-7996	F_VD8YO	Visible detector 8 y-offsets
7997-7998	F_PI1YO	Infrared detector 1 y-offsets
7999-8000	F_PI2YO	Infrared detector 2 y-offsets
8001-8002	F_PI3YO	Infrared detector 3 y-offsets
8003-8004	F_PI4YO	Infrared detector 4 y-offsets
8005-8006	F_PI5YO	Infrared detector 5 y-offsets
8007-8008	F_PI6YO	Infrared detector 6 y-offsets
8009-8010	F_PI7YO	Infrared detector 7 y-offsets
8011-8012	F_PI8YO	Infrared detector 8 y-offsets
8013-8014	F_RI1YO	Redundant infrared detector 1 y-offsets
8015-8016	F_RI2YO	Redundant infrared detector 2 y-offsets
8017-8018	F_RI3YO	Redundant infrared detector 3 y-offsets
8019-8020	F_RI4YO	Redundant infrared detector 4 y-offsets
8021-8022	F_RI5YO	Redundant infrared detector 5 y-offsets
8023-8024	F_RI6YO	Redundant infrared detector 6 y-offsets
8025-8026	F_RI7YO	Redundant infrared detector 7 y-offsets
8027-8028	F_RI8YO	Redundant infrared detector 8 y-offsets
8029-8032		SPARE
8033-8033	F_IOFNC	Instrument Nadir, North/South cycles
8034-8034	F_IOFEC	Instrument Nadir, East/West cycles
8035-8036	F_IOFNI	Instrument Nadir, North/South increments
8037-8038	F_IOFEI	Instrument Nadir, East/West increments

	IR CHANNEL (GOES I-L)	IR CHANNEL (GOES M-N)	NORMAL MODE		YAW-FLIPPED MODE	
			DETECTOR	SPS IR	DETECTOR	SPS IR
GVAR Block 1 has 4 IR Records	4	2	1	1	2	2
	4	2	2	2	1	1
	5	3	1	3	2	4
	5	3	2	4	1	3
GVAR Block 2 has 3 IR Records	2	4	1	5	2	6
	2	4	2	6	1	5
	3	6		7		7
Imager IR Detector Record Layout in Bits	LINE DOCUMENTATION – 160 BITS					
	Detector Data – from 10 Bits to 52,360 Bits					

Figure 3-15. Imager IR Detector Data Order in GVAR (GOES I-N)

	IR CHANNEL (GOES O-P)	NORMAL MODE		YAW-FLIPPED MODE	
		DETECTOR	SPS IR	DETECTOR	SPS IR
GVAR Block 1 has 4 IR Records	2	1	1	2	2
	2	2	2	1	1
	3	1	3	2	4
	3	2	4	1	3
GVAR Block 2 has 4 IR Records	4	1	5	2	6
	4	2	6	1	5
	6	1	7	2	8
	6	2	8	1	7

Imager IR Detector Record Layout in Bits	LINE DOCUMENTATION – 160 BITS
	Detector Data – from 10 Bits to 52,360 Bits

Figure 3-16. Imager IR Detector Data Order in GVAR (GOES-O and Beyond)

3.3.5.1 Line Documentation

The line documentation segment is used to uniquely identify the detector data segment through the use of a scan line sequence counter, spacecraft code, and detector ID information. A line documentation segment is 160-bits in length, consisting of 16 10-bit words.

3.3.5.2 IR Detector Data

The IR detector data segment contains the scan line data for the associated detector. This segment varies in length directly with the scan line, reaching a maximum nominal length of 52,360-bits, 5236 pixels, for a 19.2° wide scan. A worst case maximum length of 62,730-bits occurs if the full 23° wide FOV of the instrument is scanned. Data within this segment is always ordered from West-to-East, regardless of the original scan line direction. Each 10-bit pixel within this segment is formatted with the MSB first.

3.3.6 Blocks 3–10 Imager Visible Data

Image data from the Imager's eight visible detectors is carried in the data section fields of GVAR Blocks 3 – 10, one detector per block. Each of the GVAR Blocks 3 – 10 is assigned to a specific logical detector as illustrated in Figure 3-17. This assignment causes the northernmost pixel data to always occur in Block 3 and the southernmost pixel data to be in Block 10. The remaining pixel information is distributed in a North-to-South order across Blocks 4 – 9.

Figure 3-17 also illustrates the relationship between physical visible detectors and logical visible detectors for the normal and yaw-flipped spacecraft modes. This relationship is the same for both primary (side 1) and redundant (side 2) detector configurations. Note that this mapping of physical to logical detector only holds if the co-registration N-S offset in use is zero. For any active non-zero offset, the northernmost logical detector in Block 3 will be represented by a physical detector other than five. Note that this will also be the case for inverted spacecraft. Which physical detector represents the northernmost detector in an output scan is defined in word 184 of the associated Block 0.

Visible detector data is packaged using the same two-partition record format employed for the IR detector data. The first partition provides line documentation, and the second contains the detector data.

	GVAR BLOCK	NORMAL MODE DETECTOR		YAW-FLIPPED MODE DETECTOR	
		LOGICAL	PHYSICAL	LOGICAL	PHYSICAL
Each Imager Visible Detector Record Occupies One GVAR Block	3	1	5	1	4
	4	2	6	2	3
	5	3	7	3	2
	6	4	8	4	1
	7	5	1	5	8
	8	6	2	6	7
	9	7	3	7	6
	10	8	4	8	5
Imager Visible Detector Record Layout in Bits	LINE DOCUMENTATION – 160 BITS				
	Detector Data – from 40 Bits to 209,440 Bits				

Figure 3-17. Imager Visible Detector Logical Versus Physical Ordering

3.3.6.1 Line Documentation

The line documentation segment is used to uniquely identify the detector data segment through the use of a scan line sequence counter, spacecraft code, and detector ID information. A line documentation segment is 160-bits in length, consisting of 16 10-bit words. Table 3-9 defines the line documentation segment contents.

Table 3-9. Blocks 1–10 Line Documentation Definition

Word	Name	Description
1	SPCID	Spacecraft ID – a binary number identifying the source satellite as follows: 8 = GOES-I 9 = GOES-J 10 = GOES-K 11 = GOES-L 12 = GOES-M 13 = GOES-N 14 = GOES-O 15 = GOES-P
2	SPSID	SPS ID – a binary number identifying the source SPS, which formats the GVAR stream. Values 1 to 9 denote SPS1 to SPS9, respectively.
3	LSIDE	A binary number denoting the current active detector configuration. A value of 0 indicates side 1 is active; a value of 1023 indicates side 2 is active.
4	LIDET	A binary number denoting the physical detector identified as the data source. Values range from 1 – 8 for the visible channel and from 1 – 8 for the IR channels (see Figure 3-15 and Figure 3-16).
5	LICHA	A binary number identifying the source channel. Values range from 1 – 6, as follows: **Value** **ChannelWavelength** 1 01 visible 2 02 3.9 microns 3 03 6.75 or 6.5 microns 4 04 10.7 microns 5 05 12.0 microns 6 06 13.3 microns No imager will have both channels 5 and 6. Those on GOES-I through GOES-L have channel 5. Those on GOES-M through P will have channel 6.
6–7	RISCT	A binary number ranging from 1 – 1974 denoting the relative output scan count since the start of the imaging frame.
8	L1SCAN*	Imager scan status word 1: Bits 0–3 are not used. Bits 4–9 are duplicates of bits 2–7 of the ISCAN field and are defined in Table 3-6.
9	L2SCAN*	Imager scan status word 2: Bits 0–1 are not used. Bits 2–9 are duplicates of bits 8–15 of the ISCAN field and are defined in Table 3-6.
10–11	LPIXLS	A binary number denoting the number of pixels contained in the detector data record.

Word	Name	Description
12-13	LWORDS	A binary number denoting the number of words contained in the detector record, from word 1 of the line documentation to the last word in the detector data partition. This number, minus the 16 words of line documentation and the number of pixels contained in the detector data partition (see words 10–11), denotes the number of zero-valued words appended to the record for packing purposes. The packing is performed for the following three reasons: 1. To ensure consistent record bounding for the multi-record GVAR Blocks 1 and 2. 2. To ensure the overall length of the GVAR block information field is a multiple of 16-bits, permitting the proper computation of the block CRC. 3. To ensure the minimum GVAR block size of 32,208-bits is satisfied.
14	LZCOR	An 8-bit binary number denoting the value of the zonal correction (pixel offset) employed at the western edge of the scan line.
15	LLAG	A binary number (0, 1, or 2) denoting which scan (current, latest lagged, or oldest lagged, respectively) the detector data was acquired from. This information can be used to access Block 0 documentation associated with a particular scan, such as the associated header time tags (TCHED, TLHED, or TOHED, respectively).
16	SPARE	Spare–not used

3.3.6.2 Visible Detector Data

The visible detector data segment contains the normalized scan line data for the associated detector. This segment varies in length directly with the scan line, reaching a maximum nominal length of 209,440-bits, 20,944 pixels, for a 19.2° wide scan. A worst case maximum length of 250,920-bits occurs if the full 23° wide FOV of the instrument is scanned. Data within this segment is always ordered from West-to-East, regardless of the original scan line direction. Note that each 10-bit pixel within the segment is ordered with the MSB first.

3.3.7 Block 11 – Sounder and Auxiliary Data

The GVAR Sounder/Auxiliary Data (SAD) Block 11 is a fixed-length block equal in size to the Imager documentation Block 0. The internal structure of a SAD Block 11 depends upon the type of data being transported. The permissible SAD Block data types are as follows:

a. Sounder Documentation Data
b. Sounder Scan Data
c. Instrument Compensation Terms
d. Instrument Spacelook Calibration Data
e. Instrument BB-Cal Data
f. Instrument ECAL Data
g. Instrument Telemetry Statistics
h. Instrument Calibration Coefficients
i. Instrument NLUT
j. Instrument Star Sense Data
k. GIMTACS or SPS Text Messages
l. Imager Factory Coefficients
m. Fill Data.

The following is a layout of the 75,088-bit SAD Block 11s:

Field	Length
P/N Synch code	10032
Header	720
Data Section	64320
CRC	16

The P/N Synch code, Header, and CRC are described in Sections 3.3.1, 3.3.2, and 3.3.3, respectively.

The 64,320-bit data section is partitioned into two, fixed-length regions. The first region is 240-bits in length and called the SAD Block Identifier (SAD ID). The second region is 64,080-bits in length and defined in accordance with the type of data being transported. The word size employed in the data section also depends on the type of data being transported. Word sizes of 6, 8, and 10-bits are permitted.

The number of words for each of the two regions for the various word sizes are as follows:

Word Size (Bits)	Region 1 (Number of Words)	Region 2
6	40	10680
8	30	8010
10	24	6408

3.3.7.1 SAD ID

The 240-bit SAD ID provides a simple means of identifying which type of data is contained within the block. It also provides a data segmentation mechanism permitting transport of strings whose length exceeds the capacity of a single block.

The first nine words, seven fields, in a SAD ID are always defined in the same fashion regardless of the data type or word length. They are defined in terms of six-bit fields, right-adjusted and bounded within 6-, 8-, or 10-bit words. This ensures compatibility with the three word sizes supported by the Block 11 format. These fields, defined in Table 3-10 and illustrated in Figure 3-18, identify the particular data types contained within the block. The fields also provide a linkage mechanism for multi-block sequences. Table 3-11 defines the additional fields used to support text messages.

Table 3-10. SAD Block 11 Identifier

Words	Name	Description
1	SAD_SCID_*	Spacecraft Identity: a binary number identifying the source satellite as follows: 8 = GOES-I 9 = GOES-J 10 = GOES-K 11 = GOES-L 12 = GOES-M 13 = GOES-N 14 = GOES-O 15 = GOES-P
2	SAD_SPSID_*	SPS ID a binary number identifying the source SPS which formatted the GVAR data stream. Values 1 – 9 are assigned to SPS1 to SPS9, respectively.
3	SAD_DATAID_*	Data Identity – a binary number denoting the SAD block type as follows[#]: x '01' = 01 Fill data x '07' = 07 Imager compensation terms x '0E' = 14 Sounder compensation terms x '15' = 21 Imager telemetry statistics x '16' = 22 Imager spacelook data x '19' = 25 Imager calibration coefficients and limits x '1A' = 26 Imager ECAL data x '1C' = 28 Imager BB data x '1F' = 31 Imager NLUTs data x '20' = 32 Sounder documentation data x '23' = 35 Sounder scan data x '25' = 37 Sounder telemetry statistics x '26' = 38 Sounder spacelook data x '29' = 41 Sounder calibration Coefficients and limits x '2A' = 42 Sounder ECAL data x '2C' = 44 Sounder BB data x '2F' = 47 Sounder NLUTs data x '31' = 49 Imager Factory Coefficients x '32' = 50 GIMTACS text message x '34' = 52 SPS text message x '38' = 56 Reserved x '3B' = 59 Imager star sense data x '3D' = 61 Sounder star sense data
4	SAD_FIRSTBLOCK_*	First Block Flag – a 6-bit flag set to 63 (x '3F') if the SAD Block is the first of a series. Otherwise, the value is set to 0.[†]
5	SAD_LASTBLOCK_*	Last Block Flag – a 6-bit flag set to 63 (x '3F') if the SAD Block 11 is the last of a series. Otherwise, the value is set to 0.[†]
6-8	SAD_BLOCKCOUNT_*	Block Count – an 18-bit binary number representing the number of blocks within a sequence of blocks. Starts as 1 when First Block Flag is set and increments for each block after until Last Block Flag is set.
9	SAD_RECORDCOUNT_*	RECORD COUNT – a 6-bit binary count of records in block; 0 to 63 corresponding to 1 to 64 records. Set to 63 (x '3F') for fill data.
10–20	***	***Used to support text messages. Refer to Table 3-11.
21	SAD_YAW_FLIP_*	YAW-FLIP FLAG – a 6-bit flag set to 63 (x '3F') if the satellite is currently yaw-flipped. Otherwise, the value is reset to 0.
22–N	SAD_SPARES_*	Spare – not used**

WORDS	BITS										
					0	1	2	3	4	5	6-Bit Words
			0	1	2	3	4	5	6	7	8-Bit Words
	0	1	2	3	4	5	6	7	8	9	10-Bit Words
01	x	x	x	x	S/C IDENTITY						Words 1–9 and 21–N are always defined
02	x	x	x	x	SPS IDENTITY						the same way regardless of the
03	x	x	x	x	DATA IDENTITY						SAD Block 11 data type or word length:
04	x	x	x	x	FIRST BLOCK FLAG						6-bit, right-adjusted fields.
05	x	x	x	x	LAST BLOCK FLAG						Table 3-10 provides the definitions
06	x	x	x	x	BLOCK						(x = bit not used)
07	x	x	x	x							(b = bit field open)
08	x	x	x	x	COUNT						
09	x	x	x	x	RECORD COUNT						
10											Words 10–20 are defined according
•											to the application.
•											provides the definitions.
20											
21	x	x	x	x	YAW-FLIP FLAG						
22	x	x	x	x	Spare–not used.						
23	x	x	x	x	Spare–not used.						SAD ID has:
24	b	b	b	b	b	b	b	b	b	b	24 ten-bit words
25			b	b	b	b	b	b	b	b	
•											
30			b	b	b	b	b	b	b	b	or 30 eight-bit words
31					b	b	b	b	b	b	
•											
40					b	b	b	b	b	b	or 40 six-bit words

Notes:

The numbers used in word 3 ensure that single-bit transmission errors do not result in misidentification of the data in the block.

† If a complete sequence of data is contained in a single SAD Block, both the FIRST and LAST BLOCK FLAGs are set to 63, x '3F'.

** N = 40, 30, or 24 for 6-, 8-, or 10-bit word sizes, respectively.

Figure 3-18. SAD Block 11 Identifier

Table 3-11. SAD ID Text Messge Block 11

Words	Name	Description
10	NA	Source ID -- an 8-bit binary number denoting the following message originator. See Note 3, Figure 4-8.
11-12	NA	Number of Words -- a 16-bit count of the number of characters in the data section that follows.
13-20	NA	Time Queued -- a 64-bit BCD-encoded CDA time tag denoting when the Block 11 was queued for transmission. The format of the eight words comprising this tag is the same as that described for words 59-178 in Table 3-12.

3.3.7.2 Sounder Scan Documentation

The Sounder Scan Documentation Block 11 is analogous in function to the Imager documentation Block 0. It has the same priority as a Sounder Scan Block 11. The Sounder Scan Documentation Block 11 is always the first block of a Block 11 sequence constituting a Sounder scan line and consists of 8040 eight-bit words divided into the following four partitions:

Partition	Word Range
SAD ID (see Section 3.3.7.1)	1–30
Instrument and Scan Status	31–306
Sounder O&A parameters	307–1718
Factory Parameters	3005–8040

The SAD ID is described in Section 3.3.7.1 and its layout specified in Table 3-10 and Table 3-11. The remaining three partitions are described in the following sections and their layout specified in Table 3-12.

3.3.7.2.1 Instrument and Scan Status

This partition summarizes the status of the Sounder, the current sounding frame, and the radiometric detectors. Time tags denoting significant events and identifying various process entities are provided. In addition, coordinate information locating points is provided for the various reference frames.

3.3.7.2.2 Sounder O&A Data

This partition contains the parameters and coefficients describing the Sounder O&A data acquired from the OATS. The usage of the contained information depends upon the status of the IMC function. If IMC is enabled, the O&A data is valid for a fixed period called the registration interval. If IMC is disabled, the O&A values apply only to a single point in time. Under these conditions, the O&A information must be translated through time to the desired calculation point.

3.3.7.2.3 Factory Parameters

This partition provides factory measured calibration coefficients associated with each of the 76 channel-detectors. The detector misalignments with respect to the instrument's optical axis are included. In addition, the coefficients required to convert raw telemetry counts to engineering units are provided for those points employed by the SPS in processing the Sounder data stream.

Table 3-12. Sounder Scan Documentation Block 11 Format

Word	Name	Description
31–32	SSCAN*	Sounder scan status in two words, 16-bits. The MSB is bit 0 of word 1, and the LSB is bit 15 of word 2. For each status bit that does not have a bit value of 0 listed below, a value of 0 represents a condition that is opposite or negative of the condition associated with a bit value of 1. For example, if bit 0 has a value of 1, a frame start occurred on this scan; if bit 0 has a value of 0, no frame start occurred on this scan. **Bits** / **Value** / **Condition** 0 / 1 / Frame start 1 / 1 / Frame end 2 / 1 / Frame break – line(s) lost 3 / 1 / Line break – pixel(s) lost 4 / 1 / Priority 1 frame data 5 / 1 / Priority 2 frame data 6 / 0 / W-E scan / 1 / E-W scan 7 / 0 / N-S frame / 1 / S-N frame 8 / 1 / IMC enabled 9 / 1 / Dwell mode = 4 10 / 1 / Dwell mode = 2 11 / 1 / Dwell mode = 1 12 / 1 / N-S step mode = double 13 / 0 / Side 1 electronics active / 1 / Side 2 electronics active 14 / 1 / Visible normalization enabled 15 / 1 / IR calibration enabled SSCAN_P0 through SSCAN_P15
33–42	SDSTA*	Detector status in 10 words, 80-bits. First 76-bits, correspond to the 76 CDET in the Sounder, 1 bit per CDET in increasing CDET (1-1, 1-2, 1-3, 1-4, 2-1, …, 19-4) order. A set bit indicates the data for the associated CDET are suspect or invalid. The last 4-bits of word 42 are not used and always reset to zeros. SDSTA1 - 10
43–44	SRBCT	Total number of raw scan data blocks included in this scan. For dwell=1 or 2, values can range from 1 to a maximum of 1434 for a 23 deg wide frame. For dwell=4, the maximum is 5736 for a 23 deg wide frame.
45–46	SGBCT	Total number of Block 11s comprising the Sounder scan, including the Documentation Block. Values can range from 2 to a maximum of 132, 523 if dwell = 4, for a 23° wide scan with no line breaks.
47–48	SLOCT	Number of line breaks, raw data synchronization losses, contained in this scan.
49–50	SSBRK	Number of the pixel following the first star sense break. Ranges from 0–1758; 0 means no break.
51–52	SCBRK	Number of the pixel following the first calibration break. Ranges from 0–1758; 0 means no break.
53	SSCP1	Odd parity byte computed for SSCAN (see words 31–32).
54	SRELON	Relativization indication, 1 indicates function is active.
55–56	SNBOOST	With relativization enabled, this is the amount of boost (the arbitrary space count level).
57	YAWFL	Yaw-flip flag; bit 0 = 1 if the satellite is flipped, else = 0.
58		Spare–not used

Word	Name	Description
Words 59 – 178 provide 8-word CDA time tags for 15 specific events, with each time tag formatted as follows:		
Word	**Bits**	**BCD Formatted Contents**
1	0–3	Year in 1000s
	4–7	Year in 100s
2	0–3	Year in 10s
	4–7	Year in 1s
3	0-3	DOY in 100s *
	4-7	DOY in 10s
4	0–3	DOY in 1s
	4–7	Hours in 10s
5	0-3	Hours in 1s
	4–7	Minutes in 10s
6	0-3	Minutes in 1s
	4–7	Seconds in 10s
7	0-3	Seconds in 1s
	4–7	Msec in 100s
8	0-3	Msec in 10s
	4–7	Msec in 1s
Note: * Word 3, bit 0 = 1 indicates the time code generator has lost its external synchronization signal and is operating with an internal oscillator, a mode called flywheeling.		
59–66	TSCURR	Current SPS time
67–74	TSCLS	Time of scan line start
75–82	TSCLE	Time of scan line end
83–90	TCSLS	Time of calibration set at line start
91–98	TCSLE	Time of calibration set at line end
99-106	TSPFS	Time of priority frame start
107–114	TSNFS	Time of normal frame start
115–122	TSSPC	Time of last spacelook calibration
123–130	TSECL	Time of last ECAL
131–138	TSBBC	Time of last BB-Cal
139–146	TSSTR	Time of last star sense
147–154	TLRAN	Time of last ranging measurement
155–162	TSVIT	Time Tag of visible NLUTs set used
163–170	TSCLMT	Time Tag of current Limits set
171–178	TSONA	Time Tag current O&A set implemented
179–180		Spares – not used
The following 126 words provide information associated with the Sounder's reference frames and the current frame:		
181–182	RSSCT	Relative output scan sequence count since frame start. Ranges 1–396.
183–184	ASSCT	The current output scan number. Values of 1 – 396 correspond to scan swaths, northernmost to southernmost, in the Sounder's 9-cycle FOV.
185–186	SNSLN	The number of the northernmost visible detector scan line in the current scan. Inclusive values of 1 – 1579 correspond to detector lines, northernmost to southernmost, in the Sounder's 9-cycle FOV.

Word	Name	Description
187–188	SWFPX	The number of the westernmost visible pixel in the current frame. Inclusive values of 1 – 1754 correspond to the pixels, westernmost to easternmost, in the instrument's 5-cycle FOV.
189–190	SEFPX	The number of the easternmost visible pixel in the current frame. Inclusive values of 5 – 1758 correspond to the pixels, westernmost to easternmost, in the Sounder's 5-cycle FOV.
191–192	SNFLN	The number of the northernmost visible detector scan line in the current frame. Inclusive values of 1 – 1579 correspond to detector lines, northernmost to southernmost, in the Sounder's 9-cycle FOV.
193–194	SSFLN	The number of the southernmost visible detector scan line in the current frame. Inclusive values of 4 – 1582 correspond to detector lines, northernmost to southernmost, in the Sounder's 9-cycle FOV.
195–196	SMDPX	The number of the visible pixel corresponding to an instrument azimuth of 0°. Nominal value, ½ full range, is 879. This value is a constant per instrument.
197–198	SMDLN	The number of the scan line corresponding to an instrument elevation of 0°. Nominal value, ½ full range, is 791. This value is a constant per instrument.
199–200	SMDCT	The number of the output scan corresponding to an instrument elevation of 0°. Nominal value, ½ full range, is 198. This value is a constant per instrument.
The following four terms, words 201–214, are computed using the current O&A set. If IMC is on, the terms reflect the reference position subsatellite point. If IMC is off, the terms reflect the actual subsatellite point.		
201–202	SGVLN	The number of the visible detector scan line intersecting the subsatellite point.
203–204	SGVPX	The number of the visible pixel intersecting the subsatellite point.
205–206		Spares – not used
207–210	SUBLA2	The subsatellite latitude, a floating point number with units of degrees.
211–214	SUBLO2	The subsatellite longitude, a floating point number with units of degrees.
215–226		Spares – not used
227–230	SDBER	Current raw data BER, a floating point number denoting the most recent BER measure with nominal values on the order of 1.0E–6.
231–234	RANGE2	Most recently computed range, a floating point value denoting number of 50-MHz clock counts for signal transmission from satellite to ground.
235–238	GPATH2	Most recent range calibration ground path delay, a floating value denoting the number of 50-MHz clock counts that the GVAR signal takes to transit through CDA station equipment.
239–242	XMSNE2	The collimation tower range calibration value, a floating point value denoting the GVAR signal delay through the ground station's antenna feed and the spacecraft's Processed Data Relay (PDR) transponder in 50-MHz clock counts.
243–250	TGPAT2	GPATH measurement CDA TOD, in the same format as words 59–66.
251–258	TXMSN2	XMSNE measurement CDA TOD, in the same format as words 59–66.
259–260		Spares – not used
261	SFRAM	Current frame counter, an integer ranging from 0 – 255 identifying current frame. Rolls over to 0 following 255.
262	SMODE	Current sounding mode. Integer value, as follows: 1 = routine 2 = rapid scan operation 3 = super rapid scan operation 4 = checkout or special short-term operation 0,5 = 255 (undefined, not used)
The following 16 words, 263–278, contain frame-coordinate floating point values in units of degrees, with off-Earth coordinates indicated by a value of 999999.		
263–266	SFNW1	Current frame's Northwest corner latitude

Word	Name	Description
267–270	SFNW2	Current frame's Northwest corner longitude
271–274	SFSE1	Current frame's Southeast corner latitude
275–278	SFSE2	Current frame's Southeast corner longitude
279	SG2TN	Second-order gain interpolation table index number with integer values of 1, 2, or 3 denoting which of three possible tables are reported in SG2IT words 4567–5718.
280	SSCP2	**Repeat of SSCP1 (see word 53)
281–282	SSCA2	**Repeat of SSCAN (see words 31–32)
283-290	CSFST	Current Sounder Frame Start Time. CDA time tag - 8 words formatted in same manner as defined for words 59-178.
290–305		Spares – not used
306	PXOR7	Longitudinal parity (XOR) of words 1–305
The O&A partition contains the Sounder O&A parameters being used. The format and engineering units of each variable are denoted in parentheses. The partition is sized to hold the largest expected O&A set. In general, the actual number of parameters in effect is less than the maximum and vary over time. The numeric parameters, words 563–566 and 687–690, denote the number of active terms employed for the roll attitude angle. In a similar fashion, each of the remaining four angles modeled by the O&A set is denoted by numeric parameters defining the number of active terms. Inactive terms are not compressed out of the O&A set; their places are occupied by zeroed data words.		
307–310	IMCID2	IMC Identifier (4 ASCII characters)
311–322		Spares – not used
323–326	REFLO2	Reference Longitude (positive East, R*4, radians)
327–330	REFRA2	Reference radial distance from nominal (R*4, km)
331–334	REFLA2	Reference Latitude (positive North, R*4, radians)
335–338	REFOR2	Reference Orbit yaw (R*4, radians)
339–342	REROL2	Reference Attitude: Roll (R*4, radians)
343–346	REPIT2	Reference Attitude: Pitch (R*4, radians)
347–350	REYAW2	Reference Attitude: Yaw (R*4, radians)
351–358	EPODT2	Epoch Date and Time: Standard BCD format
359–362	IMCSET2	IMC set enable time from epoch (R*4, minutes)
363–366	COROL2	Spacecraft compensation: Roll (R*4, radians)
367–370	COPIT2	Spacecraft compensation: Pitch (R*4, radians)
371–374	COYAW2	Spacecraft compensation: Yaw (R*4, radians)
375–426	CHLON2	Change in longitude from ref. (13 at R*4, radians)
427–470	CHRAD2	Change in radial distance from ref. (11 at R*4, km)
471–506	SINLA2	Sine geocentric latitude, total (9 at R*4, no units)
507–542	SIYAW2	Sine orbit yaw, total (9 at R*4, no units)
543–546	DAYSO2	Daily Solar Rate (R*4, radians per minute)
547–550	START2	Exponential Start time from epoch (R*4, minutes)
The following words, 551–770, apply to the roll attitude angle:		
551–554	EXMAGR2	Exponential Magnitude (R*4, radians)
555–558	EXTICR2	Exponential Time Constant (R*4, minutes)
559–562	MATANR2	Constant, mean attitude angle (R*4, radians)
563–566	SINANR2	Number of Sinusoids/Angles (I*4, none)
567–570	MAG1SR2	Magnitude of first-order sinusoid (R*4, radians)
571–574	PA1SDR2	Phase angle of first-order sinusoid (R*4, radians)

Word	Name	Description
575–686	**	**Repeat 567–574 for second-order through 15th-order sinusoids (R*4, radians) MAG#SR2, # = 1 through 9, MAG#SR2, # = 2 through 9, PA#SDR2, # = 2 through 9, MA##SR2, ## = 10 through 15, PA##SR2, ## = 10 through 15.
687–690	NUMMSR2	Number of monomial sinusoids (I*4, no units)
691–694	OAPS1R2	Order of applicable sinusoid (I*4, no units)
695–698	O1MSDR2	Order of first monomial sinusoid (I*4, no units)
699–702	MMSD1R2	Magnitude of monomial sinusoid (R*4, radians)
703–706	PAMS1R2	Phase angle of monomial sinusoid (R*4, radians)
707–710	AEMZ1R2	Angle from epoch where monomial is zero (R*4, radians)
711–770	**	**Repeat 691–710 for second – fourth monomials OAPS#R2, # = 2 through 4 O#MSDR2, # = 2 through 4 MMSD#R2, # = 2 through 4 PAMS#R2, # = 2 through 4 AMEZ#R2, # = 2 through 4
771–990	**	**Repeat 551–770 for Pitch attitude angle EXMAGP2 EXTICP2 MATANP2 SINANP2 MAG#SP2, where # = 1 through 9 PA#SDP2, where # = 1 through 9 MA##SP2, where ## = 10 through 15 PA##SP2, where ## = 10 through 15 NUMMSP2 OAPS#P2, where # = 1 through 4 O#MSDP2, where # = 1 through 4 MMSD#P2, where # = 1 through 4 PAMS#P2, where # = 1 through 4 AMEZ#P2, where # = 1 through 4
991–1210	**	**Repeat 551–770 for Yaw attitude angle EXMAGY2 EXTICY2 MATANY2 SINANY2 MAG#SY2, where # = 1 through 9 PA#SDY2, where # = 1 through 9 MA##SY2, where ## = 10 through 15 PA##SY2, where ## = 10 through 15 NUMMSY2 OAPS#Y2, where # = 1 through 4 O#MSDY2, where # = 1 through 4 MMSD#Y2, where # = 1 through 4 PAMS#Y2, where # = 1 through 4 AMEZ#Y2, where # = 1 through 4

Word	Name	Description
1211–1430	**	**Repeat 551–770 for Roll Misalignment angle EXMAGRM2 EXTICRM2 MATANRM2 SINANRM2 MAG#SRM2, where # = 1 through 9 PA#SDRM2, where # = 1 through 9 MA##SRM2, where ## = 10 through 15 PA##SRM2, where ## = 10 through 15 NUMMSRM2 OAPS#RM2, where # = 1 through 4 O#MSDRM2, where # = 1 through 4 MMSD#RM2, where # = 1 through 4 PAMS#RM2, where # = 1 through 4 AMEZ#RM2, where # = 1 through 4
1431–1650	**	**Repeat 551–770 for Pitch Misalignment angle EXMAGPM2 EXTICPM2 MATANPM2 SINANPM2 MAG#SPM2, where # = 1 through 9 PA#SDPM2, where # = 1 through 9 MA##SPM2, where ## = 10 through 15 PA##SPM2, where ## = 10 through 15 NUMMSPM2 OAPS#PM2, where # = 1 through 4 O#MSDPM2, where # = 1 through 4 MMSD#PM2, where # = 1 through 4 PAMS#PM2, where # = 1 through 4 AMEZ#RM2, where # = 1 through 4
1651–1652	SSCA3	**Repeat of SSCAN (see words 31–32)
1653	SSCP3	**Repeat of SSCP1 (see word 53)
1654–1717		Spares – not used
1718	PXOR8	Longitudinal parity (XOR) of words 307–1717
1719–2994		Unused – zeroes
2995–3002	SPSSATTIM	Satellite database modified time (BCD time)
3003–3004	SPSSATVER	Satellite database version number
The factory parameters partition contains the values of various Sounder coefficients and parameters measured prior to launch. For the most part, these values serve as an historical reference useful in evaluating the current condition of the detectors. In a few instances, the values are used throughout the life of the instrument as part of the normal calibration functions. The nadir location of the instrument is measured in terms of cycles and increments in the N-S and E-W directions (see Section 3.4). Cycles are expressed as 8-bit integers ranging from 0 – 127. Increments are expressed as 16-bit integers ranging from 0 – 2804.		
3005	SOFNC	Instrument nadir, top-bottom cycles
3006	SOFEC	Instrument nadir, right-left cycles
3007–3008	SOFNI	Instrument nadir, top-bottom increments
3009–3010	SOFEI	Instrument nadir, right-left increments
For each of the 16 sounding detectors (4 visible, 12 IR), two 16-bit integer values are provided to denote the X (right-left) and Y (top-bottom) µradian offset of the detector from the instrument's optical axis. Negative values employ two's complement notation. Values can range from –32,768 to +32,767.		
3011–3012	XOVDA	X-offset Visible detector 1 (A)
3013–3014	XOVDB	X-offset Visible detector 2 (B)

Word	Name	Description
3015–3016	XOVDC	X-offset Visible detector 3 (C)
3017-3018	XOVDD	X-offset Visible detector 4 (D)
3019–3020	XOLIA	X-offset Longwave IR detector 1 (A)
3021–3022	XOLIB	X-offset Longwave IR detector 2 (B)
3023–3024	XOLIC	X-offset Longwave IR detector 3 (C)
3025–3026	XOLID	X-offset Longwave IR detector 4 (D)
3027–3028	XOMIA	X-offset Midwave IR detector 1 (A)
3029–3030	XOMIB	X-offset Midwave IR detector 2 (B)
3031–3032	XOMIC	X-offset Midwave IR detector 3 (C)
3033–3034	XOMID	X-offset Midwave IR detector 4 (D)
3035–3036	XOSIA	X-offset Shortwave IR detector 1 (A)
3037–3038	XOSIB	X-offset Shortwave IR detector 2 (B)
3039–3040	XOSIC	X-offset Shortwave IR detector 3 (C)
3041–3042	XOSID	X-offset Shortwave IR detector 4 (D)
3043–3044	YOVDA	Y-offset Visible detector 1 (A)
3045–3046	YOVDB	Y-offset Visible detector 2 (B)
3047–3048	YOVDC	Y-offset Visible detector 3 (C)
3049-3050	YOVDD	Y-offset Visible detector 4 (D)
3051–3052	YOLIA	Y-offset Longwave IR detector 1 (A)
3053–3054	YOLIB	Y-offset Longwave IR detector 2 (B)
3055–3056	YOLIC	Y-offset Longwave IR detector 3 (C)
3057–3058	YOLID	Y-offset Longwave IR detector 4 (D)
3059–3060	YOMIA	Y-offset Midwave IR detector 1 (A)
3061–3062	YOMIB	Y-offset Midwave IR detector 2 (B)
3063–3064	YOMIC	Y-offset Midwave IR detector 3 (C)
3065–3066	YOMID	Y-offset Midwave IR detector 4 (D)
3067–3068	YOSIA	Y-offset Shortwave IR detector 1 (A)
3069–3070	YOSIB	Y-offset Shortwave IR detector 2 (B)
3071–3072	YOSIC	Y-offset Shortwave IR detector 3 (C)
3073–3074	YOSID	Y-offset Shortwave IR detector 4 (D)
The following three arrays contain the three factory-measured coefficients for quadratic calibration equation for each sounder visible-channel (channel 19) detector. The coefficients are single-precision floating point numbers that can be applied to the downlinked relativized and normalized sounder scene data, which are 13-bit numbers, to generate radiances. (Users can retrieve the 13-bit scene data from the 16-bit GVAR integers by dividing them by 8.) Each of the three arrays contains four coefficients, one for each of the visible channel's four detectors. The detector ordering—1 through 4—is in the top-to-bottom sense indicated in Figure 3-15.		
3075–3090	SVCRB*	Visible detector characteristic response bias coefficients array. SVCRB_P0 - P3
3091–3106	SVCR1*	Visible detector characteristic response first-order gain coefficients array. SVCR1_P0 - P3
3107–3122	SVCR2*	Visible detector characteristic response second-order gain coefficients array. SVCR2_P0 - P3
3123–3126	SVRAL	Visible detector radiance-to-albedo conversion factor. Single value for detectors 1 - 4.

Word	Name	Description
The following five arrays contain the factory-measured calibration coefficients and the scaling coefficients, respectively, for the 18 sounder IR channels. All are single-precision floating point numbers. The calibration coefficients were applied to the downlinked 13-bit raw sounder data to produce radiances, which are single-precision floating-point numbers. The scaling coefficients are the coefficients of the linear equation that transformed those radiances to the16-bit integers transmitted in the GVAR. Each of the five arrays contains 72 elements consisting of 18 groups (one for each IR channel) of four elements (one for each detector). The channel ordering is sequential—1 through 18. The detector ordering—1 through 4—is in the top-to-bottom sense indicated in Figure 3-15.		
3127–3414	SICRB*	IR detector characteristic response bias coefficients array. SICRB_P0 - P71
3415–3702	SICR1*	IR detector characteristic response first-order gain coefficients array. SICR1_P0 - P71
3703–3990	SICR2*	IR detector characteristic response second-order gain coefficients array. SICR2_P0 - P71
3991–4278	SISFB*	IR detector scale factor bias coefficients array. SISFB_P0 - P71
4279–4566	SISF1*	IR detector scale factor first-order gain coefficients array. SISF1_P0 - P71
4567–5718	SG2IT*	IR detector second-order gain interpolation table containing 288 elements. The elements are sequentially arranged as 72 groups, four elements per group. The first four elements are assigned to Channel 1-Detector 1 with the next four to Channel 1-Detector 2, and so on until the last group of four, which is assigned to Channel 18-Detector 4. SG2IT_P0 - P287
5719–5734	SG2BP*	IR detector second-order gain baseplate temperature interpolation pivot points. Four baseplate temperatures at which SG2IT gains were measured for each IR detector. Access this table with baseplate temperature to determine interpolation factors to use within SG2IT. SG2BP_P0 - P3
5735–6886	SBBTR*	BB temperature-to-target radiance conversion coefficients array. Array of 288 elements, four elements for each of 72 IR CDET. Elements are ordered in the same manner as described for SG2IT. SBBTR_P0 - P287
6887–6910	SPRNG*	Patch temperature control ranges, an array of six elements. Two elements comprise each of the three patch temperature control ranges. Each pair of elements defines the lower and upper temperature limits assigned to a patch control point. SPRNG_P0 - P5
6911–6912	SADCP	A constant to correct the positive analog count values for the discontinuity at zero caused by the A–D converter.
6913–6914	SADCN	A constant to correct the negative analog count values for the discontinuity at zero caused by the A–D converter.
6915–7342		Spares – not used
The following words contain conversion coefficients for each telemetry point whose engineering units value is used for calibration or alarm monitoring functions by the SPS. Conversion factors for unused telemetry points may be ascertained from reference document SJ-572022.		
7343–7346	SCHTA	Sounder Cooler Housing PRT coefficients. The final letter of the term name (A – F) denotes the type. To convert raw counts to engineering units: $Temp = A + BX + CX^2 + DX^3$ The last two terms (E-F) are set equal to zero.
7347–7350	SCHTB	Refer to 7343–7346 description.
7351–7354	SCHTC	Refer to 7343–7346 description.

Word	Name	Description
7355–7358	SCHTD	Refer to 7343–7346 description.
7359–7362	SCHTE	Refer to 7343–7346 description.
7363–7366	SCHTF	Refer to 7343–7346 description.
7367–7370	SEL1A	Sounder Electronics #1 Thermistor coefficients. The final letter of the term name (A – F) denotes the type. See Eq 3.6-5 and 3.6-6 for usage.
7371–7374	SEL1B	Refer to 7367–7390 description.
7375–7378	SEL1C	Refer to 7367–7390 description.
7379–7382	SEL1D	Refer to 7367–7390 description.
7383–7386	SEL1E	Refer to 7367–7390 description.
7387–7390	SEL1F	Refer to 7367–7390 description.
The A–F naming convention used above with SEL1_ is also used for the following thermistor terms:		
The A–F naming convention used above with SCHT_ is also used for the following thermistor terms:		
7391–7414	SEL2*	Sounder Electronics Side No. 2 thermistor terms SEL2A – F
7415–7438	SBP1*	Baseplate thermistor No. 1 terms SBP1A – F
7439–7462	SBP2*	Baseplate thermistor No. 2 terms SBP2A – F
7463–7486	SBP3*	Baseplate thermistor No. 3 terms SB3A – F
7487–7510	SBP4*	Baseplate thermistor No. 4 terms SBP4A – F
7511–7534	SBP5*	Baseplate thermistor No. 5 terms SBP5A – F
7535–7558	SBP6*	Baseplate thermistor No. 6 terms SBP6A – F
7559–7582	SBB1*	BB thermistor No. 1 terms SBB1A – F
7583–7606	SBB2*	BB thermistor No. 2 terms SBB2A – F
7607–7630	SBB3*	BB thermistor No. 3 terms SBB3A – F
7631–7654	SBB4*	BB thermistor No. 4 terms SBB4A – F
7655–7678	SBB5*	BB thermistor No. 5 terms SBB5A – F
7679–7702	SBB6*	BB thermistor No. 6 terms SBB6A – F
7703–7726	SBB7*	BB thermistor No. 7 terms SBB7A – F
7727–7750	SBB8*	BB thermistor No. 8 terms SBB8A – F
7751–7774	SOP1*	Scan Mirror thermistor terms SOP1A – F
7775–7798	SOP2*	Primary Mirror thermistor terms SOP2A – F
7799–7822	SOP3*	Secondary Mirror thermistor No. 1 terms SOP3A - F

Word	Name	Description
7823–7846	SOP4*	Secondary Mirror thermistor No. 2 terms SOP4A – F
7847–7870	SOP5*	Baffle thermistor No. 1 terms SOP5A – F
7871–7894	SOP6*	Baffle thermistor No. 2 terms SOP6A – F
7895–7918	SOP7*	Aft optics thermistor terms SOP7A – F
The next four telemetry points use the following mapping to convert raw counts to engineering units: $Temp = A + BX + CX^2 + DX^3$		
7919–7942	SOP8*	Cooler radiator PRT terms SOP8A - F The last two terms (E-F) are set equal to zero.
7943–7966	SOP9*	Wide range IR detector PRT terms SOP9A – F
7967–7990	SOPA*	Narrow range IR detector PRT terms SOPAA – F
7991–8014	SOPB*	Filter wheel housing PRT terms SOPBA – F
The remaining three telemetry points use a simple linear gain and bias mapping to convert raw counts to engineering units, as follows:		
8015–8022	SFVGB*	Filter wheel heater gain or bias terms SFVGB_P0 - P1
8023–8030	SPVGB*	Patch control voltage gain or bias terms SPVGB_P0 - P1
8031–8038	SICGB*	Instrument current gain or bias terms SICGB_P0 - P1
8039		Spare–not used
8040	PXOR9	Longitudinal parity (XOR) of words 3005–8039

3.3.7.3 Sounder Scan Data

Sounder data is buffered within SPS memory until an entire scan line of downlinked, raw Sounder data blocks has been acquired. The number of raw blocks acquired can range from five (for a 0.016° dwell 1 scan) to 4788 (for a 19.2° dwell 4 scan). Each raw block contains all of the data acquired at one aim point, including a sample from each of the 76 CDET. Each CDET output is treated as if it were a separate scan line.

Radiometrically corrected, hereafter termed calibrated, versions of these detector scan lines are then created. The creation process uses all of the calibration coefficient sets that were applicable during the course of the Sounder scan. The set applied to a given pixel is determined by comparing the time tag of the pixels' raw data block (see Section 3.3.7.3.1) with the time tag(s) of the available calibration coefficient sets (see Section 3.3.7.9). The set(s) applicable at the start and end of the Sounder scan are directly identified in the documentation block (see Table 3-12, words 83–98).

Following this creation, the resulting 76 scan lines and the raw data scan blocks are each divided into segments, 11 samples in length in a W-E order. The segments are then organized into a number of

groups from 1–436. Each group consists of a string of 11 raw Sounder data blocks and an associated 11-pixel subset for each of the 76 calibrated scan lines. A scan line and pixel identifier data structure is then created for each group to cross-reference the grouped information for display functions. Finally, a SAD ID is attached to complete the transformation of each group into a Sounder Scan Data Block 11 format.

The SAD ID links multiple Block 11s together to form a complete output scan. The final Block 11 in an output scan is likely to be only partially filled with 1 – 10 samples. Partially filled Block 11s also occur as a result of line breaks. A line break in the scan is caused by a loss of raw signal synchronization, which causes the loss of one or more raw downlink data blocks. The Block 11 where the line break starts is partially filled with samples acquired up to the break. The next sequential Block 11 is then initiated with samples acquired upon restoration of synchronization. The actual number of samples in a Block 11 is indicated by the associated SAD ID record count (see Table 3-10, word 9).

Physically, the layout of the Sounder Scan Data Block 11 format is always the same, with permanent space allocations for a full 11 sample segment. The data section which results is summarized below and diagramed in Figure 3-19. The SAD ID is defined in the preceding section. The remaining components of each segment are covered in the following sections:

Data Section Component	Words	Bits	Documented in Section
SAD ID	30	240	3.3.7.1
Instrument Data Records	5984	47872	3.3.7.3.1
Line and Pixel Indexes	354	2832	3.3.7.3.2
Detector Data Arrays	1672	13376	3.3.7.3.3

P/N SYNCH CODE	(10,032-bits)
HEADER	(720-bits)
SAD ID	(240-bits)
SOUNDER DATA RECORDS 11 Records at 4352-bits Each	(47,872-bits)
LINE and PIXEL LOCATORS	(2,832-bits)
DETECTOR DATA ARRAYS 76 Lines of Calibrated Pixels @ 11 Pixels per Line	(13,376-bits)

Figure 3-19. Sounder Scan Data Block 11 Format

3.3.7.3.1 Sounder Data Records

Each Sounder data record in a Block 11 is 544 eight-bit words, 4352-bits, in length. The first 500 words contain a modified raw downlink Sounder data block. The modifications are performed automatically by the SPS's Sensor Data Interface (SDI) software processes. These modifications include replacing of the leading 8-word (64-bit) block synchronization code with a time tag, and adjusting the format of the remaining 492 words (see Section 3.5.5). The time tag denotes when the synchronization code was received by the SPS. The Sounder scan data time tag is used to select the calibration coefficient set to be used for the data record during the scan line creation sequence.

The last 44 words are appended to each raw block by the SPS and provide status and Earth location information. The status data denotes a number of conditions registered by the SDI software processes when the raw block was received. The Earth location data provides the latitude and longitude on the Earth's surface of the aim point used by the Sounder during the collection of the raw data contained within the record, and the Earth locations associated with the four channel 8 detectors. Table 3-13 defines the contents of the 544-word instrument data record constructed by the SPS. Up to 11 of these records are packed into a Block 11 as follows:

Words	Contents
1–30	SAD ID
31–574	Record 1 (westernmost record in the Block 11)
575–1118	Record 2
1119–4926	Records 3–9
4927–5470	Record 10
5471–6014	Record 11 (easternmost record in the Block 11)

Table 3-13. Sounder Data Records Block 11

Words	Name	Description
1–500	RSDBC*	The 250, 16-bit words contained in a raw Sounder data block, with each 16-bit raw data word occupying two sequential 8-bit words. The first four of these 250 data words contain the SPS raw data block arrival time tag, which the SPS substituted for the four word raw data block synchronization code. The raw data block content is defined in Space Systems/Loral (SS/L) Specification SJ-572022.
501–504	RSDBC*	Raw Sounder data interface status words, two 16-bit words generated at end of each raw block by the receiving hardware providing configuration and data status. The contents are as follows: **Word** / **Bits** / **Description** 1 / 0–7 / Synchronization code error count 1 / 8 / Bit slip sign (1 = negative) 1 / 9 / Not used 1 / 10–11 / Input channel 1 / 12 / Data loss 1 / 13 / Clock loss 1 / 14 / Sync fault 1 / 15 / First frame after synch loss flag 2 / 0–7 / Bit slip magnitude 2 / 8–15 / Parity error count
The remaining 40 words provide the Earth locations in degrees of five reference points in floating point format. If a reference point does not intersect the Earth, 999999.0 is used for both latitude and longitude.		
505–508	APLAT*	Aim Point Latitude
509–512	APLON*	Aim Point Longitude
513–516	DALAT*	Channel 8 Detector 1 (A) (Northwest) Latitude
517–520	DALON*	Channel 8 Detector 1 (A) Longitude
521–524	DBLAT*	Channel 8 Detector 2 (B) Latitude
525–528	DBLON*	Channel 8 Detector 2 (B) Longitude
529–532	DCLAT*	Channel 8 Detector 3 (C) Latitude
533–536	DCLON*	Channel 8 Detector 3 (C) Longitude
537–540	DDLAT*	Channel 8 Detector 4 (D) (Southeast) Latitude
541–544	DDLON*	Channel 8 Detector 4 (D) Longitude

3.3.7.3.2 Line and Pixel Index Arrays

The aim point employed by the Sounder corresponds to its optical axis, approximately the geometric center of the FOV of the scanning detectors. The general form of the relationship is illustrated in Figure 3-20. The instrument operates by settling at a selected aim point, sampling each of the 76 channel-detectors, and then stepping E-W to the next aim point. The resultant raw block generated for each sampling contains pixels asymmetrically distributed with respect to the aim point. When constructing the detector data arrays the SPS "slides" the 76 calibrated scan lines by one another such that the transmitted GVAR Sounder scan data blocks contain calibrated pixel data, which is aligned in Earth location with the downlink data blocks (see Section 3.3.7.3.3). As a result, the 76 scan line segments are aligned in lines of longitude with each other and ready for preliminary display purposes.

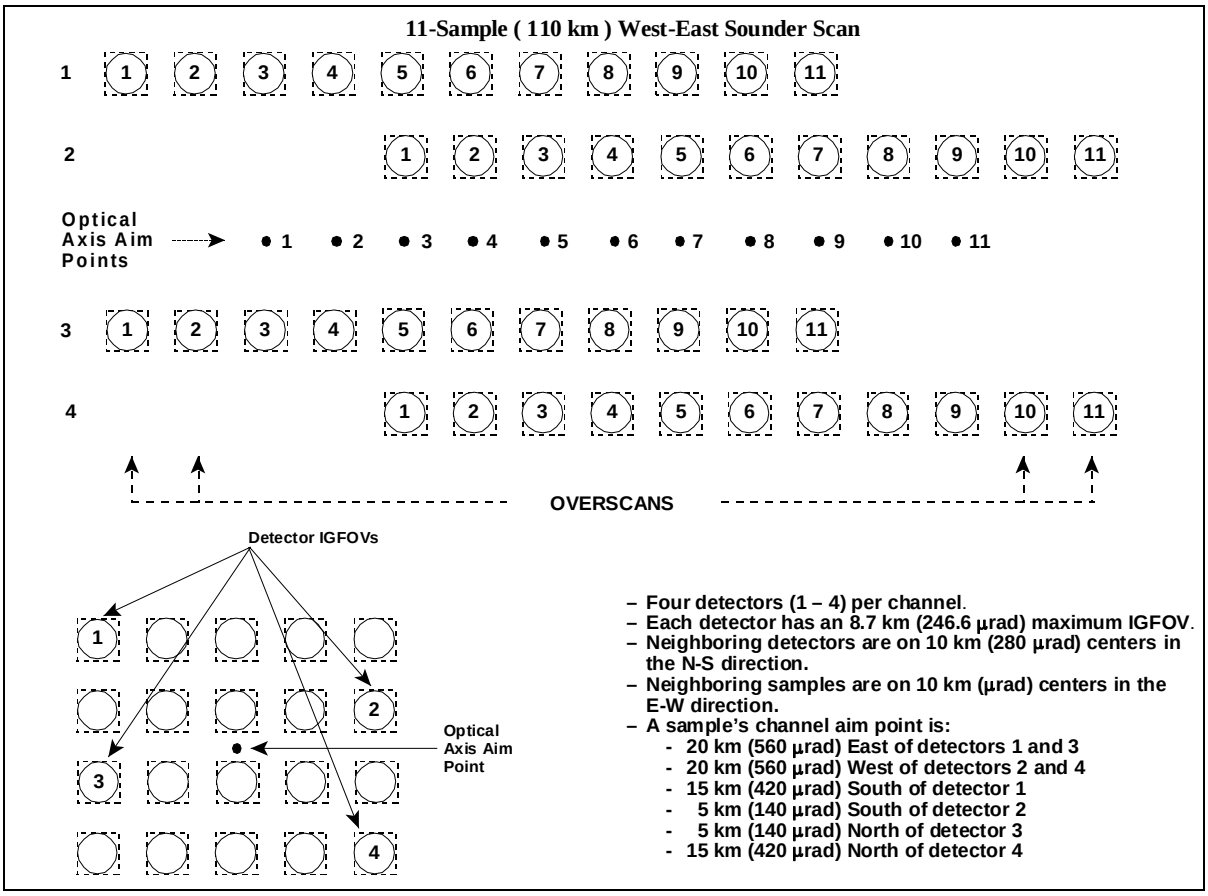

Figure 3-20. Sounder Detector FOV vs. Aim Point

The detector lines and pixel locators are provided for the scan line segments to assist the display effort. Table 3-14 defines the format of the information. Note that the scan line and pixel locations are provided in absolute terms (not relative to start-of-frame location). In addition to the line and

pixel locators, two (f) flags are provided to indicate the presence of a line break start or end condition.

A line break start indicates one or more raw downlink data blocks are missing from the scan. The last raw block acquired before the onset of the break is included in the Block 11. The remaining raw block slots, 0 – 10, will be unoccupied, as will the associated detector data array locations. The next sequential Block 11 of the scan begins with the scan data acquired when the line break ended, a condition normally associated with the reestablishment of signal synchronization by the SPS.

Table 3-14. Sounder Detector Line and Pixel Locator Block 11

Word	Contents	Description
6015–6016	ALINENO	16-bit binary number denoting the detector 1 scan line number. The value provides a vertical display reference and ranges from 1 – 1577.
6017–6018	BLINENO	16-bit detector 2 scan line number
6019–6020	CLINENO	16-bit detector 3 scan line number
6021–6022	DLINENO	16-bit detector 4 scan line number
6023–6044	PIXLNO*	Eleven pixel numbers, each 16-bits (two words) in length. Each number specifies the instrument relative West-to-East aim point associated with one of the 11 pixels of a single detector data array. The value, ranging from 1 – 1758, is used to provide a horizontal reference for displays. Sequential pixels from multiple dwells will have the same number. PIXLNO_P0 - P10
6045	SLOSS	Flag denoting synchronization loss has occurred in this Block 11. Set to zero in case of no loss. Set to 255 (all bits set to 1) if synch has been lost.
6046	SRESTORE	Flag denoting whether synch has been restored in this Block 11. All bits set to 1 (=255) if restore present; else all bits are zero.
6047–6368		Not used – zeroes

To access the raw data associated with a calibrated pixel, satellite orientation (normal or yaw-flipped) must be considered because it affects the relationship of the physical detectors 1–4 to the logical detectors A–D. In the normal satellite orientation, the relationship is as follows:

Physical Detector		**Logical Detector**
1	=	A (Northwest)
2	=	B
3	=	C
4	=	D (Southeast)

In the yaw-flipped mode, the relationship is as follows:

Physical Detector		**Logical Detector**
4	=	A (Northwest)
3	=	B
2	=	C
1	=	D (Southeast)

Hence, the calibrated pixel arrays are always ordered North-to-South and West-to-East, regardless of the satellite orientation. A yaw-flip indicator is provided in the SAD ID as well as in word 57 of the Sounder documentation block.

It is important to note that ITT Industries, Defense Products and Services Segment, Aerospace/ Communication Unit (ITT) numbers the Sounder detectors differently than SPS does in GVAR. In ITT documentation, detector numbering begins with the bottom right detector as number one and the top left detector as number four.

In addition, the positional alignment discussed previously causes a misalignment with respect to time between the calibrated pixel information and the downlink data blocks. The time aligned raw data associated with the kth calibrated pixel can be located in the ith downlink data block as follows:

a. For detectors "1" and "2", i = k + 2 * dmode
b. For detectors "2" and "4," i = k – 2 * dmode

where *k* ranges from 1 – 11 and *dmode* is either 1, 2, or 4 according to the current dwell mode. If *i* exceeds 11, the desired downlink block is in the next sequential SAD block. If *i* is less than 1, the desired downlink data is located in the previous SAD block.

Figure 3-20 depicts a West-to-East scan of 110 km as provided by Sounder channel *n*. The aim points 1 – 11 are each bracketed by a distinct set of four FOVs corresponding to each of the four detectors in a channel. Note that aim point number 3 is the first aim point for which detectors 2 and 4 have data available, while detectors 1 and 3 have no data available after aim point 9.

Figure 3-21 represents the Sounder scan data block resulting from the 110 km scan of Figure 3-20. The relationships between the 11 downlink sensor data blocks and the resultant calibrated detector scan lines is depicted. A scan length of 110 km (11 raw data blocks) was selected to illustrate the boundary conditions at the start and end of a line of pixels using only one Block 11. For longer width scans, the non-present (zero) pixels depicted in Figure 3-21 would occur in only the first (detectors 2 and 4) and last (detectors 1 and 3) Block 11s of the scan sequence.

SOUNDER DATA RECORD No. 1 Earth Location Aim Point 1 k = 1 544 8-bit words (see Table 3-14)
• Raw data blocks are ordered by Earth location W-E, such that sample *n* is always either collocated or West of sample *n*+ 1 •
SOUNDER DATA RECORD 11 Earth Location Aim Point 11 k = 11

Display Data (Table 3-15)

1 lines	2 lines	3 lines	4 lines	Line numbers denote absolute scan lines (1–1580) for all channel-detectors 1–4.						
AP No. 1	2	3	4	5	6	7	8	9	10	11

Values denote absolute instrument pixel numbers (1–1758).

Calibrated Sounder Pixel Data (Table 3-16)

CHANNEL	k = 1	2	3	4	5	6	7	8	9	10	11
	1 (3)	1 (4)	1 (5)	1 (6)	1 (7)	1 (8)	1 (9)	1 (10)	1 (11)	0	0
	0	0	2 (1)	2 (2)	2 (3)	2 (4)	2 (5)	2 (6)	2 (7)	2 (8)	2 (9)
	3 (3)	3 (4)	3 (5)	3 (6)	3 (7)	3 (8)	3 (9)	3 (10)	3 (11)	0	0
01	0	0	4 (1)	4 (2)	4 (3)	4 (4)	4 (5)	4 (6)	4 (7)	4 (8)	4 (9)
02 • • 19	1 (3) • • 0	Four Channel 01 arrays are repeated for each of the 18 remaining channels								• • 4 (9)	

Figure 3-21. Sounder Raw and Block 11 Data for the Sample 110-km Scan

3.3.7.3.3 Detector Data Arrays

There are 72 calibrated IR detector data arrays and four normalized visible detector data arrays contained in a Sounder sensor data block, for a total of 76 detector data arrays. Each array is 11 pixels in length. Each calibrated IR pixel is 16 bits wide, occupying two sequential 8-bit words. Each normalized visible pixel (from channel 19 detectors) is 13 bits wide, left-adjusted and zero-filled within the 16-bit field. The source raw data pixels have 13-bit precision. Part of the calibration process employed involves a scaling operation to provide 16 bits of precision. Pixels whose raw data contain a parity error are assigned a value of zero. A value of zero is also assigned to the two non-present pixels at the start (detectors 2 and 4) and end (detectors 1 and 3) of a scan.

The 76 detector data arrays are allocated space within the Block 11 Sounder Channel-Detector array indicated in Table 3-15. Labeling of detectors with numbers 1, 2, 3, and 4 is done in the same North-to-South sense indicated in Figure 3-20.

Table 3-15. Block 11 Sounder Channel-Detector Array Assignments

Sounder Channel	Detector			
	1	2	3	4
01	6369–6390	6391–6412	6413–6434	6435–6456
02	6457–6478	6479–6500	6501–6522	6523–6544
03	6545–6566	6567–6588	6589–6610	6611–6632
04	6633–6654	6655–6676	6677–6698	6699–6720
05	6721–6742	6743–6764	6765–6786	6787–6808
06	6809–6830	6831–6852	6853–6874	6875–6896
07	6897–6918	6919–6940	6941–6962	6963–6984
08	6985–7006	7007–7028	7029–7050	7051–7072
09	7073–7094	7095–7116	7117–7138	7139–7160
10	7161–7182	7183–7204	7205–7226	7227–7248
11	7249–7270	7271–7292	7293–7314	7315–7336
12	7337–7358	7359–7380	7381–7402	7403–7424
13	7425–7446	7447–7468	7469–7490	7491–7512
14	7513–7534	7535–7556	7557–7578	7579–7600
15	7601–7622	7623–7644	7645–7666	7667–7688
16	7689–7710	7711–7732	7733–7754	7755–7776
17	7777–7798	7799–7820	7821–7842	7843–7864
18	7865–7886	7887–7908	7909–7930	7931–7952
19	7953–7974	7975–7996	7997–8018	8019–8040

Each of the 76 arrays is aligned with one another such that the kth element of each array corresponds to the same Earth-located line of longitude. The associated aim point coordinates, latitude and longitude, can be obtained by accessing the kth downlink data block.

3.3.7.4 Compensation and Servo Error Terms

Both the Imager and the Sounder employ two-degree of freedom scan mirrors for which active positioning involves the use of compensation terms. These terms correct for motions caused by cyclical variations in the spacecraft's orbit and attitude as well as short-term variations caused by movement of the other instrument. The total compensation employed by each instrument is split into a N-S and an E-W component associated with the two servo-controlled mirror axes. These component compensations, and the associated servo positioning errors, are reported by each of the instruments in the raw downlink data stream containing the imaging data. Samples of the compensation terms, servo errors, instrument location, time, and instrument status are buffered by the SPS for each instrument. As these sampling buffers fill, the SPS places them in an appropriate Block 11 format and transmits them through the GVAR uplink to a PM at the SOCC. The PM, on acquiring the compensation term Block 11, transmits the associated data to the OATS for use in monitoring each instrument's IMC and MMC component terms.

Samples are buffered by the SPS on a per instrument basis. Each instrument buffer is 64 samples in length and transmitted when either of the following conditions occur:

a. Buffer fills (64th sample acquired).
b. More than 120 seconds of non-productive instrument activity (e.g., Imager off) has elapsed.

Each 22-word group is made up of 11 pairs of 8-bit words corresponding to the 11 pixel locations for the indicated channels and detectors.

The second condition listed above can result in partial buffer transmissions. The number of samples contained in a block is indicated by the RECORD COUNT field of the SAD ID (see Table 3-10). The Block 11 format employed for the Imager and Sounder compensation terms uses the record format detailed in Table 3-16.

Table 3-16. Instrument Compensation Term Records Block 11

Words	Name	Description
1–2	ISSRF*	Instrument status for Sounder record as follows: **Bit** — **Meaning (If Set)** 1 — Spacelook in progress 2 — ECAL in progress 3 — BB-Cal in progress 4 — Normal frame in progress 5 — Priority 1 frame in progress 6 — Priority 2 frame in progress 7 — E-W scan 8 — S-N frame 9 — IMC active 10 — Dwell mode = 4 11 — Dwell mode = 2 12 — Dwell mode = 1 13 — N-S step mode = double 14 — Side 2 electronics active 15 — Star Sense in progress 16 — Instrument Slew in progress
1–2	ISIRF*	Instrument status for Imager record as follows: **Bit** — **Meaning (If Set)** 1 — Spacelook in progress 2 — Preclamp scan in progress 3 — BB-Cal in progress 4 — Normal frame in progress 5 — Priority 1 frame in progress 6 — Priority 2 frame in progress 7 — E-W scan 8 — S-N frame 9 — IMC active# 10 — Scan Clamp Mode active 11 — Fast Space Clamp Mode active (9.2 seconds) 12 — Slow Space Clamp Mode active (36.6 seconds) 13 — Reversal Data 14 — Side 2 electronics active# 15 — Star Sense in progress 16 — Instrument Slew in progress
3–10	TTASI	CDA time tag associated with sample, formatted as described in Table 3-6 for words 23–110.

Words	Name	Description
Note: # Bits 9 and 14 in word 2 are determined from SPS configuration flags. All other remaining bits are determined directly from the raw downlinked data.		
11–12	ILEWC	Instrument location: E-W cycles
13–14	ILEWI	E-W increments
15–16	ILNSC	N-S cycles
17–18	ILNSI	N-S increments
19–20	NSCTI	N-S compensation term for instrument
21–22	EWCTI	E-W compensation term for instrument
23–24	NSSEI	N-S servo error term for instrument
25–26	ESSEI	E-W servo error term for instrument

Notes:

1. The last eight terms, words 11 – 26, are each 16-bits in length. The corresponding instrument values are right-adjusted and zero-filled within the 16 bits.
2. Up to 64 compensation term records are transmitted in a GVAR Block 11 format, with the actual number of records indicated in the RECORD COUNT field of the SAD ID (see Table 3-10, word 9). Each record is 26 8-bit words long, as above. Unused data space within the Block 11 is zero-filled.
3. If a record is generated and no compensation or servo error data is available, the corresponding terms in the record are set to zero, such as parity errors in Sounder or dead zones in Imager reversals.
4. If an Imager record is generated and the time tag is estimated by the SPS, the flywheel bit of the record is set.
5. Every reversal data sequence yields three ICSE records. The time and mirror positions of the first of these records is the trailer data block, while the compensation and servo error terms are acquired from the data block immediately following the trailer. The remaining two records generated for an Imager reversal sequence are assigned interpolated time tags and mirror positions. The servo error and compensation terms for these two records are set to zero since there are no corresponding samples available in the wideband data stream.
6. The Sounder compensation and servo error records are much easier to explain. First, the sampling rate associated with the Sounder is 10 samples per second. Every raw downlink data block generates a compensation and servo error record while the SPS is operational. The record's time tag is taken as the time tag of the associated raw data block, while the mirror position is as reported in the block. The E-W compensation terms are taken directly from words 187 and 191 of the raw data block. The E-W servo error terms are obtained directly from words 181 and 192 of the same raw data block.

The Instrument Compensation and Servo Errors (ICSE) records are generated at a constant rate of 15 samples per second, whether a data function is active or not. These functions are always prefaced by a header block in the raw downlink data stream and include frame scans (normal and priority), calibration events (spacelook and BB), and star senses. For these functions, sampling starts on the first downlink data block following a header block and continues at every 364th data block thereafter. Compensation and servo error terms are acquired directly from the downlinked wideband data blocks. The associated sample time and instrument location are calculated after the fact by interpolation between the header and trailer block end-points.

There are two special conditions to be considered. The first of these is related to the ICSE records generated for a star sense data set. The compensation and servo error terms in these records are the averaged values computed from the sums generated by the Imager SDI software processes. This summation is an unavoidable artifact of the star sense processing by the hardware.

The second special condition concerns the records generated for the intervals in which a data function is not active, that is, when the Imager is generating reversal sequences in the wideband data stream. Imager reversal sequences are generated at a nominal rate of five per second. They occur

under a number of conditions, including idle, slew, and settling (at a star sense address, at the BB address, or at a frame start address).

3.3.7.5 Telemetry Statistics

Telemetry data statistics are reported for each instrument through the Block 11 format defined in Table 3-17. Critical alarm and warning flags associated with the statistics are defined in Table 3-18 and Table 3-19, respectively. The instrument telemetry points included in the statistics are listed in Table 3-20 and Table 3-21for the Imager and Sounder, respectively.

In general, all telemetry points associated with the quality of the calibration functions are included in the statistics computations. The interval over which the statistics are accumulated is defined by the SPS time of data clock for the Imager, with every two-minute mark denoting a completion point. For the Sounder, the telemetry statistics are accumulated between spacelook events, nominally, every two minutes. The occurrence of a spacelook calibration event terminates the current telemetry statistics accumulation period, while concurrently initiating a new accumulation set.

Table 3-17. Instrument Telemetry Block 11 Format

Words	Name	Description
1–30	**	**SAD ID (see Section 3.3.7.1)
31–38	TFTSSI	CDA time of first telemetry sample set (imager)
39–46	TCLSI	CDA time of current limits set (imager)
47–54	TLTSSI	CDA time of last telemetry sample set (imager)
55–70	TCAFI*	(4 x 4) Telemetry Critical Alarm Flags (see Table 3-18) TCAFI_P#_P where # = 1 - 3 TCAFI_P#_P## where # = 1 -3 and where ## = 0 - P25
71–198	TWFI*	(2 x 64) Telemetry Warning Flags (see Table 3-19) TWFI_P#_P where # = 0 - 28 TWFI_P#_P## where # = 0 - 28 and where ## = 0 – 9
199–220		Unassigned
221	EIEIO	Electronics Side active: 0 = Side 1, 255 = Side 2
222	PXOR10	Longitudinal parity (XOR) of words 1–221
Instrument Telemetry Statistics		
223–350	TSSI*	(2 x 64) Total sample size TSSI_P0 - 28
351–478	FSSI*	(2 x 64) Filtered sample size FSSI_P0 - 28
479–606	UMNCI*	(2 x 64) Unfiltered minimum value – counts UMNCI_P0 - P28
607–734	FMNCI*	(2 x 64) Filtered minimum value – counts FMNCI_P0 - P28
735–862	UMXCI*	(2 x 64) Unfiltered maximum value – counts UMXCI_P0 - P28
863–990	FMXCI*	(2 x 64) Filtered maximum value – counts FMXCI_P0 - P28
991–1246	UMECI*	(4 x 64) Unfiltered mean value – counts UMECI_P0 - P28

Words	Name	Description
1247–1502	FMECI*	(4 x 64) Filtered mean value – counts FMECI_P0 - P28
1503–1758	USDCI*	(4 x 64) Unfiltered σ – counts USDCI_P0 - P28
1759–2014	FSDCI*	(4 x 64) Filtered σ – counts FSDCI_P0 - P28
2015–2270	FMNEI*	(4 x 64) Filtered minimum – engineering units FMNEI_P0 - P28
2271–2526	FMXEI*	(4 x 64) Filtered maximum – engineering units FMXEI_P0 - P28
2527–2782	FMEEI*	(4 x 64) Filtered mean – engineering units FMEEI_P0 - P28
2783–3038	FSDEI*	(4 x 64) Filtered σ – engineering units FSDEI_P0 - P28
Instrument Telemetry Statistics		
3039	PXOR11	Longitudinal parity (XOR) of words 223–3038
3040–8040		Spares – not used

Notes:

1. Telemetry flag definitions are provided in Table 3-18 and Table 3-19. Temperature-critical alarm flag definitions are provided in Table 3-32 and Table 3-33 and for the Imager and the Sounder, respectively. Telemetry point assignments are provided in Table 3-20 and Table 3-21 for the Imager and Sounder.
2. Arrays are sized to handle up to 64 telemetry points. Each of the *N* x 64 arrays above is defined in a parallel fashion, in that the Kth entry refers to the same telemetry point in all arrays.
3. With the exception of the flag words, the elements of all 2 x 64 arrays are 16-bit positive integer values, right-adjusted and zero-filled within the allocated bit space.
4. The elements of all 4 x 64 arrays are single precision floating point values whose format is described in Section 3.5.

Table 3-18. Instrument Telemetry Critical Alarm Flag Definitions

Words	Name	Associated Critical Alarm Condition
There are four critical alarm flag structures defined for the telemetry points of each instrument as follows:		
55–58	TCAFI_P0*	Insufficient filtered sample size TCAFI_P0_P0 - P25
59–62	TCAFI_P1*	Filtered mean below low critical limit TCAFI_P1_P0 - P25
63–66	TCAFI_P2*	Filtered mean exceeds high critical limit TCAFI_P2_P0 - P25
67–70	TCAFI_P3*	Filtered σ exceeds critical limits TCAFI_P3_P0 - P25
Flag	**Telemetry Points**	
Each of the four-word critical alarm flag structures has 32 flag bits, numbered 1 – 32, where bit 1 is the MSB of the first word and 32 is the LSB of the fourth word. Each flag bit is set to one if the associated condition is true and reset to zero if the condition is false. The flags are defined in a parallel fashion within these structures in that the kth entry in each structure refers to the same telemetry point. The assignment of flag bits to telemetry points is as follows:		
1	Electronics Temperature No. 1	
2	Electronics Temperature No. 2	
3	Sensor Assy Baseplate Temperature No. 1	
4	Sensor Assy Baseplate Temperature No. 2	
5	Sensor Assy Baseplate Temperature No. 3	
6	Sensor Assy Baseplate Temperature No. 4	
7	Sensor Assy Baseplate Temperature No. 5	
8	Sensor Assy Baseplate Temperature No. 6	
9	BB Target Temperature No. 1	
10	BB Target Temperature No. 2	
11	BB Target Temperature No. 3	
12	BB Target Temperature No. 4	
13	BB Target Temperature No. 5	
14	BB Target Temperature No. 6	
15	BB Target Temperature No. 7	
16	BB Target Temperature No. 8	
17	Scan Mirror Temperature	
18	Telescope Primary Temperature	
19	Telescope Secondary Temperature No. 1	
20	Telescope Secondary Temperature No. 2	
21	Telescope Baffle Temperature No. 1	
22	Telescope Baffle Temperature No. 2	
23	Aft Optics Temperature	
24	Cooler Radiator Temperature	
25	Wide Range IR Detector Temperature	
26	Narrow Range IR Detector Temperature	
27	Filter Wheel Housing Temperature (Sounder only)	
28–32	Unassigned –always zero	

Notes: The critical alarm flags in words 59–70 are determined by the engineering unit value of each point.

Table 3-19. Instrument Telemetry Warning Flag Definitions

Flag	Telemetry Points
Each of the two-word telemetry warning flag structures has 16 flag bits numbered 1 – 16, where bit 1 is the MSB of the first word and bit 16 is the LSB of the second. Each flag bit is set to 1 if the associated condition is true and reset to 0 if the associated condition is false. Flag bits for which no conditions are defined are always 0, as are flag words for which no telemetry point is assigned. The flag bits in each warning flag structure are defined in a parallel fashion in that the kth bit always refers to the same condition, regardless of which telemetry point is referenced. (The telemetry points are each assigned a warning flag structure; Table 3-20 and Table 3-21 provide a telemetry point or warning flag cross-reference for the Imager and the Sounder, respectively.) The flag-bits definitions for each of the warning flag structures is as follows:	
1	Unassigned – always zero
2	Unassigned – always zero
3	Unassigned – always zero
4	Unassigned – always zero
5	Unassigned – always zero
6	Unassigned – always zero
7	Filtered sample size too small
8	Unfiltered mean value (counts) below low limit
9	Filtered mean value (counts) below low limit
10	Unfiltered mean value (counts) exceeds high limit
11	Filtered mean value (counts) exceeds high limit
12	Unfiltered σ value (counts) exceeds limit
13	Filtered σ value (counts) exceeds limit
14	Filtered mean value (engineering units) low
15	Filtered mean value (engineering units) high
16	Filtered σ value (engineering units) high

Table 3-20. Imager Telemetry Point Assignments

Array Entry No.	Name	Warning Flags	Telemetry Point Description
1	TWFI_P0*	[71–72]	Electronics Temperature No. 1 TWFI_P0_P0 - P9
2	TWFI_P1*	[73–74]	Electronics Temperature No. 2 TWFI_P1_P0 - P9
3	TWFI_P2*	[75–76]	Sensor Assy Baseplate Temperature No. 1 TWFI_P2_P0 - P9
4	TWFI_P3*	[77–78]	Sensor Assy Baseplate Temperature No. 2 TWFI_P3_P0 - P9
5	TWFI_P4*	[79–80]	Sensor Assy Baseplate Temperature No. 3 TWFI_P4_P0 - P9
6	TWFI_P5*	[81–82]	Sensor Assy Baseplate Temperature No. 4 TWFI_P5_P0 - P9
7	TWFI_P6*	[83–84]	Sensor Assy Baseplate Temperature No. 5 TWFI_P6_P0 - P9
8	TWFI_P7*	[85–86]	Sensor Assy Baseplate Temperature No. 6 TWFI_P7_P0 - P9
9	TWFI_P8*	[87–88]	BB Target Temperature No. 1 TWFI_P8_P0 - P9
10	TWFI_P9*	[89–90]	BB Target Temperature No. 2 TWFI_P9_P0 - P9
11	TWFI_P10*	[91–92]	BB Target Temperature No. 3 TWFI_P10_P0 - P9
12	TWFI_P11*	[93–94]	BB Target Temperature No. 4 TWFI_P11_P0 - P9
13	TWFI_P12*	[95–96]	BB Target Temperature No. 5 TWFI_P12_P0 - P9
14	TWFI_P13*	[97–98]	BB Target Temperature No. 6 TWFI_P13_P0 - P9
15	TWFI_P14*	[99–100]	BB Target Temperature No. 7 TWFI_P14_P0 - P9
16	TWFI_P15*	[101–102]	BB Target Temperature No. 8 TWFI_P15_P0 - P9
17	TWFI_P16*	[103–104]	Scan Mirror Temperature TWFI_P16_P0 - P9
18	TWFI_P17*	[105–106]	Telescope Primary Temperature TWFI_P17_P0 - P9
19	TWFI_P18*	[107–108]	Telescope Secondary Temperature No. 1 TWFI_P18_P0 - P9
20	TWFI_P19*	[109–110]	Telescope Secondary Temperature No. 2 TWFI_P19_P0 - P9
21	TWFI_P20*	[111–112]	Telescope Baffle Temperature No. 1 TWFI_P20_P0 - P9
22	TWFI_P21*	[113–114]	Telescope Baffle Temperature No. 2 TWFI_P21_P0 - P9
23	TWFI_P22*	[115–116]	Aft Optics Temperature TWFI_P22_P0 - P9
24	TWFI_P23*	[117–118]	Cooler Radiator Temperature TWFI_P23_P0 - P9

Array Entry No.	Name	Warning Flags	Telemetry Point Description
25	TWFI_P24*	[119–120]	Wide Range IR Detector Temperature TWFI_P24_P0 - P9
26	TWFI_P25*	[121–122]	Narrow Range IR Detector Temperature TWFI_P25_P0 - P9
27	TWFI_P26*	[123–124]	Patch Control Voltage TWFI_P26_P0 - P9
28	TWFI_P27*	[125–126]	Instrument Current TWFI_P27_P0 - P9
29	TWFI_P28*	[127–128]	Cooler-Housing Temperature TWFI_P28_P0 - P9
30–64		[129–198]	Unassigned–zeros

Notes: Square-bracketed numbers denote the warning flag words associated with that point. The definition of the flag bits within the warning flag words is provided in Table 3-19.

Table 3-21. Sounder Telemetry Point Assignments

Array Entry No.	Name	Warning Flags	Telemetry Point Description
1	TWFS_P0*	[71–72]	Electronics Temperature No. 1 TWFS_P0_P0 - 9
2	TWFS_P1*	[73–74]	Electronics Temperature No. 2 TWFS_P1_P0 - 9
3	TWFS_P2*	[75–76]	Sensor Assy Baseplate Temperature No. 1 TWFS_P2_P0 - 9
4	TWFS_P3*	[77–78]	Sensor Assy Baseplate Temperature No. 2 TWFS_P3_P0 - 9
5	TWFS_P4*	[79–80]	Sensor Assy Baseplate Temperature No. 3 TWFS_P4_P0 - 9
6	TWFS_P5*	[81–82]	Sensor Assy Baseplate Temperature No. 4 TWFS_P5_P0 - 9
7	TWFS_P6*	[83–84]	Sensor Assy Baseplate Temperature No. 5 TWFS_P6_P0 - 9
8	TWFS_P7*	[85–86]	Sensor Assy Baseplate Temperature No. 6 TWFS_P7_P0 - 9
9	TWFS_P8*	[87–88]	BB Target Temperature No. 1 TWFS_P8_P0 - 9
10	TWFS_P9*	[89–90]	BB Target Temperature No. 2 TWFS_P9_P0 - 9
11	TWFS_P10*	[91–92]	BB Target Temperature No. 3 TWFS_P10_P0 - 9
12	TWFS_P11*	[93–94]	BB Target Temperature No. 4 TWFS_P11_P0 - 9
13	TWFS_P12*	[95–96]	BB Target Temperature No. 5 TWFS_P12_P0 - 9
14	TWFS_P13*	[97–98]	BB Target Temperature No. 6 TWFS_P13_P0 - 9
15	TWFS_P14*	[99–100]	BB Target Temperature No. 7 TWFS_P14_P0 - 9

Array Entry No.	Name	Warning Flags	Telemetry Point Description
16	TWFS_P15*	[101–102]	BB Target Temperature No. 8 TWFS_P15_P0 - 9
17	TWFS_P16*	[103–104]	Scan Mirror Temperature TWFS_P16_P0 - 9
18	TWFS_P17*	[105–106]	Telescope Primary Temperature TWFS_P17_P0 - 9
19	TWFS_P18*	[107–108]	Telescope Secondary Temperature No. 1 TWFS_P18_P0 - 9
20	TWFS_P19*	[109–110]	Telescope Secondary Temperature No. 2 TWFS_P19_P0 - 9
21	TWFS_P20*	[111–112]	Telescope Baffle Temperature No. 1 TWFS_P20_P0 - 9
22	TWFS_P21*	[113–114]	Telescope Baffle Temperature No. 2 TWFS_P21_P0 - 9
23	TWFS_P22*	[115–116]	Aft Optics Temperature TWFS_P22_P0 - 9
24	TWFS_P23*	[117–118]	Cooler Radiator Temperature TWFS_P23_P0 - 9
25	TWFS_P24*	[119–120]	Wide Range IR Detector Temperature TWFS_P24_P0 - 9
26	TWFS_P25*	[121–122]	Narrow Range IR Detector Temperature TWFS_P25_P0 - 9
27	TWFS_P26*	[123–124]	Filter Wheel Housing Temperature TWFS_P26_P0 - 9
28	TWFS_P27*	[125–126]	Filter Wheel Control Heater Voltage TWFS_P27_P0 - 9
29	TWFS_P28*	[127–128]	Patch Control Voltage TWFS_P28_P0 – 9
30	TWFS_P29*	[129–130]	Instrument Current TWFS_P29_P0 – 9
31	TWFS_P30*	[131–132]	Cooler Housing Temperature TWFS_P30_P0 - 9
32–64		[133–198]	Unassigned–zeros

Notes: Square-bracketed numbers denote the warning flag words associated with the telemetry point. The definition of the flag bits within the warning flag words is provided in Table 3-19.

The final statistics are computed and formatted for output at the end of accumulation periods. The final statistics include raw value (counts), and engineering unit quantities. The total unfiltered sample size is provided along with the filtered sample size remaining after high or low limit checking has been performed. Raw value statistics include the minimum, maximum, mean, and standard deviation (σ) in both the unfiltered and filtered states. Engineering unit value statistics are provided for the filtered minimum, maximum, mean, and standard deviations.

Two categories of alarm conditions are provided with the statistics. The warning alarm flags are of lower importance and serve to indicate the existence of outliers within the data. The critical alarm flags are more important because they are used to indicate the existence of a condition that can preclude a successful calibration of the IR detectors.

3.3.7.6 Electronic Calibration Statistics and Data

Each instrument periodically performs an ECAL to measure the performance of the signal processing circuitry associated with each radiometric detector. The ECAL applies a known input level to each circuit (at the point where the detector signal would normally be received) and records the resulting output counts. A total of 16 different input levels (or steps) are sequentially employed to span the full range of the signal processing circuitry. The resulting set of measured output counts are analyzed on the ground to determine the stability and linearity of the processing circuitry. The results of the analysis, as well as the associated raw data, are packaged in Block 11 formats for transmission within the GVAR data stream. Table 3-22 defines the Block 11 formats (two for GOES I-N, three for GOES O-P) required for the Imager ECAL data stream. Table 3-23 defines the three Block 11 formats required for the Sounder ECAL data stream.

Table 3-22. Imager ECAL Block 11 Format

Block 1 Words	Name	Description
1–30	**	**SAD ID (see Section 3.3.7.1)
31–38	FHDFEI	CDA time of first header block following ECAL data
39–46	TSCLSI	CDA time of current limits set
47–54		Unassigned
55–84	IFSSFI*	(2 x 15) Insufficient filtered samples or step flags††† IFSSFI_P#_P where # = 0 - 14 IFSSFI_P#_P## where # = 0 - 14, and ## = 0 – 15 GOES O-P 8th IR det @ block#3 wd#223
85–86	ERRWI*	(2 x 1) Excessive Root Mean Square (RMS) of residuals warning flags† ERRWI_P0 - P14 GOES O-P 8th IR det @ block#3 wd#225
87–220		Spares – not used
221	SAMNI	Electronics side active: 0 = Side 1, 255 = Side 2
222	PXOR14	Longitudinal parity (XOR) of words 1–221
Imager ECAL Statistics Records		
223–1566	SIRDRI*	Seven IR detector records at 192 words** GOES O-P 8th IR det @ block#3 wd#231
1567–3102	EDDRI*	Eight visible detector records at 192 words**
3103	PXOR15	Longitudinal parity (XOR) of words 223–3102
3104–3198		Spares – not used
Imager ECAL Raw Data Records		
3199–5438	SIRRDI*	Seven 320-word IR detector raw data records†† GOES O-P 8th IR det @ block#3 wd#423
5439–5478		Spares – not used
5479–8038	SVDRDI*	Visible detectors 1–2, 1280 words of raw data for each††
8039-8040		Spares – not used

Block 2 Words	Name	Description
1–30	**	**SAD ID (see Section 3.3.7.1)
31–221		Spares – not used
222	PXOR16	Longitudinal parity (XOR) of words 1–221
Imager ECAL Raw Data Records		
223–7902	TVDRDI*	Visible detectors 3–8, raw data at 1280 words each††
7903–8040		Spares – not used
Block 3 Words	**Name**	**Description**
Block 3 is only provided for GOES-O and beyond.		
1-30	**	**SAD ID (see Section 3.3.7.1)
31-221		Spares – not used
222-222	PXOR61	Longitudinal parity (XOR) of words 1-221
223-224	IFSSFI*	(2 x 1) Insufficient filtered samples/step flags††† GOES I-N IR dets 1-7 @ block#1 wd#55
225-225	ERRWI*	Excessive RMS of residuals warning flags for 8th IR detector † (0 or 1) GOES I-N IR dets 1-7 @ block#1 wd#85
226-230		Spares – not used
231-422	SIRDRI*	Eighth IR detector records at 192 words** GOES I-N IR dets 1-7 @ block#1 wd#223)
423-742	SIRRDI*	Eighth IR detector 320-word raw data records†† GOES I-N IR dets 1-7 @ block#1 wd#3199)
743-8040		Spares – not used

Notes:

† The RMS of residuals flag structure employs bits 1 – 7 for the IR detectors and bits 8 – 15 for the visible detectors (see words 85–86). Word 225 in Block 3 corresponds to the 8th IR detector introduced in GOES-O. Bit 1 is the MSB of word 85 and bit 16 is the LSB of word 86. Each bit is set to true when the RMS of the residuals over the entire 16-step ECAL exceeds a warning limit for the associated detector; otherwise, it is zero. Bit 16, the LSB of word 86, is not used and is always zero. Word 225 in block3 is set when the RMS of the residuals over the entire 16-step ECAL exceeds a warning limit for the 8th detector.

** Each of the detector-statistics records has the following layout in which all elements in (4 x *N*) arrays are in floating point format (see words 223–3102, and Block 3 words 231-742 [GOES-O and Beyond, only]):

Word	Description
1–16	(1 x 16) Total sample size each step
17–32	(1 x 16) Filtered sample size each step
33–96	(4 x 16) Mean Filtered Value each step
97–100	(4 x 1) Least Squares line slope
101–104	(4 x 1) Least Squares line intercept
105–168	(4 x 16) Residuals, each step
169–172	(4 x 1) RMS of residuals
173–192	Spares – not used

†† Each IR detector raw data record contains 160 samples (10 samples per step) in ascending order from step 1 samples through step 16 samples (see words 3199-5438, Block 1; words 423-742, Block 3). Each 10-bit sample is right-adjusted and zero-filled within the 16-bit space provided. Each visible detector raw data record contains 640 samples, 40 samples per step, ordered in the same step 1 through step 16 sequence employed in the IR detector records. Each 10-bit visible sample occupies two sequential 8-bit words, packed in the same right-adjusted zero-filled manner as the IR detector data values. Note that all of the ECAL raw data samples are pure data, in that no calibration or normalization is present. Also note that, as a result of electronic filter delays, one or more starting samples may be invalid at each step for each channel. The number of leading invalid samples is provided in Table 3-30, words 4387–4430.

††† Each of the two-word flag structures contains 16 bits (see words 55–84, Block 1; words 223-224, block 3). Each of the 16-step warning flags is assigned to an active detector. In Block 1, Elements 1 – 7 correspond to IR detectors 1–7, respectively. Elements 8 – 15 correspond to visible detectors 1 – 8, respectively. The words in Block 3 correspond to the 8th IR detector introduced in GOES-O. The 16 bits of each 2-word step warning flag are sequentially assigned to each ECAL step, with bit 1 to step 1 and bit 16 to step 16. Flag bits are set to true if too few filtered samples are acquired per given detector at a particular ECAL step; otherwise, they are set to zero.

Table 3-23. Sounder ECAL Block 11 Format

Block 1 Words	Name	Description
1–30	**	**SAD ID (see Section 3.3.7.1)
31–38	TFECALS	CDA time of first ECAL data block
39–46	TCLMSS	CDA time of current limits set
47–58		Spares – not used
59–90	IFSSFS*	(2 x 16) Insufficient filtered samples per step flags†† IFSSFS_P#_P where # = 0 - 15 IFSSFS_P#_P0 - P15 where # = 0 – 15
91–92	RRRWFS*	(2 x 1) Excessive RMS of Residuals warning flags†† RRRWFS_P0 - P15
93–108	CNUEDS*	(16 x 1) For each of 16 detectors, channel No. used CNUEDS_P0 - P15
109–220		Spares – not used
221	WHFSDC	Electronics Side active: 0 = Side 1, 255 = Side 2
222	PXOR17	Longitudinal parity (XOR) of words 1–221
Sounder ECAL Statistics Records		
223–990	FVCDRS*	Four visible CDET records at 192 words
991–1758	FLIDRS*	Four long-wave IR detector records at 192 words†
1759–2526	FMIDRS*	Four mid-wave IR detector records at 192 words†
2527-3294	FSIDRS*	Four short-wave IR detector records at 192 words†
3295	PXOR62	Longitudinal parity (XOR) of words 223–3294
3296–8040		Spares – not used

Notes:

† Each of the 16 detector-statistics records has the following layout, where all 4 x *N* array elements are in floating point format (see words 223 – 3294):

Word	Description
1–16	(1 x 16) Total sample size each step
17–32	(1 x 16) Filtered sample size each step
33–96	(4 x 16) Filtered Value each step
97–100	(4 x 1) Least Squares line slope
101–104	(4 x 1) Least Squares line intercept
105–168	(4 x 16) Residuals, each step
169–172	(4 x 1) RMS of residuals
173–192	Spares – not used

†† Each of the 17 two-word flag structures contains 16 bits (see words 59 – 92). See Block 1 notes for assignments.

Block 2 Words	Name	Description
1–30	**	**SAD ID (see Section 3.3.7.1)
Sounder ECAL Raw Data Records		
31–574	SLDAS1*	ECAL step 1 Sounder data block
575–1118	SLDAS2*	ECAL step 2 Sounder data block
1119–1662	SLDAS3*	ECAL step 3 Sounder data block
1663–2206	SLDAS4*	ECAL step 4 Sounder data block
2207–2750	SLDAS5*	ECAL step 5 Sounder data block
2751–3294	SLDAS6*	ECAL step 6 Sounder data block
3295–3838	SLDAS7*	ECAL step 7 Sounder data block
3839–4382	SLDAS8*	ECAL step 8 Sounder data block
4383–4926	SLDAS9*	ECAL step 9 Sounder data block
4927–5470	SLDAS10*	ECAL step 10 Sounder data block
5471–6014	SLDAS11*	ECAL step 11 Sounder data block
6015–8040		Spares – not used

Block 3 Words	Name	Description
1–30	**	**SAD ID (see Section 3.3.7.1)
Sounder ECAL Raw Data Records		
31–574	SLDAS12*	ECAL step 12 Sounder data block
575–1118	SLDAS13*	ECAL step 13 Sounder data block
1119–1662	SLDAS14*	ECAL step 14 Sounder data block
1663–2206	SLDAS15*	ECAL step 15 Sounder data block
2207–2750	SLDAS16*	ECAL step 16 Sounder data block
2751–8040		Spares – not used

Notes:

1. Each of the Block 1, step-warning flags is assigned to an active detector as follows (see Sounder ECAL Block 1 words 59 – 90):
   Elements 1 – 4 are assigned to visible CDET 1 – 4
   Elements 5 – 8 are assigned to IR longwave CDET 1 – 4
   Elements 9 – 12 are assigned to IR mid wave CDET 1 – 4
   Elements 13 – 16 are assigned to IR short wave CDET 1 – 4
2. The 16 bits of each two-word step warning flag are sequentially assigned to each ECAL step, with bit 1 to step 1 and bit 16 to step 16. The flag bits are set to true if the associated conditions occur for a given detector at a particular ECAL step; otherwise, they are reset to zero.
3. The 16 bits of the RMS of residuals flag are sequentially assigned to each of the 16 CDET (see Sounder ECAL Block 1 words 91–92). The assignments are in the same 1 – 16 order denoted for the step warning flags. Each bit is set to true if the RMS of the residuals over the entire 16-step ECAL exceeds a warning limit for the associated detector; otherwise, it is zero.

An Imager ECAL is performed, on average, once 30 minutes just prior to a BB-Cal sequence. At each of the 16 step levels, 40 samples are acquired from each of the eight visible detector circuits. Concurrently, 10 samples are acquired at each step level from each of the active IR detector circuits.

A number of leading samples are automatically excluded from the analysis at each step level. The number of samples discarded varies according to the channel involved (see Table 3-30). The discarding of samples is a function of the time delay associated with the signal processing circuitry.

The samples remaining in each step are filtered using high and low limits specified in Table 3-30 to discard outliers from the analysis. The resulting filtered sample sets are individually averaged at each step level. For each detector circuit, the 16 step averages are fitted with a linear least squares line. The residuals are computed as the difference between each step level average and the step level calculated using the least squares line. The RMS value of the 16 residuals is then computed for each detector.

In the case of the Sounder, an ECAL is performed on average every 20 minutes, again just prior to a BB-Cal sequence. Stability and linearity statistics are computed for the 16 10-km detectors representing the four spectral bands (visible, shortwave IR, medium wave IR, and long wave IR). The eight star sensing detectors are ignored. Only one channel is used as the data source for each of the 16 detectors.

The available channels associated with each detector are as follows:

Spectrum	Channel No.
4 detectors – visible	19
4 detectors – shortwave IR	13 – 18
4 detectors – medium wave IR	8 – 12
4 detectors – long wave IR	1 – 7

The actual channel used as the data source for each detector is specified in words 93–108 of ECAL Block 1 (see Table 3-21). The sample at each step level is filtered using high and low limits specified in Table 3-31 to discard outliers. For each detector a linear least squares curve is computed for the 16 step samples. The residual differences between the curve and the input step level averages is computed, and an RMS of the residuals is calculated for each detector.

3.3.7.7 Spacelook Calibration Statistics and Data

Each instrument performs a spacelook calibration sequence at frequent intervals. The spacelook calibration positions the scanning mirror at an extreme E-W coordinate permitting a view of space. Samples acquired from the imaging detectors while space is being viewed provide the measurements required to compute a new value for the bias term associated with each IR detector. The statistics developed from a spacelook sequence, as well as the underlying raw data, are packaged in Block 11 formats. The remainder of this section presents the spacelook calibration sequence, instrument peculiarities, and calibration bias adjustment specifics. Section 3.6 should be referenced for further information concerning the calibration algorithms.

The Imager performs a spacelook calibration sequence at rates based on the current activity of the instrument. The rates can vary from once every second (narrow scan clamp frame) to once every 36.6 seconds (priority 1 space clamp frame).

Regardless of the rate, each spacelook has the following three stages:

a. Preclamp – provides up to 400 raw data blocks.
b. Clamp – provides no data.
c. Postclamp – provides up to 400 raw data blocks.

During the preclamp stage, space is viewed by the instrument while samples from the imaging detectors are being generated. The IR detectors use these samples to compute the drift bias. The drift bias is used with the previous postclamp bias to compute the bias rate of the detector since the last clamp event.

The clamp operation generates no directly observable samples. Electronic in nature, the clamp dynamically adjusts the low-level output of each detector to the common background level represented by space.

The postclamp stage occurs immediately following the clamping operation. Data from the postclamp set is used to compute a new bias term for each IR detector. A separate but identical data analysis is performed on both the preclamp and the postclamp samples. The minimum, maximum, mean, and standard deviation of the spacelook values, both filtered and unfiltered, are computed for each detector. Various warning flags are generated if predefined limits for the various statistics are exceeded.

With the conclusion of the spacelook data set analysis, a check is performed to determine if a 2-minute interval has expired since the last GVAR Block 11 report was generated. If one has, a new set of Block 11 spacelook data is constructed and queued for output in GVAR. This format includes one full set of preclamp and postclamp information (statistics and raw data) and summary statistics for all of the intervening clamp events since the last 2-minute report. The six Block 11s used to transport this information are defined in Table 3-24. The warning flags included with the statistics are defined in Table 3-25.

In Table 3-22, the data beginning with word 1183 of block 1 and ending with word 4546 of block 3 are the statistics for all the spacelooks occurring in the two-minute period that ends with the postclamp at the time indicated in words 127-134 of block 1. These data are ordered in time, beginning at a "reference" time (defined below) that is nominally two minutes before the final postclamp event. There can be data for as many as 120 spacelooks in that two-minute period. The times of each pre-clamp and post-clamp data acquisition, relative to the "reference" time, and in units of hundredths of a second, are listed sequentially in words 3583-4062 of block 3. The reference time is the time of the ending post-clamp event (words 127-134) minus the relative time of the ending postclamp (the last entry in words 3823-4062).

At the same time, computation of the updated calibration bias terms for the IR detectors may be performed using the filtered mean values generated by the spacelook data analysis. If, as a result of filtering, too few samples are included in a detector's mean value, no calibration bias term update is performed for that detector. Results of the calibration are reported in the Block 11 format described in Section 3.3.7.9.

Table 3-24. Imager Spacelook Block 11 Format

Block 1 Words	Name	Description
1-30	**	**SAD ID (see Section 3.3.7.1)
31-38	FTTSHBI	CDA formatted time tag of spacelook header block.
39-46	CTCLSI	CDA time of current limits set.
47-50 47-48 49-50	PCSLNUM PCWPNUM	(2 x 2) Preclamp scan line and the pixel number at the mid-point of pre-clamp spacelook.
51–54 51-52 53-54	PSSLNUM PSWPNUM	(2 x 2) Postclamp scan line and the pixel number at the mid-point of post-clamp spacelook.
55–84	SLWFI*	(2 x 15) Spacelook warning flags (see Table 3-25). See Block 7, words 223-224 for flags for the 8th IR detector (GOES-O and beyond). SLWFI_P#_P0 - P8 where # = 0 - 6 SLWFI_P#_P0 - P6 where # = 7 - 14
85–114	PCWFI*	(2 x 15) Preclamp warning flags (see notes) See Block 7, words 225-226 for flags for the 8th IR detector (GOES-O and beyond). PCWFI _P#_P0 - P8 where # = 0 - 6 PCWFI _P#_P0 - P6 where # = 7 - 14
115–117	SLCAFI*	Spacelook critical alarm flags (see notes) See Block 7, word 227 for flags for the 8th IR detector (GOES-O and beyond). SLCAFI_P0 - P21
118		Spare–not used
119–126	TTPRCD	CDA time tag for preclamp data
127–134	TTPOCD	CDA time tag for postclamp data
135–220		Spares – not used
221	ANOTHER	Electronics Side active: 0 = Side 1, 255 = Side 2
222	PXOR18	Longitudinal parity (XOR) of words 1-221
Imager Preclamp Statistics		
223–252	TSSDOH*	(2 x 15) Total sample size TSSDOH_P0 - P14. GOES O-P 8th IR det @ block#7 wd#231
253–282	FSSDOH*	(2 x 15) Filtered sample size FSSDOH_P0 - P14. GOES O-P 8th IR det @ block#7 wd#233
283–312	UMINDOH*	(2 x 15) Unfiltered minimum value – counts UMINDOH_P0 - P14. GOES O-P 8th IR det @ block#7 wd#235
313–342	FMINDOH*	(2 x 15) Filtered minimum value – counts FMINDOH_P0 - P14. GOES O-P 8th IR det @ block#7 wd#237
343–372	UMXDOH*	(2 x 15) Unfiltered maximum value – counts UMXDOH_P0 - P14. GOES O-P 8th IR det @ block#7 wd#239
373–402	FMXDOH*	(2 x 15) Filtered maximum value – counts FMXDOH_P0 - P14. GOES O-P 8th IR det @ block#7 wd#241
403–462	UMNDOH*	(4 x 15) Unfiltered mean value – counts UMNDOH_P0 - P14. GOES O-P 8th IR det @ block#7 wd#243
463–522	FMNDOH*	(4 x 15) Filtered mean value – counts FMNDOH_P0 - P14. GOES O-P 8th IR det @ block#7 wd#247
523–582	USDDOH*	(4 x 15) Unfiltered σ – counts USDDOH_P0 - P14. GOES O-P 8th IR det @ block#7 wd#251
583–642	FSCDOH*	(4 x 15) Filtered σ – counts FSCDOH_P0 - P14. GOES O-P 8th IR det @ block#7 wd#255
643–670	FSRDOH*	(4 x 7) Filtered σ – radiance (IR only) FSRDOH_P0 - P6. GOES O-P 8th IR det @ block#7 wd#259

Block 1 Words	Name	Description
671–698	FSTDOH*	(4 x 7) Filtered σ – temperature (IR only) FSTDOH_P7 - P13. GOES O-P 8th IR det @ block#7 wd#263
699–701		Spares – not used
702	PXOR19	Longitudinal parity (XOR) of words 223-701
Imager Postclamp Statistics		
703–732	TSSODD*	(2 x 15) Total sample size TSSODD_P0 - P14. GOES O-P 8th IR det @ block#7 wd#267
733–762	FSSODD*	(2 x 15) Filtered sample size FSSODD_P0 - P14. GOES O-P 8th IR det @ block#7 wd#269
763–792	UMINODD*	(2 x 15) Unfiltered minimum value – counts UMINODD_P0 - P14. GOES O-P 8th IR det @ block#7 wd#271
793–822	FMINODD*	(2 x 15) Filtered minimum value – counts FMINODD_P0 - P14. GOES O-P 8th IR det @ block#7 wd#273
823–852	UMXODD*	(2 x 15) Unfiltered maximum value – counts UMXODD_P0 - P14. GOES O-P 8th IR det @ block#7 wd#275
853–882	FMXODD*	(2 x 15) Filtered maximum value – counts FMXODD_P0 - P14. GOES O-P 8th IR det @ block#7 wd#277
883–942	UMNODD*	(4 x 15) Unfiltered mean value – counts UMNODD_P0 - P14. GOES O-P 8th IR det @ block#7 wd#279
943–1002	FMNODD*	(4 x 15) Filtered mean value – counts FMNODD_P0 - P14. GOES O-P 8th IR det @ block#7 wd#283
1003–1062	USDODD*	(4 x 15) Unfiltered σ – counts USDODD _P0 - P14. GOES O-P 8th IR det @ block#7 wd#287
1063–1122	FSCODD*	(4 x 15) Filtered σ – counts FSCODD_P0 - P14. GOES O-P 8th IR det @ block#7 wd#291
1123–1150	FSRODD*	(4 x 7) Filtered σ – radiance (IR only) FSRODD _P0 - P6. GOES O-P 8th IR det @ block#7 wd#295
1151–1178	FSTODD*	(4 x 7) Filtered σ – temperature (IR only) FSTODD _P7 - P13. GOES O-P 8th IR det @ block#7 wd#299
1179–1181		Spares – not used
1182	PXOR20	Longitudinal parity (XOR) of words 703–1181
Imager Accrued IR Activity		
1183–1662	IDPRM1	(4 x 120) IR detector 1 preclamp filtered mean – counts
1663–2142	IDPRM2	(4 x 120) IR detector 2 preclamp filtered mean – counts
2143–2622	IDPRM3	(4 x 120) IR detector 3 preclamp filtered mean – counts
2623–3102	IDPRM4	(4 x 120) IR detector 4 preclamp filtered mean – counts
3103–3582	IDPRM5	(4 x 120) IR detector 5 preclamp filtered mean – counts
3583–4062	IDPRM6	(4 x 120) IR detector 6 preclamp filtered mean – counts
4063–4542	IDPRM7	(4 x 120) IR detector 7 preclamp filtered mean – counts. GOES O-P 8th IR det @ block#7 wd#303
4543–5022	IDPOM1	(4 x 120) IR detector 1 postclamp filtered mean – counts
5023–5502	IDPOM2	(4 x 120) IR detector 2 postclamp filtered mean – counts
5503–5982	IDPOM3	(4 x 120) IR detector 3 postclamp filtered mean – counts
5983–6462	IDPOM4	(4 x 120) IR detector 4 postclamp filtered mean – counts
6463–6942	IDPOM5	(4 x 120) IR detector 5 postclamp filtered mean – counts
6943–7422	IDPOM6	(4 x 120) IR detector 6 postclamp filtered mean – counts
7423–7902	IDPOM7	(4 x 120) IR detector 7 postclamp filtered mean – counts GOES O-P 8th IR det @ block#7 wd#783

Block 1 Words	Name	Description
7903–7905		Spares – not used
7906	PXOR21	Longitudinal parity (XOR) of words 1183–7902
7907–8040		Spares – not used

Block 2 Words	Name	Description
1–30	**	**SAD ID (see Section 3.3.7.1)
31–221		Spares – not used
222	PXOR22	Longitudinal parity (XOR) of words 1–221
Imager Accrued IR Activity		
223–702	IDPRS1	(4 x 120) IR detector 1 preclamp filtered σ – counts
703–1182	IDPRS2	(4 x 120) IR detector 2 preclamp filtered σ – counts
1183–1662	IDPRS3	(4 x 120) IR detector 3 preclamp filtered σ – counts
1663–2142	IDPRS4	(4 x 120) IR detector 4 preclamp filtered σ – counts
2143–2622	IDPRS5	(4 x 120) IR detector 5 preclamp filtered σ – counts
2623–3102	IDPRS6	(4 x 120) IR detector 6 preclamp filtered σ – counts
3103–3582	IDPRS7	(4 x 120) IR detector 7 preclamp filtered σ – counts GOES O-P 8th IR det @ block#7 wd#1263
3583–4062	IDPOS1	(4 x 120) IR detector 1 postclamp filtered σ – counts
4063–4542	IDPOS2	(4 x 120) IR detector 2 postclamp filtered σ – counts
4543–5022	IDPOS3	(4 x 120) IR detector 3 postclamp filtered σ – counts
5023–5502	IDPOS4	(4 x 120) IR detector 4 postclamp filtered σ – counts
5503–5982	IDPOS5	(4 x 120) IR detector 5 postclamp filtered σ – counts
5983–6462	IDPOS6	(4 x 120) IR detector 6 postclamp filtered σ – counts
6463–6942	IDPOS7	(4 x 120) IR detector 7 postclamp filtered σ – counts GOES O-P 8th IR det @ block#7 wd#1743
6943–6945		Spares – not used
6946	PXOR23	Longitudinal parity (XOR) of words 223–6942
6947–8040		Spares – not used

Block 3 Words	Name	Description
1–30	**	**SAD ID (see Section 3.3.7.1)
31–221		Spares – not used
222	PXOR24	Longitudinal parity (XOR) of words 1–221
223–462	IDPRP1	(2 x 120) IR 1 preclamp filtered point count
463–702	IDPRP2	(2 x 120) IR 2 preclamp filtered point count
703–942	IDPRP3	(2 x 120) IR 3 preclamp filtered point count
943–1182	IDPRP4	(2 x 120) IR 4 preclamp filtered point count
1183–1422	IDPRP5	(2 x 120) IR 5 preclamp filtered point count
1423–1662	IDPRP6	(2 x 120) IR 6 preclamp filtered point count
1663–1902	IDPRP7	(2 x 120) IR 7 preclamp filtered point count GOES O-P 8th IR det @ block#7 wd#2223
1903–2142	IDPOP1	(2 x 120) IR 1 postclamp filtered point count
2143–2382	IDPOP2	(2 x 120) IR 2 postclamp filtered point count
2383–2622	IDPOP3	(2 x 120) IR 3 postclamp filtered point count
2623–2862	IDPOP4	(2 x 120) IR 4 postclamp filtered point count

Block 3 Words	Name	Description
2863–3102	IDPOP5	(2 x 120) IR 5 postclamp filtered point count
3103–3342	IDPOP6	(2 x 120) IR 6 postclamp filtered point count
3343–3582	IDPOP7	(2 x 120) IR 7 postclamp filtered point count GOES O-P 8th IR det @ block#7 wd#2463
3583–3822	PRCET	(2 x 120) preclamp event times
3823–4062	POCET	(2 x 120) postclamp event times
4063–4542	CMASFI*	(4 x 120) clamp mode and status flags Note: Status flags for 8th IR detector are in Block 7 words 2703-2822. CMASFI_MODE CMASFI_P0 – P19
4543	TOONCE	Number of clamp events (1–120)
4544–4545		Spares – not used
4546	PXOR25	Longitudinal parity (XOR) of words 223–4545
Imager IR Preclamp Raw Data Values		
4547–5346	IDPRR1	(2 x 400) IR detector 1 – counts
5347–6146	IDPRR2	(2 x 400) IR detector 2 – counts
6147–6946	IDPRR3	(2 x 400) IR detector 3 – counts
6947–7746	IDPRR4	(2 x 400) IR detector 4 – counts
7747–8040		Spares – not used

Block 4 Words	Name	Description
1–30	**	**SAD ID (see Section 3.3.7.1)
31–221		Spares – not used
222	PXOR26	Longitudinal parity (XOR) of words 1–221
Imager IR Preclamp Raw Data Values		
223–1022	IDPRR5	(2 x 400) IR detector 5 – counts
1023–1822	IDPRR6	(2 x 400) IR detector 6 – counts
1823–2622	IDPRR7	(2 x 400) IR detector 7 – counts GOES O-P 8th IR det @ block#7 wd#2823
Imager IR Postclamp Raw Data Values		
2623–3422	IDPOR1	(2 x 400) IR detector 1 – counts
3423–4222	IDPOR2	(2 x 400) IR detector 2 – counts
4223–5022	IDPOR3	(2 x 400) IR detector 3 – counts
5023–5822	IDPOR4	(2 x 400) IR detector 4 – counts
5823–6622	IDPOR5	(2 x 400) IR detector 5 – counts
6623–7422	IDPOR6	(2 x 400) IR detector 6 – counts
7423–8040		Spares – not used

Block 5 Words	Name	Description
1–30	**	**SAD ID (see Section 3.3.7.1)
31–221		Spares – not used
222	PXOR27	Longitudinal parity (XOR) of words 1–221
Imager IR Postclamp Raw Data Values		
223–1022	IDPOR7	(2 x 400) IR detector 7 – counts GOES O-P 8th IR det @ block#7 wd#3623
Imager Visible Preclamp Data Values		
1023–1822	VDPRR1	(2 x 400) Visible detector 1 – counts
1823–2622	VDPRR2	(2 x 400) Visible detector 2 – counts
2623–3422	VDPRR3	(2 x 400) Visible detector 3 – counts
3423–4222	VDPRR4	(2 x 400) Visible detector 4 – counts
4223–5022	VDPRR5	(2 x 400) Visible detector 5 – counts
5023–5822	VDPRR6	(2 x 400) Visible detector 6 – counts
5823–6622	VDPRR7	(2 x 400) Visible detector 7 – counts
6623–7422	VDPRR8	(2 x 400) Visible detector 8 – counts
7423–8040		Spares – not used

Block 6 Words	Name	Description
1–30	**	**SAD ID (see Section 3.3.7.1)
31–221		Spares – not used
222	PXOR28	Longitudinal parity (XOR) of words 1–221
Imager Visible Postclamp Data Values		
223–1022	VDPOR1	(2 x 400) Visible detector 1 – counts
1023–1822	VDPOR2	(2 x 400) Visible detector 2 – counts
1823–2622	VDPOR3	(2 x 400) Visible detector 3 – counts
2623–3422	VDPOR4	(2 x 400) Visible detector 4 – counts
3423–4222	VDPOR5	(2 x 400) Visible detector 5 – counts
4223–5022	VDPOR6	(2 x 400) Visible detector 6 – counts
5023–5822	VDPOR7	(2 x 400) Visible detector 7 – counts
5823–6622	VDPOR8	(2 x 400) Visible detector 8 – counts
6623–8040		Spares – not used

Block 7 Words	Name	Description
Block 7 is used for GOES-O and Beyond.		
1-30	**	**SAD ID (see Section 3.3.7.1)
31-221		SPARE
222-222	PXOR63	Longitudinal parity for words 1-221
223-224	SLWFI*	(2 x 1) Spacelook warning flags for 8th IR detector (see Table 3-25). See Block 1, words 55-84 for warning flags for other detectors. SLWFI_P7_P# where # = 0 - 8
225-226	PCWFI*	(2 x 1) Preclamp warning flags for 8th IR detector (see notes). See Block 1, words 85-114 for warning flags for other detectors. PCWFI _P7_P# where # = 0 - 8
227-227	SLCAFI*	Spacelook critical alarm flags for 8th IR detector (see notes). See Block 1, words 115-117 for critical alarm flags for other detectors. SLCAFI_P22 - P23
228–230		Spares – not used

Block 7 Words	Name	Description
Imager Preclamp Statistics for 8th IR Detector		
231-232	TSSDOH_P15	(2 x 1) Total sample size. GOES I-N IR dets 1-7 block#1 wd#223
233-234	FSSDOH_P15	(2 x 1) Filtered sample size. GOES I-N IR dets 1-7 block#1 wd#253
235-236	UMINDOH_P15	(2 x 1) Unfiltered minimum value – counts. GOES I-N IR dets 1-7 block#1 wd#283
237-238	FMINDOH_P15	(2 x 1) Filtered minimum value – counts. GOES I-N IR dets 1-7 block#1 wd#313
239-240	UMXDOH_P15	(2 x 1) Unfiltered maximum value – counts. GOES I-N IR dets 1-7 block#1 wd#343
241-242	FMXDOH_P15	(2 x 1) Filtered maximum value – counts. GOES I-N IR dets 1-7 block#1 wd#373
243-246	UMNDOH_P15	(4 x 1) Unfiltered mean value – counts. GOES I-N IR dets 1-7 block#1 wd#403
247-250	FMNDOH_P15	(4 x 1) Filtered mean value – counts. GOES I-N IR dets 1-7 block#1 wd#463
251-254	USDDOH_P15	(4 x 1) Unfiltered σ – counts. GOES I-N IR dets 1-7 block#1 wd#523
255-258	FSCDOH_P15	(4 x 1) Filtered σ – counts. GOES I-N IR dets 1-7 block#1 wd#583
259-262	FSRDOH_P7	(4 x 1) Filtered σ – radiance. GOES I-N IR dets 1-7 block#1 wd#643
263-266	FSTDOH_P14	(4 x 1) Filtered σ – temperature. GOES I-N IR dets 1-7 block#1 wd#671
Imager Postclamp Statistics for8th IR Detector		
267-268	TSSODD_P15	(2 x 1) Total sample size. GOES I-N IR dets 1-7 block#1 wd#703
269-270	FSSODD_P15	(2 x 1) Filtered sample size. GOES I-N IR dets 1-7 block#1 wd#733
271-272	UMINODD_P15	(2 x 1) Unfiltered minimum value – counts. GOES I-N IR dets 1-7 block#1 wd#763
273-274	FMINODD_P15	(2 x 1) Filtered minimum value – counts. GOES I-N IR dets 1-7 block#1 wd#793
275-276	UMXODD_P15	(2 x 1) Unfiltered maximum value – counts. GOES I-N IR dets 1-7 block#1 wd#823
277-278	FMXODD_P15	(2 x 1) Filtered maximum value – counts. GOES I-N IR dets 1-7 block#1 wd#853
279-282	UMNODD_P15	(4 x 1) Unfiltered mean value – counts. GOES I-N IR dets 1-7 block#1 wd#883
283-286	FMNODD_P15	(4 x 1) Filtered mean value – counts. GOES I-N IR dets 1-7 block#1 wd#943
287-290	USDODD_P15	(4 x 1) Unfiltered σ – counts. GOES I-N IR dets 1-7 block#1 wd#1003
291-294	FSCODD_P15	(4 x 1) Filtered σ – counts. GOES I-N IR dets 1-7 block#1 wd#1063
295-298	FSRODD_P7	(4 x 1) Filtered σ – radiance. GOES I-N IR dets 1-7 block#1 wd#1123
299-302	FSTODD_P14	(4 x 1) Filtered σ – temperature. GOES I-N IR dets 1-7 block#1 wd#1151
Imager Accrued IR Activity for 8th IR Detector		
303-782	IDPRM8	(4 x 120) 8 th IR detector preclamp filtered mean – counts. GOES I-N IR dets 1-7 block#1 wd#1183
783-1262	IDPOM8	(4 x 120) 8th IR detector postclamp filtered mean – counts. GOES I-N IR dets 1-7 block#1 wd#4543
1263-1742	IDPRS8	(4 x 120) 8th IR detector preclamp filtered σ – counts GOES I-N IR dets 1-7 block#2 wd#223
1743-2222	IDPOS8	(4 x 120) 8th IR detector postclamp filtered σ – counts. GOES I-N IR dets 1-7 block#2 wd#3583

Block 7 Words	Name	Description
2223-2462	IDPRP8	(2 x 120) 8th IR preclamp filtered point count. GOES I-N IR dets 1-7 block#3 wd#223
2463-2702	IDPOP8	(2 x 120) 8th IR postclamp filtered point count. GOES I-N IR dets 1-7 block#3 wd#1903
2703-2822	CMASFI*	(1 x 120) Clamp Status Flags for 8th IR detector. CMASFI_P20 – P21 Flags for other detectors are in Block 3 words 4063-4542. Meaning of flags is as follows: **Bit** **True Condition** 00 Unassigned (always zero) 01 invalid calibration condition for 8th IR detector (channel 6 det 2) (no statistics) 02 excessive drift rate alarm for 8th IR detector (channel 6 det 2) 03-07 Unassigned (always zero)
Imager Raw Counts for 8th IR Detector		
2823-3622	IDPRR8	(2 x 400) 8th IR detector preclamp – counts. GOES I-N IR dets 1-7 block#3 wd#4547
3623-4422	IDPOR8	(2 x 400) 8th IR detector postclamp – counts. GOES I-N IR dets 1-7 block#4 wd#2623
4423-8040		Spares – not used

Notes:

1. Warning flags for pre-clamp data, Block 1 words 85 – 114, and Block 7 words 225-226, are parallel to the spacelook definitions provided in Table 3-23.
2. Critical Alarm flags, Block 1 words 115 – 117, and Block 7 word 227 are duplicated from Table 3-30, words 57 – 59, and word 7411 to simplify message logic in the PMs.
3. The event times provided in Block 3 (see words 3583 – 4062) are 16-bit positive integers having units of 10 msec (a value of 23 denotes 230 msec). The time denotes the interval from the preceding 2-minute mark of the preclamp or postclamp.
4. The clamp mode and status flags listed in Block 3, words 4063–4542, are defined the same as the scan documentation Block 0, words 5967–5970 and 6231–6234 (see Table 3-6).
5. With four exceptions, all Block 1 statistics arrays are 15 entries in length. The first seven entries in each of these arrays are sequentially assigned to the first seven active IR detectors. The last eight entries of each array are assigned to the eight visible detectors. The four exceptions are each seven entries in length, with each entry sequentially assigned to the first seven IR detectors. Starting with GOES-O, there is an 8th IR detector, and its statistics appear in the new Block 7.
6. Arrays sized as 2 x *N* whose units are in counts contain a right-adjusted 10-bit value. The most significant 6 bits of each two-word entry are zeroes. Arrays sized as 4 x *N* are floating point value arrays, each entry occupying four sequential words.

Table 3-25. Imager Spacelook and Blackbody Warning Flag Definitions

Words	Description
55–56, Block 1	IR detector 1 warning flags
57–58, Block 1	IR detector 2 warning flags
59–60, Block 1	IR detector 3 warning flags
61–62, Block 1	IR detector 4 warning flags
63–64, Block 1	IR detector 5 warning flags
65–66, Block 1	IR detector 6 warning flags
67–68, Block 1	IR detector 7 warning flags
69–70, Block 1	Visible detector 1 warning flags
71–72, Block 1	Visible detector 2 warning flags
73–74, Block 1	Visible detector 3 warning flags
75–76, Block 1	Visible detector 4 warning flags
77–78, Block 1	Visible detector 5 warning flags
79–80, Block 1	Visible detector 6 warning flags
81–82, Block 1	Visible detector 7 warning flags
83–84, Block 1	Visible detector 8 warning flags
223-224, Block 7 for Spacelook blk and Block 3 for Blackbody blk	IR detector 8 warning flags

Notes:

1. Visible detector flag, words 69-84 are used only for spacelook calibration.
2. Each of the two-word structures has 16 bits numbered 1-16, where bit 1 is the MSB of the first word and bit 16 is the LSB of the second word. Each flag bit is set to one if the associated condition is true; otherwise, the flag is zero. Warning flags are defined as follows:

Flag	Set True (1) For Condition
1	Unassigned (always 0)
2	Unassigned (always 0)
3	Unassigned (always 0)
4	Unassigned (always 0)
5	Unassigned (always 0)
6	Unassigned (always 0)
7	Filtered sample size too small
8	Unfiltered mean value (counts) below low limit
9	Filtered mean value (counts) below low limit
10	Unfiltered mean value (counts) exceeds high limit
11	Filtered mean value (counts) exceeds high limit
12	Unfiltered σ value (counts) exceeds limit
13	Filtered σ value (counts) exceeds limit
14	Unassigned (always 0)
15	Filtered IR σ value (radiance) exceeds limit
16	Filtered IR σ value (temperature) exceeds limit

3. Flags 15 and 16 are not applicable for the visible detectors.

The Sounder performs a spacelook calibration sequence at a fixed nominal rate every 2 minutes. During a Sounder spacelook calibration, 40 raw Sounder data blocks are acquired at the spacelook coordinates. Unlike the Imager, the Sounder has no defined preclamp or clamp activity. Each raw Sounder data block yields a single spacelook sample for each of the 76 CDET.

A data analysis is also performed for the Sounder spacelook data. The resulting statistics, warning flags, and raw data are packaged in five Sounder Block 11 formats, described in Table 3-26; and, the associated warning flags are defined in Table 3-27.

Table 3-26. Sounder Spacelook Block 11 Format

Block 1 Words	Name	Description
1-30	**	**SAD ID (see Section 3.3.7.1)
31–38	TTFSDS	CDA time tag of first spacelook data block
39–46	DODAD	CDA time of current limits set
47–48	PRSPLN	Prespacelook scan position line number
49–50	PRSPPN	Prespacelook scan position pixel number
51–52	SLSPLN	Spacelook scan position line number
53–54	SLSPPN	Spacelook scan position pixel number
55–206	SLWFS*	(2 x 76) Spacelook warning flags (see Table 3-27) SLWFS_P#_P## where # = 0 - 71, and where ## = 0 - 8 SLWFS_P#_P## where # = 72 - 75, and ## = 0 - 6
207–216	SLCAFS*	Spacelook Critical Alarm flags (see notes) SLCAFS_P# where # = 0 - 75
217–219		Spares – not used
220	SALSA	Spacelook side active: 0 = West, 255 = East
221	CURSES	Electronics Side active: 0 = Side 1, 255 = Side 2
222	PXOR29	Longitudinal parity (XOR) of words 1–221
Sounder Spacelook Statistics		
223–374	SAMMY*	(2 x 76) Total sample size SAMMY_P# where # = 0 - 75
375–526	SIBBY*	(2 x 76) Filtered sample size SIBBY_P# where # = 0 - 75
527–678	UFMNV*	(2 x 76) Unfiltered minimum value – counts UFMNV_P# where # = 0 - 75
679–830	FMNV*	(2 x 76) Filtered minimum value – counts FMNV_P# where # = 0 - 75
831–982	UFMXV*	(2 x 76) Unfiltered maximum value – counts UFMXV_P# where # = 0 - 75
983–1134	FMXV*	(2 x 76) Filtered maximum value – counts FMXV_P# where # = 0 - 75
1135–1438	UFMEV*	(4 x 76) Unfiltered mean value – counts UFMEV_P# where # = 0 - 75
1439–1742	FMEV*	(4 x 76) Filtered mean value – counts FMEV_P# where # = 0 - 75
1743–2046	UFSDV*	(4 x 76) Unfiltered σ – counts UFSDV_P# where # = 0 - 75
2047–2350	FSDV*	(4 x 76) Filtered σ– counts FSDV_P# where # = 0 - 75
2351–2638	FSRV*	(4 x 72) Filtered σ – radiance (IR only) FSRV_P# where # = 0 - 71
2639–2926	FSTV*	(4 x 72) Filtered σ – temperature (IR only) FSTV_P# where # = 0 - 71

Block 1 Words	Name	Description
2927	PXOR30	Longitudinal parity (XOR) of words 223–2926
2928–8040		Spares – not used
Block 2 Words	**Name**	**Description**
1–30	**	**SAD ID (Section 3.3.7.1)
Sounder Raw Data Records		
31–574	SLDAB1*	Spacelook data block 1
575–1118	SLDAB2*	Spacelook data block 2
1119–1662	SLDAB3*	Spacelook data block 3
1663–2206	SLDAB4*	Spacelook data block 4
2207–2750	SLDAB5*	Spacelook data block 5
2751–3294	SLDAB6*	Spacelook data block 6
3295–3838	SLDAB7*	Spacelook data block 7
3839–4382	SLDAB8*	Spacelook data block 8
4383–4926	SLDAB9*	Spacelook data block 9
4927–5470	SLDAB10*	Spacelook data block 10
5471–6014	SLDAB11*	Spacelook data block 11
6015–8040		Spares – not used
Block 3, [4] Words	**Name**	**Description**
1–30	**	**SAD ID (see Section 3.3.7.1)
Sounder Raw Data Records		
31–574	SLDAB12*	Spacelook data block 12, [23]
575–1118	SLDAB13*	Spacelook data block 13, [24]
1119–1662	SLDAB14*	Spacelook data block 14, [25]
1663–2206	SLDAB15*	Spacelook data block 15, [26]
2207–2750	SLDAB16*	Spacelook data block 16, [27]
2751–3294	SLDAB17*	Spacelook data block 17, [28]
3295–3838	SDAB18*	Spacelook data block 18, [29]
3839–4382	SLDAB19*	Spacelook data block 19, [30]
4383–4926	SLDAB20*	Spacelook data block 20, [31]
4927–5470	SLDAB21*	Spacelook data block 21, [32]
5471–6014	SLDAB22*	Spacelook data block 22, [33]
6015–8040		Spares – not used
Block 5 Words	**Name**	**Description**
1–30	**	**SAD ID (see Section 3.3.7.1)
Sounder Raw Data Records		
31–574	SLDAB34*	Spacelook data block 34
575–1118	SLDAB35*	Spacelook data block 35
1119–1662	SLDAB36*	Spacelook data block 36
1663–2206	SLDAB37*	Spacelook data block 37
2207–2750	SLDAB38*	Spacelook data block 38
2751–3294	SLDAB39*	Spacelook data block 39
3295–3838	SLDAB40*	Spacelook data block 40
3039–8040		Spares – not used

Notes:

1. Spacelook critical alarm flags, Block 1, words 207–216, are duplicates of Table 3-31, words 63 – 72. The alarm flags are provided here to simplify the message logic in the PMs.
2. All arrays sized 2 x 76 in the statistics section of Block 1 contain positive integer values, right-adjusted and zero-filled. The 4 x *N* arrays contain floating point values.
3. Blocks 3 and 4 have the same format. The Block 4 contents are indicated by the numbers in brackets.
4. The format of the raw data spacelook records, 1 – 40, contained in the second through fifth Block 11s is defined in Table 3-11.

Table 3-27. Sounder Spacelook and Blackbody Warning Flag Definitions

Words	Description
55–56	Channel 1 detector 1 warning flags
57–58	Channel 1 detector 2 warning flags
59–60	Channel 1 detector 3 warning flags
61–62	Channel 1 detector 4 warning flags
63–70	Channel 2 detector 1 – 4 warning flags
71–78	Channel 3 detector 1 – 4 warning flags
79–86	Channel 4 detector 1 – 4 warning flags
87–94	Channel 5 detector 1 – 4 warning flags
95–102	Channel 6 detector 1 – 4 warning flags
103–110	Channel 7 detector 1 – 4 warning flags
111–118	Channel 8 detector 1 – 4 warning flags
119–126	Channel 9 detector 1 – 4 warning flags
127–206	Channels 10 – 19 detector 1 – 4 warning flags

Notes:

1. Each of the 76, two-word structures above, has 16-flag bits numbered 1-16, where bit 1 is the MSB of the first word and bit 16 is the LSB of the second. Each flag bit is set to one if the associated condition is true. Warning flags are defines as follows:

Flag	Set True (1) For Condition
1	Unassigned (always 0)
2	Unassigned (always 0)
3	Unassigned (always 0)
4	Unassigned (always 0)
5	Unassigned (always 0)
6	Unassigned (always 0)
7	Filtered sample size too small
8	Unfiltered mean value (counts) below low limit
9	Filtered mean value (counts) below low limit
10	Unfiltered mean value (counts) exceeds high limit
11	Filtered mean value (counts) exceeds high limit
12	Unfiltered σ value (counts) exceeds limit
13	Filtered σ value (counts) exceeds limit
14	Unassigned (always 0)
15	Filtered IR σ value (radiance) exceeds limit
16	Filtered IR σ value (temperature) exceeds limit

2. Flags 15 and 16 are not applicable for the four channel 19 visible detectors, words 199-206, during a spacelook report. During a BB report, none of the visible detector flags apply and words 199-206 will always be zero.

3.3.7.8 Blackbody Calibration Statistics and Data

A BB-Cal sequence is initiated every 30 minutes for the Imager and every 20 minutes for the Sounder. During a BB-Cal sequence, the scanning mirror is rotated in the N-S direction through an angle of approximately 180 mechanical degrees to present a view of the BB surface to the imaging detectors. The BB surface is actively maintained in thermal equilibrium at a nominal temperature of 290° Kelvin. The surface is instrumented with eight, temperature-measuring thermistors. The purpose in viewing a known, relatively high temperature scene is to provide a means of computing the first-order gain coefficients associated with the IR detectors.

Once the scanning mirror has settled on the blackbody, for GOES I-M, the Imager dwells for 2 milliseconds, generating slightly more than 1000 raw data blocks of imaging data. The first 1000 are used, providing 1000 pixels for each IR detector. The analysis proceeds in the same fashion described for the spacelook data analysis. Minimum, maximum, mean, and standard deviation of the BB values, both filtered and unfiltered, are computed for each IR detector. In addition, warning flags are generated if predefined limits for the various statistics are exceeded. The resulting statistics, warning flags, and raw data are packaged into two Block 11s for inclusion in the GVAR data stream. Table 3-28 provides the Block 11 format definitions employed. The warning flags for the Imager BB-Cal are defined in Table 3-25.

For GOES N-P, the Imager blackbody dwell period is extended to 2 seconds, resulting in over 10,000 raw data blocks (up to an instrument maximum of 11,003) and the same number of pixels per detector. A subset of these pixels is used to calculate the statistics as above. Words 143-146 in the first Imager Blackbody Block 11 (Table 3-28) define the first pixel used. Words 147-150 define how many pixels are used in a sequence beginning with the first pixel. By default, all pixels in a dwell will be used, but GOES operations can choose to use a subset if this provides more accuracy. The Imager Blackbody block 11 only provides space for 1,000 raw pixels per detector, so a limited selection of the 10,000-plus raw pixels per detector will be recorded here (sent in Block 1 words 1075-7874, and Block 2 words 223-7422, and starting with GOES-O, block 3 words 351-2350). The selection provided in GVAR is defined by Words 151-158. Words 151-154 define the first sample recorded. Words 155-158 define a sample interval. The default of 0 and 10 for these values means "The very first sample, and every 10th after that, until 1,000 samples are recorded". For GOES O-P, in addition to the longer Blackbody (BB) scan in GOES N, there is also an additional IR detector. The data for the 8th detector is found in the third Imager Blackbody Block 11, which is only transmitted in GVAR for GOES O-P.

During a Sounder BB-Cal, 40 raw Sounder data blocks are acquired after the scanning mirror has settled on the BB scene. Each raw Sounder data block yields a single BB sample for each of the 72 IR CDET.

A data analysis similar to that performed for the Imager BB data is provided for the Sounder data. The resulting statistics, warning flags, and raw data, are packaged in Block 11 formats for inclusion in the GVAR output data stream. The formats employed for the five Block 11s used to transport the

Sounder BB information are delineated in Table 3-27. The warning flags employed for a Sounder BB are defined in Table 3-25.

Table 3-28. Imager Blackbody Block 11 Format

Words	Name	Description
1–30	**	**SAD ID (see Section 3.3.7.1)
31–38	FTTBHBI	CDA formatted time tag of BB header block
39–46	TCLSBI	CDA time of current limits set
47–48	PBSPLNI	Preblackbody scan position line number
49–50	PBSPPNI	Preblackbody scan position pixel number
51–52	BSPSCNI	BB scan position scan count number
53–54	BSPPXNI	BB scan position pixel number
55–68	BBWFI*	(2 x 7) BB warning flags (see Table 3-25) BBWFI_P#_P where # = 0 - 6 BBWFI_P#_P0 - P8 where # = 0 - 6 GOES O-P 8th IR det @ block#3 wd#223
69–114		Spares – not used
115–117	BBCAFI*	BB critical alarm flags (see notes) BBCAFI_P0 – P13 GOES O-P 8th IR det @ block#7 wd#225
118		Spare–not used
119–126	TPRBPOC	CDA time of preblackbody postclamp data
127–134	TBBD	CDA time of BB data
135–142	TPOBBSV	CDA time of postblackbody spacelook data
143-146	CALSELECT_0	Selector for BB Cal computations – Starting sample number (0 = 1st sample) GOES I-M: value fixed at 0 GOES N-P: default value is 0
147-150	CALSELECT_1	Selector for BB Cal computations – Number of samples used GOES I-M: value fixed at 1000 GOES N-P: default is all (>10,000)
151-154	OUTSELECT_0	Selector for raw data in GVAR (words 1075-7874 in this block and in block 2 and block 3 below.) and in archive - First sample recorded GOES I-M: value fixed at 0 GOES N-P: default value is 0
155-158	OUTSELECT_1	Selector for raw data in GVAR (words 1075-7874 in this block and in block 2 words and block 3 words below.) and in archive - Sampling interval GOES I-M: value fixed at 1 GOES N-P: default value is 10
159–220		Spares – not used
221	HMMNOT	Electronics side active: 0 = Side 1, 255 = Side 2
222	PXOR31	Longitudinal parity (XOR) of words 1–221
Imager Pre BB Postclamp Statistics		
223–236	TSSPRB*	(2 x 7) Total sample size TSSPRB_P0 - P6 GOES O-P 8th IR det @ block#3 wd#231
237–250	FSSPRB*	(2 x 7) Filtered sample size FSSPRB_P0 - P6 GOES O-P 8th IR det @ block#3 wd#233
251–264	UMINPRB*	(2 x 7) Unfiltered minimum value – counts UMINPRB_P0 - P6 GOES O-P 8th IR det @ block#3 wd#235

Imager Pre BB Postclamp Statistics (Cont.)		
Words	**Name**	**Description**
265–278	FMINPRB*	(2 x 7) Filtered minimum value – counts FMINPRB_P0 - P6 GOES O-P 8th IR det @ block#3 wd#237
279–292	UMXPRB*	(2 x 7) Unfiltered maximum value – counts UMXPRB_P0 - P6 GOES O-P 8th IR det @ block#3 wd#239
293–306	FMXPRB*	(2 x 7) Filtered maximum value – counts FMXPRB_P0 - P6 GOES O-P 8th IR det @ block#3 wd#241
307–334	UMNPRB*	(4 x 7) Unfiltered mean value – counts UMNPRB_P0 - P6 GOES O-P 8th IR det @ block#3 wd#243
335–362	FMNPRB*	(4 x 7) Filtered mean value – counts FMNPRB_P0 - P6 GOES O-P 8th IR det @ block#3 wd#247
363–390	USDPRB*	(4 x 7) Unfiltered σ – counts USDPRB_P0 - P6 GOES O-P 8th IR det @ block#3 wd#251
391–418	FSCPRB*	(4 x 7) Filtered σ – counts FSCPRB_P0 - P6 GOES O-P 8th IR det @ block#3 wd#255
419–446	FSRPRB*	(4 x 7) Filtered σ – radiance FSRPRB_P0 - P6 GOES O-P 8th IR det @ block#3 wd#259
447–474	FSTPRB*	(4 x 7) Filtered σ – temperature FSTPRB_P7 - P13 GOES O-P 8th IR det @ block#3 wd#263
475–505		Spares – not used
506	PXOR32	Longitudinal parity (XOR) of words 223–505
Block 1 Words	**Name**	**Description**
Imager BB Statistics		
507–520	TSSBBS*	(2 x 7) Total sample size TSSBBS_P0 - P6 GOES O-P 8th IR det @ block#3 wd#271
521–534	FSSBBS*	(2 x 7) Filtered sample size FSSBBS_P0 - P6 GOES O-P 8th IR det @ block#3 wd#273
535–548	UMINBBS*	(2 x 7) Unfiltered minimum value – counts UMINBBS_P0 - P6 GOES O-P 8th IR det @ block#3 wd#275
549–562	FMINBBS*	(2 x 7) Filtered minimum value – counts FMINBBS_P0 – P6 GOES O-P 8th IR det @ block#3 wd#277
563–576	UMXBBS*	(2 x 7) Unfiltered maximum value – counts UMXBBS_P0 - P6 GOES O-P 8th IR det @ block#3 wd#279
577–590	FMXBBS*	(2 x 7) Filtered maximum value – counts FMXBBS_P0 - P6 GOES O-P 8th IR det @ block#3 wd#281

Imager BB Statistics (Cont.)		
Block 1 Words	**Name**	**Description**
591–618	UMNBBS*	(4 x 7) Unfiltered mean value – counts UMNBBS_P0 - P6 GOES O-P 8th IR det @ block#3 wd#283
619–646	FMNBBS*	(4 x 7) Filtered mean value – counts FMNBBS_P0 - P6 GOES O-P 8th IR det @ block#3 wd#287
647–674	USDBBS*	(4 x 7) Unfiltered σ – counts USDBBS_P0 - P6 GOES O-P 8th IR det @ block#3 wd#291
675–702	FSCBBS*	(4 x 7) Filtered σ – counts FSCBBS_P0 - P6 GOES O-P 8th IR det @ block#3 wd#295
703–730	FSRBBS*	(4 x 7) Filtered σ – radiance FSRBBS_P0 - P6 GOES O-P 8th IR det @ block#3 wd#299
731–758	FSTBBS*	(4 x 7) Filtered σ – temperature FSTBBS_P7 - P13 GOES O-P 8th IR det @ block#3 wd#303
759–786	IPSLBBS*	(4 x 7) Interpolated spacelevel at BB – counts IPSLBBS_P7 - P13 GOES O-P 8th IR det @ block#3 wd#307
787–789		Spares – not used
790	PXOR33	Longitudinal parity (XOR) of words 507–789
Imager Post BB Spacelook Statistics		
791–804	TSSPOB*	(2 x 7) Total sample size TSSPOB_P0 - P6 GOES O-P 8th IR det @ block#3 wd#315
805–818	FSSPOB*	(2 x 7) Filtered sample size FSSPOB_P0 - P6 GOES O-P 8th IR det @ block#3 wd#317
819–832	UMINPOB*	(2 x 7) Unfiltered minimum value – counts UMINPOB_P0 - P6 GOES O-P 8th IR det @ block#3 wd#319
833–846	FMINPOB*	(2 x 7) Filtered minimum value – counts FMINPOB_P0 - P6 GOES O-P 8th IR det @ block#3 wd#321
847–860	UMXPOB*	(2 x 7) Unfiltered maximum value – counts UMXPOB_P0 - P6 GOES O-P 8th IR det @ block#3 wd#323
861–874	FMXPOB*	(2 x 7) Filtered maximum value – counts FMXPOB_P0 - P6 GOES O-P 8th IR det @ block#3 wd#325
875–902	UMNPOB*	(4 x 7) Unfiltered mean value – counts UMNPOB_P0 - P6 GOES O-P 8th IR det @ block#3 wd#327
903–930	FMNPOB*	(4 x 7) Filtered mean value – counts FMNPOB_P0 - P6 GOES O-P 8th IR det @ block#3 wd#331

Imager Post BB Spacelook Statistics (Cont.)		
Block 1 Words	**Name**	**Description**
931–958	USDPOB*	(4 x 7) Unfiltered σ – counts USDPOB_P0 - P6 GOES O-P 8th IR det @ block#3 wd#335
959–986	FSCPOB*	(4 x 7) Filtered σ – counts FSCPOB_P0 - P6 GOES O-P 8th IR det @ block#3 wd#339
987–1014	FSRPOB*	(4 x 7) Filtered σ – radiance FSRPOB_P0 - P6 GOES O-P 8th IR det @ block#3 wd#343
1015–1042	FSTPOB*	(4 x 7) Filtered σ – temperature FSTPOB_P7 - P13 GOES O-P 8th IR det @ block#3 wd#347
1043–1073		Spares – not used
1074	PXOR34	Longitudinal parity (XOR) of words 791–1073
Imager BB Raw Data Values (see Imager Blackbody block 1 words 151-158 for data range)		
1075–3074	IRD1RDB	(2 x 1000) IR detector 1 raw data – counts
3075–5074	IRD2RDB	(2 x 1000) IR detector 2 raw data – counts
5075–7074	IRD3RDB	(2 x 1000) IR detector 3 raw data – counts
7075–7874	IRD4RDB1	(2 x 400) IR detector 4 raw data – counts
7875–8040		Spares – not used
Block 2 Words	**Name**	**Description**
1–30	**	**SAD ID (see Section 3.3.7.1)
31–221		Spares – not used
222	PXOR35	Longitudinal parity (XOR) of words 1–221
Imager BB Raw Data Values (see Imager Blackbody block 1 words 151-158 for data range)		
223–1422	IRD4RDB2	(2 x 600) IR detector 4 raw data – counts
1423–3422	IRD5RDB	(2 x 1000) IR detector 5 raw data – counts
3423–5422	IRD6RDB	(2 x 1000) IR detector 6 raw data – counts
5423–7422	IRD7RDB	(2 x 1000) IR detector 7 raw data – counts GOES O-P 8th IR det @ block#3 wd#351
7423–8040		Spares – not used
Block 3 Words	**Name**	**Description**
Block 3 Words are provided for GOES-O and Beyond.		
1-30	**	**SAD ID (see Section 3.3.7.1)
31-221		Spares – not used
222-222	PXOR35	Longitudinal parity (XOR) of words 1-221
223-224	BBWFI*	(2 x 1) BB warning flags for 8th IR detector (see Table 3-25) BBWFI_P7_P BBWFI_P7_P0 - P8 GOES I-N IR dets 1-7 block#1 wd#55-68
225-225	BBCAFI*	BB critical alarm flags (see notes) BBCAFI_P14 – P15 GOES I-N IR dets 1-7 block#1 wd#115-117
226-230		Spares – not used

Imager Pre BB Postclamp Statistics for 8th IR Detector		
Block 3 Words	**Name**	**Description**
231-232	TSSPRB_P7	(2 x 1) Total sample size. GOES I-N IR dets 1-7 block#1 wd#223
233-234	FSSPRB_P7	(2 x 1) Filtered sample size. GOES I-N IR dets 1-7 block#1 wd#237
235-236	UMINPRB_P7	(2 x 1) Unfiltered minimum value – counts. GOES I-N IR dets 1-7 block#1 wd#251
237-238	FMINPRB_P7	(2 x 1) Filtered minimum value – counts. GOES I-N IR dets 1-7 block#1 wd#265
239-240	UMXPRB_P7	(2 x 1) Unfiltered maximum value – counts. GOES I-N IR dets 1-7 block#1 wd#279
241-242	FMXPRB_P7	(2 x 1) Filtered maximum value – counts. GOES I-N IR dets 1-7 block#1 wd#293
243-246	UMNPRB_P7	(4 x 1) Unfiltered mean value – counts. GOES I-N IR dets 1-7 block#1 wd#307
247-250	FMNPRB_P7	(4 x 1) Filtered mean value – counts. GOES I-N IR dets 1-7 block#1 wd#335
251-254	USDPRB_P7	(4 x 1) Unfiltered σ – counts. GOES I-N IR dets 1-7 block#1 wd#363
255-258	FSCPRB_P7	(4 x 1) Filtered σ – counts. GOES I-N IR dets 1-7 block#1 wd#391
259-262	FSRPRB_P7	(4 x 1) Filtered σ – radiance. GOES I-N IR dets 1-7 block#1 wd#419
263-266	FSTPRB_P14	(4 x 1) Filtered σ – temperature. GOES I-N IR dets 1-7 block#1 wd#447
267-270		Spares – not used
271-272	TSSBBS_P7	(2 x 1) Total sample size. GOES I-N IR dets 1-7 block#1 wd#507
273-274	FSSBBS_P7	(2 x 1) Filtered sample size. GOES I-N IR dets 1-7 block#1 wd#521
275-276	UMINBBS_P7	(2 x 1) Unfiltered minimum value – counts. GOES I-N IR dets 1-7 block#1 wd#535
277-278	FMINBBS_P7	(2 x 1) Filtered minimum value – counts. GOES I-N IR dets 1-7 block#1 wd#549
279-280	UMXBBS_P7	(2 x 1) Unfiltered maximum value – counts. GOES I-N IR dets 1-7 block#1 wd#563
281-282	FMXBBS_P7	(2 x 1) Filtered maximum value – counts. GOES I-N IR dets 1-7 block#1 wd#577
283-286	UMNBBS_P7	(4 x 1) Unfiltered mean value – counts. GOES I-N IR dets 1-7 block#1 wd#591
287-290	FMNBBS_P7	(4 x 1) Filtered mean value – counts. GOES I-N IR dets 1-7 block#1 wd#619
291-294	USDBBS_P7	(4 x 1) Unfiltered σ – counts. GOES I-N IR dets 1-7 block#1 wd#647
295-298	FSCBBS_P7	(4 x 1) Filtered σ – counts. GOES I-N IR dets 1-7 block#1 wd#675
299-302	FSRBBS_P7	(4 x 1) Filtered σ – radiance. GOES I-N IR dets 1-7 block#1 wd#703
303-306	FSTBBS_P14	(4 x 1) Filtered σ – temperature. GOES I-N IR dets 1-7 block#1 wd#731
307-310	IPSLBBS_P14	(4 x 1) Interpolated spacelevel at BB – counts. GOES I-N IR dets 1-7 block#1 wd#759
311-314		Spares – not used
Imager Post BB Spacelook Statistics for 8th IR Detector		
315-316	TSSPOB_P7	(2 x 1) Total sample size. GOES I-N IR dets 1-7 block#1 wd#791
317-318	FSSPOB_P7	(2 x 1) Filtered sample size. GOES I-N IR dets 1-7 block#1 wd#805
319-320	UMINPOB_P7	(2 x 1) Unfiltered minimum value – counts. GOES I-N IR dets 1-7 block#1 wd#819
321-322	FMINPOB_P7	(2 x 1) Filtered minimum value – counts. GOES I-N IR dets 1-7 block#1 wd#833
323-324	UMXPOB_P7	(2 x 1) Unfiltered maximum value – counts. GOES I-N IR dets 1-7 block#1 wd#847

Imager Post BB Spacelook Statistics for 8th IR Detector (Cont.)		
Block 3 Words	**Name**	**Description**
325-326	FMXPOB_P7	(2 x 1) Filtered maximum value – counts. GOES I-N IR dets 1-7 block#1 wd#861
327-330	UMNPOB_P7	(4 x 1) Unfiltered mean value – counts. GOES I-N IR dets 1-7 block#1 wd#875
331-334	FMNPOB_P7	(4 x 1) Filtered mean value – counts. GOES I-N IR dets 1-7 block#1 wd#903
335-338	USDPOB_P7	(4 x 1) Unfiltered σ – counts. GOES I-N IR dets 1-7 block#1 wd#931
339-342	FSCPOB_P7	(4 x 1) Filtered σ – counts. GOES I-N IR dets 1-7 block#1 wd#959
343-346	FSRPOB_P7	(4 x 1) Filtered σ – radiance. GOES I-N IR dets 1-7 block#1 wd#987
347-350	FSTPOB_P14	(4 x 1) Filtered σ – temperature. GOES I-N IR dets 1-7 block#1 wd#1015
Imager BB Raw Data Values for 8th IR Detector (see Imager Blackbody block 1 words 151-158 for data range)		
351-2350	IRD8RDB	(2 x 1000) IR detector 8 raw data – counts. GOES I-N IR dets 1-7 block#1 wd#1075
2351-8040		Spares – not used

Notes:

1. Format and array layouts parallel the definitions provided in Table 3-24 for Imager spacelook data; except, only IR detectors are processed during a BB-Cal.
2. Critical Alarm flags are duplicates of Table 3-30, words 60–62, to simplify message logic in the RPMs (see words 115–117).

Table 3-29. Sounder Blackbody Block 11 Format

Block 1 Words	**Name**	**Description**
1–30	**	**SAD ID (see Section 3.3.7.1)
31–38	FTTBHBS	(2 x 1) BB warning flags (see Table 3-25)
39–46	TCLSBS	CDA time of current limits set
47–48	PBSPLNS	Preblackbody scan position line number
49–50	PBSPPNS	Preblackbody scan position pixel number
51–52	BSPSCNS	BB scan position line number
53–54	BSPPXNS	BB scan position pixel number
55–198	BBWFS*	(2 x 72) BB warning flags (see Table 3-27) BBWFS_P#_P## where # = 0 - 71, and where ## = P0 - P8
199–206		Spares – not used
207-216	BBCAFS*	BB critical alarm flags (see notes) BBCAFS_P0 - P71
217 –220		Spares – not used
221	PBTPBT	Electronics side active: 0 = Side 1, 255 = Side 2
222	PXOR36	Longitudinal parity (XOR) of words 1–221
Sounder BB Statistics		
223–366	DSAMMY*	(2 x 72) Total sample size DSAMMY_P0 - P71
367–510	DSIBBY*	(2 x 72) Filtered sample size DSIBBY_P0 - P71
511–654	DUFMNV*	(2 x 72) Unfiltered minimum value – counts DUFMNV_P0 - P71

Block 1 Words	Name	Description
Sounder BB Statistics (Cont.)		
655–798	DFMNV*	(2 x 72) Filtered minimum value – counts DFMNV_P0 - P71
799–942	DUFMXV*	(2 x 72) Unfiltered maximum value – counts DUFMXV_P0 -P71
943–1086	DFMXV*	(2 x 72) Filtered maximum value – counts DFMXV_P0 – P71
1087–1374	DUFMEV*	(4 x 72) Unfiltered mean value – counts DUFMEV_P0 - P71
1375–1662	DFMEV*	(4 x 72) Filtered mean value – counts DFMEV_P - P71
1663–1950	DUFSDV*	(4 x 72) Unfiltered σ – counts DUFSDV_P0 - P71
1951–2238	DFSDV*	(4 x 72) Filtered σ – counts DFSDV_P0 - P71
2239–2526	DFSRV*	(4 x 72) Filtered σ – radiance DFSRV_P0 - P71
2527–2814	DFSTV*	(4 x 72) Filtered σ – temperature DFSTV_P0 - P71
2815	PXOR37	Longitudinal parity (XOR) of words 223–2814
2816–8040		Spares – not used

Block 2 Words	Name	Description
1–30	**	**SAD ID (see Section 3.3.7.1)
Sounder Raw Data Records		
31–574	BBDAB1*	BB data block 1 BBDAB1_P0 - P1 BBDAB1_P1_C#D1 - C#D4, where # = 1 - 19 BBDAB1_P2_P0 - P8 BBDAB1_P3 - P12
575–1118	BBDAB2*	BB data block 2 BBDAB2_P0 - P1 BBDAB2_P1_C#D1 - C#D4, where # = 1 - 19 BBDAB2_P2_P0 - P8 BBDAB2_P3 - P12
1119–1662	BBDAB3*	BB data block 3 BBDAB3_P0 - P1 BBDAB3_P1_C#D1 - C#D4, where # = 1 - 19 BBDAB3_P2_P0 - P8 BBDAB3_P3 - P12
1663–2206	BBDAB4*	BB data block 4 BBDAB4_P0 - P1 BBDAB4_P1_C#D1 - C#D4, where # = 1 - 19 BBDAB4_P2_P0 - P8 BBDAB4_P3 - P12
2207–2750	BBDAB5*	BB data block 5 BBDAB5_P0 - P1 BBDAB5_P1_C#D1 - C#D4, where # = 1 - 19 BBDAB5_P2_P0 - P8 BBDAB5_P3 - P12

Sounder Raw Data Records (Cont.)		
Block 2 Words	**Name**	**Description**
2751–3294	BBDAB6*	BB data block 6 BBDAB6_P0 - P1 BBDAB6_P1_C#D1 - C#D4, where # = 1 - 19 BBDAB6_P2_P0 - P8 BBDAB6_P3 - P12
3295–3838	BBDAB7*	BB data block 7 BBDAB7_P0 - P1 BBDAB7_P1_C#D1 - C#D4, where # = 1 - 19 BBDAB7_P2_P0 - P8 BBDAB7_P3 - P12
3839–4382	BBDAB8*	BB data block 8 BBDAB8_P0 - P1 BBDAB8_P1_C#D1 - C#D4, where # = 1 - 19 BBDAB8_P2_P0 - P8 BBDAB8_P3 - P12
4383–4926	BBDAB9*	BB data block 9 BBDAB9_P0 - P1 BBDAB9_P1_C#D1 - C#D4, where # = 1 - 19 BBDAB9_P2_P0 - P8 BBDAB9_P3 - P12
4927–5470	BBDAB10*	BB data block 10 BBDAB10_P0 - P1 BBDAB10_P1_C#D1 - C#D4, where # = 1 - 19 BBDAB10_P2_P0 - P8 BBDAB10_P3 - P12
5471–6014	BBDAB11*	BB data block 11 BBDAB11_P0 - P1 BBDAB11_P1_C#D1 - C#D4, where # = 1 - 19 BBDAB11_P2_P0 - P8 BBDAB11_P3 - P12
6015–8040		Spares – not used
Block 3, [4] Words	**Name**	**Description**
1–30	**	**SAD ID (see Section 3.3.7.1)
Sounder Raw Data Records		
31–574	BBDAB12*	BB data block 12, [23] BBDAB12_P0 - P1 BBDAB12_P1_C#D1 - C#D4, where # = 1 - 19 BBDAB12_P2_P0 - P8 BBDAB12_P3 - P12
575–1118	BBDAB13*	BB data block 13, [24] BBDAB13_P0 - P1 BBDAB13_P1_C#D1 - C#D4, where # = 1 - 19 BBDAB13_P2_P0 - P8 BBDAB13_P3 - P12
1119–1662	BBDAB14*	BB data block 14, [25] BBDAB14_P0 - P1 BBDAB14_P1_C#D1 - C#D4, where # = 1 - 19 BBDAB14_P2_P0 - P8 BBDAB14_P3 - P12
1663–2206	BBDAB15*	BB data block 15, [26] BBDAB15_P0 - P1 BBDAB15_P1_C#D1 - C#D4, where # = 1 - 19 BBDAB15_P2_P0 - P8 BBDAB15_P3 - P12

Sounder Raw Data Records (Cont.)		
Block 3, [4] Words	**Name**	**Description**
2207–2750	BBDAB16*	BB data block 16, [27] BBDAB16_P0 - P1 BBDAB16_P1_C#D1 - C#D4, where # = 1 - 19 BBDAB16_P2_P0 - P8 BBDAB16_P3 - P12
2751–3294	BBDAB17*	BB data block 17, [28] BBDAB17_P0 - P1 BBDAB17_P1_C#D1 - C#D4, where # = 1 - 19 BBDAB17_P2_P0 - P8 BBDAB17_P3 - P12
3295–3838	BBDAB18*	BB data block 18, [29] BBDAB18_P0 - P1 BBDAB18_P1_C#D1 - C#D4, where # = 1 - 19 BBDAB18_P2_P0 - P8 BBDAB18_P3 - P12
3839–4382	BBDAB19*	BB data block 19, [30] BBDAB19_P0 - P1 BBDAB19_P1_C#D1 - C#D4, where # = 1 - 19 BBDAB19_P2_P0 - P8 BBDAB19_P3 - P12
4383–4926	BBDAB20*	BB data block 20, [31] BBDAB20_P0 - P1 BBDAB20_P1_C#D1 - C#D4, where # = 1 - 19 BBDAB20_P2_P0 - P8 BBDAB20_P3 - P12
4927–5470	BBDAB21*	BB data block 21, [32] BBDAB21_P0 - P1 BBDAB21_P1_C#D1 - C#D4, where # = 1 - 19 BBDAB21_P2_P0 - P8 BBDAB21_P3 - P12
5471–6014	BBDAB22*	BB data block 22, [33] BBDAB22_P0 - P1 BBDAB22_P1_C#D1 - C#D4, where # = 1 - 19 BBDAB22_P2_P0 - P8 BBDAB22_P3 - P12
6015–8040		Spares – not used
Block 5 Words	**Name**	**Description**
1–30	**	**SAD ID (see Section 3.3.7.1)
Sounder Raw Data Records		
31–574	BBDAB34*	BB data block 34 BBDAB34_P0 - P1 BBDAB34_P1_C#D1 - C#D4, where # = 1 - 19 BBDAB34_P2_P0 - P8 BBDAB34_P3 - P12
575–1118	BBDAB35*	BB data block 35 BBDAB35_P0 - P1 BBDAB35_P1_C#D1 - C#D4, where # = 1 - 19 BBDAB35_P2_P0 - P8 BBDAB35_P3 - P12
1119–1662	BBDAB36*	BB data block 36 BBDAB36_P0 - P1 BBDAB36_P1_C#D1 - C#D4, where # = 1 - 19 BBDAB36_P2_P0 - P8 BBDAB36_P3 - P12

Block 5 Words	Name	Description
Sounder Raw Data Records (Cont.)		
1663–2206	BBDAB37*	BB data block 37 BBDAB37_P0 - P1 BBDAB37_P1_C#D1 - C#D4, where # = 1 - 19 BBDAB37_P2_P0 - P8 BBDAB37_P3 - P12
2207–2750	BBDAB38*	BB data block 38 BBDAB38_P0 - P1 BBDAB38_P1_C#D1 - C#D4, where # = 1 - 19 BBDAB38_P2_P0 - P8 BBDAB38_P3 - P12
2751–3294	BBDAB39*	BB data block 39 BBDAB39_P0 - P1 BBDAB39_P1_C#D1 - C#D4, where # = 1 - 19 BBDAB39_P2_P0 - P8 BBDAB39_P3 - P12
3295–3838	BBDAB40*	BB data block 40 BBDAB40_P0 - P1 BBDAB40_P1_C#D1 - C#D4, where # = 1 - 19 BBDAB40_P2_P0 - P8 BBDAB40_P3 - P12
3839–8040		Spares – not used

Notes:

1. BB critical alarm flags, Block 1, words 207 – 216, are duplicates of Table 3-31, words 73 – 82. The alarm flags are provided here to simplify the message logic in the PMs.
2. All arrays sized 2 x 72 in the statistics section of Block 1 contain positive integer values, right-adjusted, and zero-filled. The 4 x 72 arrays contain floating point values.
3. The format of the raw data BB records 1 – 40 contained in the second through fifth Block 11s, is defined in Table 3-13.

3.3.7.9 Calibration Coefficients and Limits Format

The calibration coefficients are used in both visible and IR channels. The IR calibration coefficients employed for each instrument are updated following each spacelook and BB-Cal event. The updated coefficients are reported in the Block 11 formats defined in Table 3-30 and Table 3-31 for the Imager and Sounders, respectively. Included in these formats are the warning and critical alarm limits associated with each instrument for the four statistics computation sequences, telemetry statistics, ECAL, spacelook calibration, and BB-Cal.

The IR calibration coefficients are identified as a specific set through the use of a CDA time tag reflecting the time they were calculated and subsequently implemented within the SPS. This time tag is included in the documentation associated with each instrument's scan data to permit positive identification of the calibration coefficients employed to generate the pixel imagery. In a similar sense, the warning and critical alarm limits are uniquely identified by a CDA time tag indicating when the last update was made to the limits set in use. This time tag accompanies each of the reports made for the statistics computation sequences so that the limits employed in their generation can be ascertained.

The visible channel calibration coefficients are expressed as adjustment parameters, which are updated monthly. Users can multiply the factory visible channel first order gain and bias coefficients by this adjustment factor to obtain an updated set of the calibration coefficients for the bias and the

first order gain. The visible channel calibration coefficients in the Block 11 consist of the current adjustment parameters and date, the previous adjustment parameters and date, and the initial adjustment factor that is always 1 and the date. The detailed locations and mnemonics are listed in Table 3-30.

Table 3-30. Imager Calibration and Limits Block 11 Format

Words	Name	Description
1–30	**	**SAD ID (see Section 3.3.7.1)
31–38	TIRCOC	CDA time IR coefficients calculated
39–46	TCLSCI	CDA time of current limits set
47–54	TCVNCI	CDA time current visible NLUTs created
55–56		Spares – not used
57–59	SLCCCAFI*	Spacelook Data Critical Alarm Flags (see Table 3-32) SLCCCAFI_P0 - P21 GOES O-P 8th IR det @ wd#7411
60–62	BBCCCAFI*	BB Data Critical Alarm Flags (see Table 3-32) BBCCCAFI_P0 - P13 GOES O-P 8th IR det @ wd#7412
63–64	TDCAFCCI*	Temperature Data Critical Alarm Flags (see Table 3-32) TDCAFCCI_P0 - P9
65–71	IDMGAFCCI*	IR detector M Gain Alarm Flags (see Table 3-32) IDMGAFCCI_P#_P where # = 0 - 6 IDMGAFCCI_P#_P0 - P4 where # = 0 – 6 GOES O-P 8th IR det @ wd#7413
72	BBTGAFCCI	BB temperature gradient alarm flag (= x ‘FF’ if σ of 8 BB temperatures is excessive)
73	SMTCCI	Scan mirror temperature out-of-range at BB-Cal (= 255 if true)
74–209		Spares – not used
210	TRIGEVI	Triggering event: 0 = spacelook, 255 = BB
211–218	TTRIGEI	CDA time of triggering event (see notes)
219–220		Spares – not used
221	LOTSOFEM	Electronics side active 0 = Side 1, 255 = Side 2
222	PXOR38	Longitudinal parity (XOR) of words 1–221
Imager Calibration Data		
223–250	CIDBCCI*	(4 x 7) Current IR detector biases CIDBCCI_P0 - P6 GOES O-P 8th IR det @ wd#7415
251–278	CID1CCI*	(4 x 7) Current IR detector first-order gains CID1CCI_P0 - P6 GOES O-P 8th IR det @ wd#7419
279–306	CID2CCI*	(4 x 7) Current IR detector second-order gains (q’s) CID2CCI_P0 - P6 GOES O-P 8th IR det @ wd#7423
307–310	CWBBTI	(4 x 1) Current weighted mean BB temperature
311–314	CWBPTI	(4 x 1) Current weighted mean baseplate temperature
315–318	CSPTCCI	(4 x 1) Current smoothed patch temperature

Imager Calibration Data (Cont.)		
Words	**Name**	**Description**
319–322	CS8BBTI	(4 x 1) Current σ of 8 BB temperatures
323–326	CST8BBTI	(4 x 1) Current σ tolerance for 8 BB temperatures
327–350	BPTWFI	(4 x 6) Baseplate thermistor weighting factors BPTWFI_P0 - P5
351–382	BBTWFI	(4 x 8) BB thermistor weighting factors BBTWFI_P0 - P7
383–386	CWMHFA	(4 x 1) Current A weight for M-history file
387–390	CWMHFB	(4 x 1) Current B weight for M-history file
391–394	CWMHFC	(4 x 1) Current C weight for M-history file
395–398	CWMHFD	(4 x 1) Current D weight for M-history file
399–414	BBTFSSI*	(2 x 8) BB thermistor filtered sample size BBTFSSI_P0 - P7
415	BBTWSI	BB thermistor window size N
416	CPTCLI	Current patch temperature control level {1:7} (see Note 6)
417	IRCALBM	IR Calibration B (bias) Mode 1
418	IRCALMM	IR Calibration M (first-order gain) Mode {1:7}
419	IRCALQM	IR Calibration Q (second-order gain) Mode {1:3}
420	VRNDCCI	Visible reference normalization detector
421	MHWWHI	M-history window width in hours {1–24}
422	MHWDDI	M-history window depth in days {1–10}
423–448	MHROSI	(1 x 26) M-history regression optical selectors
449		Spare–not used
450	EWCED	E-W correction enabled/disabled (0 = disabled, 255 = enabled)
451–454	SMTBBC	(4 x 1) Scan mirror temperature at BB-Cal
455–470	CAECOEF*	(4 x 4) Current a emissivity coefficients (intercept) CAECOEF_P0 - P3
471–486	CBECOEF*	(4 x 4) Current b emissivity coefficients (first-order) CBECOEF_P0 - P3
487–502	CCECOEF*	(4 x 4) Current c emissivity coefficients (second-order) CCECOEF_P0 - P3
503-516	IMBCC*	MBCC status for 7 IR detectors. 0 for MBCC set off, 1 for MBCC set on but regression slope not used, 2 for MBCC set on and regression slope used IMBCC_P1 - P7 GOES O-P 8th IR det @ wd#7695
517-530	IMBCG1ML*	MBCC IR calibration for 7 detectors (first-order gain) Mode {1:14} IMBCG1ML_P1 - P7 GOES O-P 8th IR det @ wd#7697
531–733		Not used (set to zeros)
734	PXOR39	Longitudinal parity (XOR) of words 223–733
Imager Telemetry Warning Limits		
735–862	MFSSL*	(2 x 64) Minimum filtered sample size limits MFSSL_P0 - P28
863–990	LPFLCCI*	(2 x 64) Low pass filter limit – counts LPFLCCI_P0 - P28

Imager Telemetry Warning Limits (Cont.)		
Words	**Name**	**Description**
991–1118	HPFLCCI*	(2 x 64) High pass filter limit – counts HPFLCCI_P0 - P28
1119–1374	UFMELLI*	(4 x 64) Unfiltered mean low limit – counts UFMELLI_P0 - P28
1375–1630	FMELLI*	(4 x 64) Filtered mean low limit – counts FMELLI_P0 - P28
1631–1886	UFMEHLI*	(4 x 64) Unfiltered mean high limit – counts UFMEHLI_P0 - P28
1887–2142	FMEHLI*	(4 x 64) Filtered mean high limit – counts FMEHLI_P0 - P28
2143–2398	UFSGHLI*	(4 x 64) Unfiltered σ high limit – counts UFSGHLI_P0 - P28
2399–2654	FSGHLI*	(4 x 64) Filtered σ high limit – counts FSGHLI_P0 - P28
2655–2910	FMELLEU*	(4 x 64) Filtered mean low limit – engineering units FMELLEU_P0 - P28
2911–3166	FMEHLEU*	(4 x 64) Filtered mean high limit – engineering units FMEHLEU_P0 - P28
3167–3422	FSGHLEU*	(4 x 64) Filtered σ high limit – engineering units FSGHLEU_P0 - P28
Imager Telemetry Critical Alarm Limits		
3423–3486	MNFSS*	(2 x 32) Minimum filtered sample size limits MNFSS_P0 - P25
3487–3614	FMELLSEU*	(4 x 32) Filtered mean low limits – engineering units FMELLSEU_P0 - P25
3615–3742	FMEHLSEU*	(4 x 32) Filtered mean high limits – engineering units FSGLSEU_P0 - P25
3743–3870	FSGLSEU*	(4 x 32) Filtered σ limits – engineering units FSGLSEU _P0 - P25
3871–4061		Spares – not used
4062	PXOR40	Longitudinal parity (XOR) of words 735–4061
Imager ECAL Warning Limits		
4063–4066	EXRRL	(4 x 1) Excessive residual RMS limit (all detectors)
4067–4098	CH1LLI*	(2 x 16) Channel 1 low filter limits/step – counts CH1LLI_P0 - P15
4099–4130	CH2LLI*	(2 x 16) Channel 2 low filter limits/step – counts CH2LLI_P0 – P15
4131–4162	CH3LLI*	(2 x 16) Channel 3 low filter limits/step – counts CH3LLI_P0 – P15
4163–4194	CH4LLI*	(2 x 16) Channel 4 low filter limits/step – counts CH4LLI_P0 – P15
4195–4226	CH6LLI*	(2 x 16) Channel 5 low filter limits/step – counts CH6LLI_P0 - P15
4227–4258	CH1HLI*	(2 x 16) Channel 1 high filter limits/step – counts CH1HLI_P0 - P15
4259–4290	CH2HLI*	(2 x 16) Channel 2 high filter limits/step – counts CH2HLI_P0 - P15

Imager ECAL Warning Limits (Cont.)		
Words	**Name**	**Description**
4291–4322	CH3HLI*	(2 x 16) Channel 3 high filter limits/step – counts CH3HLI_P0 - P15
4323–4354	CH4HLI*	(2 x 16) Channel 4 high filter limits/step – counts CH4HLI_P0 – P15
4355–4386	CH6HLI*	(2 x 16) Channel 5 high filter limits/step – counts CH6HLI_P0 – P15
4387–4430	LSDCI*	(2 x 22) Leading sample discard count/detector LSDCI_P0 – P21 GOES O-P 8th IR det @ wd#7427
4431–4474	MNFSLI*	(2 x 22) Minimum filtered samples limit/detector MNFSLI_P0 – P21 GOES O-P 8th IR det @ wd#7431
4475–4573		Spares – not used
4574	PXOR41	Longitudinal parity (XOR) of words 4063–4573
Imager Spacelook Warning Limits		
4575–4618	MNFSSLSLI*	(2 x 22) Minimum filtered sample size limits MNFSSLSLI_P0 – P21 GOES O-P 8th IR det @ wd#7435
4619–4662	LFLSLII*	(2 x 22) Low filter limit – counts LFLSLII_P0 – P21 GOES O-P 8th IR det @ wd#7439
4663–4706	HFLSLI*	(2 x 22) High filter limit – counts HFLSLI_P0 – P21 GOES O-P 8th IR det @ wd#7443
4707–4794	UFMELLSLI*	(4 x 22) Unfiltered mean low limit – counts UFMELLSLI_P0 – P21 GOES O-P 8th IR det @ wd#7447
4795–4882	FMELLSLI*	(4 x 22) Filtered mean low limit – counts FMELLSLI_P0 – P21 GOES O-P 8th IR det @ wd#7455
4883–4970	UFMEHLSLI*	(4 x 22) Unfiltered mean high limit – counts UFMEHLSLI_P0 – P21 GOES O-P 8th IR det @ wd#7463
4971–5058	FMEHLSLI*	(4 x 22) Filtered mean high limit – counts FMEHLSLI_P0 – P21 GOES O-P 8th IR det @ wd#7471
5059–5146	UFSGHLSLI*	(4 x 22) Unfiltered σ high limit – counts UFSGHLSLI_P0 – P21 GOES O-P 8th IR det @ wd#7479
5147–5234	FSGHLSLI*	(4 x 22) Filtered σ high limit – counts FSGHLSLI_P0 – P21 GOES O-P 8th IR det @ wd#7487
5235–5322	FSGHLSLRI*	(4 x 22) Filtered σ high limit – radiance FSGHLSLRI_P0 – P21 GOES O-P 8th IR det @ wd#7495
5323–5410	FSGHLSLTI*	(4 x 22) Filtered σ high limit – temperature FSGHLSLTI_P0 – P21 GOES O-P 8th IR det @ wd#7503

Words	Name	Description
Imager Spacelook Critical Limits		
5411–5454	MNFSSDSLI	(2 x 22) Minimum filtered sample size/detector MNFSSDSLI_P0 - P21 GOES O-P 8th IR det @ wd#7511
5455–5597		Spares – not used
5598	PXOR42	Longitudinal parity (XOR) of words 4575–5597
Imager Pre-clamp Warning Limits		
5599–5642	MNFSSLPRCI*	(2 x 22) Minimum filtered sample size limits MNFSSLPRCI_P0 - P21 GOES O-P 8th IR det @ wd#7515
5643–5686	LFLPRCII*	(2 x 22) Low filter limit – counts LFLPRCII_P0 - P21 GOES O-P 8th IR det @ wd#7519
5687–5730	HFLPRCI*	(2 x 22) High filter limit – counts HFLPRCI_P0 - P21 GOES O-P 8th IR det @ wd#7523
5731–5818	UFMELLPRCI*	(4 x 22) Unfiltered mean low limit – counts UFMELLPRCI_P0 - P21 GOES O-P 8th IR det @ wd#7527
5819–5906	FMELLPRCI*	(4 x 22) Filtered mean low limit – counts FMELLPRCI_P0 - P21 GOES O-P 8th IR det @ wd#7535
5907–5994	UFMEHLPRCI*	(4 x 22) Unfiltered mean high limit – counts UFMEHLPRCI_P0 - P21 GOES O-P 8th IR det @ wd#7543
5995–6082	FMEHLPRCI*	(4 x 22) Filtered mean high limit – counts FMEHLPRCI_P0 - P21 GOES O-P 8th IR det @ wd#7551
6083–6170	UFSGHLPRCI*	(4 x 22) Unfiltered σ high limit – counts UFSGHLPRCI_P0 - P21 GOES O-P 8th IR det @ wd#7559
6171–6258	FSGHLPRCI*	(4 x 22) Filtered σ high limit – counts FSGHLPRCI_P0 - P21 GOES O-P 8th IR det @ wd#7567
6259–6346	FSGHLPRCRI*	(4 x 22) Filtered σ high limit – radiance FSGHLPRCRI_P0 - P21 GOES O-P 8th IR det @ wd#7575
6347–6434	FSGHLPRCTI*	(4 x 22) Filtered σ high limit – temperature FSGHLPRCTI_P0 - P21 GOES O-P 8th IR det @ wd#7583
6435–6621		Spares – not used
6622	PXOR43	Longitudinal parity (XOR) of words 5599–6621
Imager BB Warning Limits		
6623–6650	MNFSSLBBI*	(2 x 14) Minimum filtered sample size limits MNFSSLBBI_P0 - P13 GOES O-P 8th IR det @ wd#7591

Imager BB Warning Limits (Cont.)		
Words	**Name**	**Description**
6651–6678	LFLBBII*	(2 x 14) Low filter limit – counts LFLBBII_P0 - P13 GOES O-P 8th IR det @ wd#7595
6679–6706	HFLBBI*	(2 x 14) High filter limit – counts HFLBBI_P0 - P13 GOES O-P 8th IR det @ wd#7599
6707–6762	UFMELLBBI*	(4 x 14) Unfiltered mean low limit – counts UFMELLBBI_P0 - P13 GOES O-P 8th IR det @ wd#7603
6763–6818	FMELLBBI*	(4 x 14) Filtered mean low limit – counts FMELLBBI_P0 - P13 GOES O-P 8th IR det @ wd#7611
6819–6874	UFMEHLBBI*	(4 x 14) Unfiltered mean high limit – counts UFMEHLBBI_P0 - P13 GOES O-P 8th IR det @ wd#7619
6875–6930	FMEHLBBI*	(4 x 14) Filtered mean high limit – counts FMEHLBBI_P0 - P13 GOES O-P 8th IR det @ wd#7627
6931–6986	UFSGHLBBI*	(4 x 14) Unfiltered σ high limit – counts UFSGHLBBI_P0 - P13 GOES O-P 8th IR det @ wd#7635
6987–7042	FSGHLBBI*	(4 x 14) Filtered σ high limit – counts FSGHLBBI_P0 - P13 GOES O-P 8th IR det @ wd#7643
7043–7098	FSGHLBBRI*	(4 x 14) Filtered σ high limit – radiance FSGHLBBRI_P0 - P13 GOES O-P 8th IR det @ wd#7651
7099–7154	FSGHLBBTI*	(4 x 14) Filtered σ high limit – temperature FSGHLBBTI_P0 - P13 GOES O-P 8th IR det @ wd#7659
Imager BB-Cal Critical Limits		
7155–7182	MNFSSDBBI*	(2 x 14) Minimum filtered sample size/detector MNFSSDBBI_P0 - P13 GOES O-P 8th IR det @ wd#7667
Imager Calibration Critical Limits		
7183–7186	MXBPTGL	(4 x 1) Maximum baseplate temperature for gain LUT
7187–7190	MNBPTGL	(4 x 1) Minimum baseplate temperature for gain LUT
7191–7192	MNFSSBT	(2 x 1) Minimum filtered sample size/BB thermistor
7193–7194		Unused – zeros
7195–7206	MXBII	(4 x 3) Maximum bias interpolation interval (msec)
7207–7234	MXSLR*	(4 x 7) Maximum space level rate/detector (counts/second) MXSLR_P0 - P6 GOES O-P 8th IR det @ wd#7671
7235–7262	MXMRM2*	(4 x 7) Maximum M (first order gain) rate in mode 2 (MBCC OFF) or 9 (MBCC ON) MXMRM2_P0 - P6 GOES O-P 8th IR det @ wd#7675

Imager Calibration Critical Limits (Cont.)		
Words	**Name**	**Description**
7263–7266	MXPOPM35	(4 x 1) Maximum percentage of outliers permitted in M modes 3&5 (MBCC OFF) or 10&12 (MBCC ON)
7267–7294	MXSEEALARM45*	(4 x 7) Maximum standard error of estimate (SEE) for M modes 4&5 (MBCC OFF) or 11&12 (MBCC ON) MXSEEALARM45_P0 - P6 GOES O-P 8th IR det @ wd#7679
7295–7322	MXSEEALARM67*	(4 x 7) Maximum Root Sum Squared (RSS) error for M modes 6&7 (MBCC OFF) or 13&14 (MBCC ON) MXSEEALARM67_P0 - P6 GOES O-P 8th IR det @ wd#7683
7323–7326	ALPHABET	(4 x 1) N-σ tolerance for M-history filtering
7327–7330	ITERATION	(4 x 1) Maximum number of iterations M-history filtering
7331–7334	MNMINBB	(4 x 1) Minimum minutes between BB-Cal
7335–7338	MRECOMP	(4 x 1) M recomputation interval (2-minute units)
7339–7342	HELPIMBORED	(4 x 1) Minimum delta patch temperature for M mode 2 (MBCC OFF) or 9 (MBCC ON)
7343–7370	WHATSWITHM	(4 x 7) Minimum delta gain for M mode 2 (MBCC OFF) or 9 (MBCC ON) GOES O-P 8th IR det @ wd#7687
7371–7398	WOWWEE	(4 x 7) Minimum rate (slope) in M mode 2 (MBCC OFF) or 9 (MBCC ON) GOES O-P 8th IR det @ wd#7691
7399–7401		Unused – zeros
7402	PXOR44	Longitudinal parity (XOR) of words 6623–7401
7403-7410		Unused – zeros
Note: 7411-7698 are only used for GOES-O and Beyond. Otherwise they are spare.		
7411-7411	SLCCCAFI*	Spacelook Data Critical Alarm Flags (see Table 3-32) SLCCCAFI_P22 – P23 GOES I-N IR dets 1-7 wd#57-59
7412-7412	BBCCCAFI*	BB Data Critical Alarm Flags (see Table 3-32) BBCCCAFI_P14 – P15 GOES I-N IR dets 1-7 wd#60-62
7413-7413	IDMGAFCCI*	8th IR detector M Gain Alarm Flags IDMGAFCCI_P7_P IDMGAFCCI_P7_P0 – P4 GOES I-N IR dets 1-7 wd#65-71
Imager Calibration Data for 8th IR Detector		
7414-7414		Spares not used.
7415-7418	CIDBCCI_P7	(4 x 1) Current 8th IR detector biases. GOES I-N IR dets 1-7 wd#223
7419-7422	CID1CCI_P7	(4 x 1) Current 8th IR detector first-order gains. GOES I-N IR dets 1-7 wd#251
7423-7426	CID2CCI_P7	(4 x 1) Current 8th IR detector second-order gains (q's). GOES I-N IR dets 1-7 wd#279

Words	Name	Description
Imager ECAL Warning Limits for 8th IR Detector		
7427-7430	LSDCI*	(2 x 2) Leading sample discard count/detector LSDCI_P22 – P23 GOES I-N IR dets 1-7 wd#4387
7431-7434	MNFSLI*	(2 x 2) Minimum filtered samples limit/detector MNFSLI_P22 – P23 GOES I-N IR dets 1-7 wd#4431
Imager Spacelook Warning Limits for 8th IR Detector		
7435-7438	MNFSSLSLI*	(2 x 2) Minimum filtered sample size limits MNFSSLSLI_P22 – P23 GOES I-N IR dets 1-7 wd#4575
7439-7442	LFLSLII*	(2 x 2) Low filter limit – counts LFLSLII_P22 – P23 GOES I-N IR dets 1-7 wd#4619
7443-7446	HFLSLI*	(2 x 2) High filter limit – counts HFLSLI_P22 – P23 GOES I-N IR dets 1-7 wd#4663
7447-7454	UFMELLSLI*	(4 x 2) Unfiltered mean low limit – counts UFMELLSLI_P22 – P23 GOES I-N IR dets 1-7 wd#4707
7455-7462	FMELLSLI*	(4 x 2) Filtered mean low limit – counts FMELLSLI_P22 – P23 GOES I-N IR dets 1-7 wd#4795
7463-7470	UFMEHLSLI*	(4 x 2) Unfiltered mean high limit – counts UFMEHLSLI_P22 – P23 GOES I-N IR dets 1-7 wd#4883
7471-7478	FMEHLSLI*	(4 x 2) Filtered mean high limit – counts FMEHLSLI_P22 – P23 GOES I-N IR dets 1-7 wd#4971
7479-7486	UFSGHLSLI*	(4 x 2) Unfiltered σ high limit – counts UFSGHLSLI_P22 – P23 GOES I-N IR dets 1-7 wd#5059
7487-7494	FSGHLSLI*	(4 x 2) Filtered σ high limit – counts FSGHLSLI_P22 – P23 GOES I-N IR dets 1-7 wd#5147
7495-7502	FSGHLSLRI*	(4 x 2) Filtered σ high limit – radiance FSGHLSLRI_P22 – P23 GOES I-N IR dets 1-7 wd#5235
7503-7510	FSGHLSLTI*	(4 x 2) Filtered σ high limit – temperature FSGHLSLTI_P22 – P23 GOES I-N IR dets 1-7 wd#5323
7511-7514	MNFSSDSLI	(2 x 2) Minimum filtered sample size/detector MNFSSDSLI_P22 – P23 GOES I-N IR dets 1-7 wd#5411
Imager Spacelook Critical Limits for 8th IR Detector		
7515-7518	MNFSSLPRCI*	(2 x 2) Minimum filtered sample size limits MNFSSLPRCI_P22 – P23 GOES I-N IR dets 1-7 wd#5599

Words	Name	Description
Imager Pre-clamp Warning Limits for 8th IR Detector		
7519-7522	LFLPRCII*	(2 x 2) Low filter limit – counts LFLPRCII_P22 – P23 GOES I-N IR dets 1-7 wd#5643
7523-7526	HFLPRCI*	(2 x 2) High filter limit – counts HFLPRCI_P22 – P23 GOES I-N IR dets 1-7 wd#5687
7527-7534	UFMELLPRCI*	(4 x 2) Unfiltered mean low limit – counts UFMELLPRCI_P2 – P23 GOES I-N IR dets 1-7 wd#5731
7535-7542	FMELLPRCI*	(4 x 2) Filtered mean low limit – counts FMELLPRCI_P22 – P23 GOES I-N IR dets 1-7 wd#5819
7543-7550	UFMEHLPRCI*	(4 x 2) Unfiltered mean high limit – counts UFMEHLPRCI_P22 – P23 GOES I-N IR dets 1-7 wd#5907
7551-7558	FMEHLPRCI*	(4 x 2) Filtered mean high limit – counts FMEHLPRCI_P22 – P23 GOES I-N IR dets 1-7 wd#5995
7559-7566	UFSGHLPRCI*	(4 x 2) Unfiltered σ high limit – counts UFSGHLPRCI_P22 – P23 GOES I-N IR dets 1-7 wd#6083
7567-7574	FSGHLPRCI*	(4 x 2) Filtered σ high limit – counts FSGHLPRCI_P22 – P23 GOES I-N IR dets 1-7 wd#6171
7575-7582	FSGHLPRCRI*	(4 x 2) Filtered σ high limit – radiance FSGHLPRCRI_P22 – P23 GOES I-N IR dets 1-7 wd#6259
7583-7590	FSGHLPRCTI*	(4 x 2) Filtered σ high limit – temperature FSGHLPRCTI_P22 – P23 GOES I-N IR dets 1-7 wd#6347
7591-7594	MNFSSLBBI*	(2 x 2) Minimum filtered sample size limits MNFSSLBBI_P14 – P15 GOES I-N IR dets 1-7 wd#6623
7595-7598	LFLBBII*	(2 x 2) Low filter limit – counts LFLBBII_P14 – P15 GOES I-N IR dets 1-7 wd#6651
7599-7602	HFLBBI*	(2 x 2) High filter limit – counts HFLBBI_P14 – P15 GOES I-N IR dets 1-7 wd#6679
7603-7610	UFMELLBBI*	(4 x 2) Unfiltered mean low limit – counts UFMELLBBI_P14 - P15 GOES I-N IR dets 1-7 wd#6707
7611-7618	FMELLBBI*	(4 x 2) Filtered mean low limit – counts FMELLBBI_P14 - P15 GOES I-N IR dets 1-7 wd#6763
7619-7626	UFMEHLBBI*	(4 x 2) Unfiltered mean high limit – counts UFMEHLBBI_P14 - P15 GOES I-N IR dets 1-7 wd#6819

Imager Pre-clamp Warning Limits for 8th IR Detector (Cont.)		
Words	**Name**	**Description**
7627-7634	FMEHLBBI*	(4 x 2) Filtered mean high limit – counts FMEHLBBI_P14 - P15 GOES I-N IR dets 1-7 wd#6875
7635-7642	UFSGHLBBI*	(4 x 2) Unfiltered σ high limit – counts UFSGHLBBI_P14 - P15 GOES I-N IR dets 1-7 wd#6931
7643-7650	FSGHLBBI*	(4 x 2) Filtered σ high limit – counts FSGHLBBI_P14 - P15 GOES I-N IR dets 1-7 wd#6987
7651-7658	FSGHLBBRI*	(4 x 2) Filtered σ high limit – radiance FSGHLBBRI_P14 - P15 GOES I-N IR dets 1-7 wd#7043
7659-7666	FSGHLBBTI*	(4 x 2) Filtered σ high limit – temperature FSGHLBBTI_P14 - P15 GOES I-N IR dets 1-7 wd#7099
Imager BB-Cal Critical Limits for 8th IR Detector		
7667-7670	MNFSSDBBI*	(2 x 2) Minimum filtered sample size/detector MNFSSDBBI_P14 - P15 GOES I-N IR dets 1-7 wd#7155
Imager Calibration Critical Limits for 8th IR Detector		
7671-7674	MXMRM2_P7	(4 x 1) Maximum space level rate/detector (counts/second) GOES I-N IR dets 1-7 wd#7207
7675-7678	MXMRM2_P7	(4 x 1) Maximum M (first-order gain) rate in M mode 2 (MBCC OFF) or 9 (MBCC ON) GOES I-N IR dets 1-7 wd#7235
7679-7682	MXSEEALARM45_P7	(4 x 1) Maximum Standard Error of Estimate (SEE) for M modes 4&5 (MBCC OFF) or 11&12 (MBCC ON) GOES I-N IR dets 1-7 wd#7267
7683-7686	MXSEEALARM67_P7	(4 x 1) Maximum RSS error for M modes 6&7 (MBCC OFF) or 13&14 (MBCC ON) GOES I-N IR dets 1-7 wd#7295
7687-7690	WHATSWITHM2	(4 x 1) Minimum delta gain for M mode 2 (MBCC OFF) or 9 (MBCC ON) GOES I-N IR dets 1-7 wd#7343
7691-7694	WOWWEE2	(4 x 1) Minimum rate (slope) in M mode 2 (MBCC OFF) or 9 (MBCC ON) GOES I-N IR dets 1-7 wd#7371
7695-7696	IMBCC_P8	MBCC indicator for 8th detector: 0 = inactive, 1 = active but not used, 2 = active and used. GOES I-N IR dets 1-7 wd#503
7697-7698	IMBCG1ML_P8	MBCC IR calibration for 8th detector (first-order gain) Mode {1:14}. GOES I-N IR dets 1-7 wd#517
Imager Visible Calibration Adjustment Parameters		
7699 – 7706	VISCALINITDATE	Visible calibration initial adjustment date
7707 – 7710	VISCALINITFACTOR	Visible calibration initial adjustment factor
7711 – 7718	VISCALPREVDATE	Visible calibration previous adjustment date
7719 - 7722	VISCALPREVFACTOR	Visible calibration previous adjustment factor
7723 - 7730	VISCALCURRDATE	Visible calibration current adjustment date
7731 - 7734	VISCALCURRFACTOR	Visible calibration current adjustment factor

Imager Visible Calibration Adjustment Parameters (Cont.)		
Words	**Name**	**Description**
7735 - 7766	C_IVCRB*	Visible detectors characteristic response bias coefficients array. C_IVCRB_P0 - P7 Same as block 0 wd#6399-6430 for GOES I-N and Imager Factory Coefficients block 11 wd#135-166 GOES M-P
7767 - 7798	C_IVCR1*	Visible detectors characteristic response first-order gain coefficients array. C_IVCR1_P0 - P7 Same as block 0 wd#6431-6462 for GOES I-N Imager Factory Coefficients block 11 wd#167-198 GOES M-P
7799 - 7830	C_IVCR2*	Visible detector characteristic response second-order gain coefficients array. C_IVCR2_P0 - P7 Same as block 0 wd#6463-6494 for GOES I-N and Imager Factory Coefficients block 11 wd#199-230 GOES M-P
7831–7834	C_IVRAL	Visible detectors radiance-to-albedo conversion factor, one value for all eight detectors. Same as block 0 wd#6495-6498 for GOES I-N and Imager Factory Coefficients block 11 wd#231-234 GOES M-P
7835 - 8040		Spares – not used

Notes:

1. This Block 11 format is produced following every spacelook and BB-Cal sequence. The trigger time in words 211–218 is the time associated with the raw data header block of the triggering event (spacelook or BB) identified in word 210.
2. All arrays sized as 4 x *N* are floating point value arrays.
3. All arrays sized as 2 x *N* are integer value arrays.
4. All limit arrays sized as *N* x 22 contain data for all 22 imaging detectors as follows:
   1 – 8 – Visible detectors 1 – 8
   9 – 15 – Primary IR detectors 1 – 7
   16 – 22 – Redundant IR detectors 1 – 7
5. All limit arrays for BB-Cal, sized *N* x 14, contain data for the 14 IR detectors only, as follows:
   1 – 7 – Primary IR detectors 1 – 7
   8 – 14 – Redundant IR detectors 1 – 7
6. The value of word 416 is given by the following, based on the patch temperature:
   1 = less than Control point 1 lower limit
   2 = between Control point 1 lower and upper limits
   3 = between Control point 1 upper limit and Control point 2 lower limit
   4 = between Control point 2 lower and upper limits
   5 = between Control point 2 upper limit and Control point 3 lower limit
   6 = between Control point 3 lower and upper limits
   7 = beyond Control point 3 upper limit

Table 3-31. Sounder Calibration and Limits Block 11 Format

Block 1 Words	Name	Description
1–30	**	**SAD ID (see Section 3.3.7.1)
31–38	TIRCALCCS	CDA time IR calibration coefficients calculated
39–46	THETIME	CDA time of current limits set
47–54	TCVNCS	CDA time current visible NLUTs created
55–62	TLLREG	CDA time of latest linear regression
63–72	SPLDCAF*	Spacelook data critical alarm flags (See Table 3-33 for definitions of alarm flags in words 63–134) SPLDCAF_P0 - P75
73–82	BBDCAFS*	BB data critical alarm flags BBDCAFS_P0 - P71
83–84	TEMPCAFS*	Temperature critical alarm flags TEMPCAFS_P0 - P9
85–94	BSEEALARMCAF*	SEE critical alarm flags BSEEALARMCAF_P0 - P71
95–104	MRATCAF*	(2 x 5) IR detector M gain rate alarms MRATCAF_P0 - P71
105–114	MOUTCAF*	(2 x 5) IR detector M gain outlier alarms MOUTCAF_P0 - P113
115–124	MSEEALARMCAF*	(2 x 5) IR detector M gain SEE alarms MSEEALARMCAF_P0 - P123
125–134	MRSSCAF*	(2 x 5) IR detector M gain RSS alarms MRSSCAF_P1 - P71
135	FWPALA	Filter Wheel period alarm (= x ‘FF’ if a synch loss occurred since the last report)
136	BBTGAFS	BB temperature gradient alarm flag (= x ‘FF’ if excessive σ in 8 BB temperatures)
137–146	MRATLAF*	(2 x 5) IR detector M gain rate low alarms MRATLAF_P0 - P71
147	SCANMIR	Scan mirror temperature out-of-range at BB-Cal (= 255 if true)
148–209		Spares – not used
210	TRIGEVT	Triggering event: 0 = spacelook, 255 = BB
211–218	TIMETRIGGER	CDA time of triggering event (see notes)
219		Spares – not used
220	LEFTRIGHT	Spacelook side active: 0 = West, 255 = East
221	ELECSIDE	Electronics side active: 0 = Side 1, 255 = Side 2
222	PXOR45	Longitudinal parity (XOR) of words 1–221
Sounder Calibration Data		
223–510	IRDETBIA*	(4 x 72) IR detector biases IRDETBIA_P0 - P71
511–798	IRDET1OG*	(4 x 72) IR detector first-order gains IRDET1OG_P0 - P71
799–1086	IRDET2OG*	(4 x 72) IR detector second-order gains IRDET2OG_P0 - P71
1087–1374	IRDETBRS*	(4 x 72) IR detector bias regression slopes (ks) IRDETBRS_P0 - P71

Sounder Calibration Data (Cont.)		
Block 1 Words	**Name**	**Description**
1375–1662	IRDETBRI*	(4 x 72) IR detector bias regression intercepts (hs) IRDETBRI_P0 - P71
1663–1950	IRDETBSE*	(4 x 72) IR detector bias SEE IRDETBSE_P0 - P71
1951–1954	WMBBTS	(4 x 1) Weighted mean BB temperature
1955–1958	WMBPTS	(4 x 1) Weighted mean baseplate temperature
1959–1962	WMEOTS	(4 x 1) Weighted mean optics temperature
1963–1966	SMPATS	(4 x 1) Smoothed patch temperature
1967–1970	AVFWRS	(4 x 1) Average filter wheel rate (revolutions per second)
1971–1974	CSG8BBTS	(4 x 1) Current σ of 8 BB temperatures
1975–1978	CSGTBBS	(4 x 1) Current σ tolerance for BB
1979–2010	BBTWFS*	(4 x 8) BB thermistor weighting factors BBTWFS_P0 - P7
2011–2034	BPTWFS*	(4 x 6) Baseplate thermistor weighting factors BPTWFS_P0 - P5
2035–2062	OTWFS*	(4 x 7) Optics temperature weighting factors OTWFS_P0 - P6
2063–2066	CAWMHDS	(4 x 1) Current *a* weight for M-history data
2067–2070	CBWMHDS	(4 x 1) Current *b* weight for M-history data
2071–2074	CCWMHDS	(4 x 1) Current *c* weight for M-history data
2075–2078	CDWMHDS	(4 x 1) Current d weight for M-history data
2079–2094	BBTFSSS*	(2 x 8) BB thermistor filtered sample size BBTFSSS_P0 - P7
2095	BBTWSS	BB thermistor window size N
2096	CPTCLS	Current patch temperature control level [1:7] (See Note 6 for Table 3-30.)
2097	IRCALBMS	IR calibration B (bias) mode [1:2]
2098	IRCALMMS	IR calibration M (first-order gain) mode [1:7]
2099	IRCALQMS	IR calibration Q (second-order gain) mode [1:3]
2100	VRNORMDS	Visible reference normalization detector
2101	MHWWHS	M-history window width; in hours [1:24]
2102	MHWDDS	M-history window depth; in days [1:10]
2103–2129	MHROCSS	M-history regression optical component selectors
2130	EWCEDS	E-W correction enabled or disabled (0 = disabled, 255 = enabled)
2131–2134	SMTMPBC	(4 x 1) Scan mirror temperature at BB-Cal
2135–2206	CAECACME*	(4 x 18) Current *a* emissivity coefficients (intercept) CAECACMEIR1 - 18
2207–2278	CBECACMEIR1*	(4 x 18) Current *b* emissivity coefficients (first-order) CBECACMEIR1 - 18
2279–2350	CCECACMEIR1*	(4 x 18) Current *c* emissivity coefficients (second-order) CCECACMEIR1 - 18
2351–2781		Not assigned (set to zeros)
2782	PXOR46	Longitudinal parity (XOR) of words 223–2781

Block 1 Words	Name	Description
Sounder Telemetry Warning Limits		
2783–2910	MFSSLS*	(2 x 64) Minimum filtered sample size limit MFSSLS_P0 - P30
2911–3038	P30P30 LPFLCCS*	(2 x 64) Low pass filter limit – counts LPFLCCS_P0 - P30
3039–3166	HPFLCCS*	(2 x 64) High pass filter limit – counts HPFLCCS_P0 - P30
3167–3422	UFMELLS*	(4 x 64) Unfiltered mean low limit – counts UFMELLS_P0 - P30
3423–3678	FMELLS*	(4 x 64) Filtered mean low limit – counts FMELLS_P0 - P30
3679–3934	UFMEHLS*	(4 x 64) Unfiltered mean high limit – counts UFMEHLS_P0 - P30
3935–4190	FMEHLS*	(4 x 64) Filtered mean high limit – counts FMEHLS_P0 - P30
4191–4446	UFSGHLS*	(4 x 64) Unfiltered σ high limit – counts UFSGHLS_P0 - P30
4447–4702	FSGHLS*	(4 x 64) Filtered σ high limit – counts FSGHLS_P0 - P30
4703–4958	FMELLEUS*	(4 x 64) Filtered mean low limit – engineering units FMELLEUS_P0 - P30
4959–5214	FMEHLEUS*	(4 x 64) Filtered mean high limit – engineering units FMEHLEUS_P0 - P30
5215–5470	FSGHLEUS*	(4 x 64) Filtered σ high limit – engineering units FSGHLEUS_P0 - P30
Sounder Telemetry Critical Alarm Limits		
5471–5534	MNFSSS*	(2 x 32) Minimum filtered sample size limits MNFSSS_P0 - P26
5535–5662	FMELLSEUS*	(4 x 32) Filtered mean low limits – engineering units FMELLSEUS_P0 - P26
5663–5790	FMEHLSEUS*	(4 x 32) Filtered mean high limits – engineering units FMEHLSEUS_P0 - P26
5791–5918	FSGLSEUS*	(4 x 32) Filtered σ limits – engineering units FSGLSEUS_P0 - P26
5919	PXOR47	Longitudinal parity (XOR) of words 2783–5918
5920–6110		Unused – zeroes
Sounder ECAL Warning Limits		
6111–6114	EXRRLS	(4 x 1) Excessive residual RMS limit (all detectors)
6115–6146	VISLLSS*	(2 x 16) Visible low limits/step – counts VISLLSS_P0 - P15
6147–6178	ILWLLSS*	(2 x 16) IR Long wave low limits/step – counts ILWLLSS_P0 - P15
6179–6210	IMWLLSS*	(2 x 16) IR Medium wave low limits/step – counts IMWLLSS_P0 - P15
6211–6242	ISWLLSS*	(2 x 16) IR Short wave low limits/step – counts ISWLLSS_P0 - P15

Sounder ECAL Warning Limits (Cont.)		
Block 1 Words	**Name**	**Description**
6243–6274	VISHLSS*	(2 x 16) Visible high limits/step – counts VISHLSS_P0 - P15
6275–6306	ILWHLSS*	(2 x 16) IR Long wave high limits/step – counts ILWHLSS_P0 - P15
6307–6338	IMWHLSS*	(2 x 16) IR Medium wave high limits/step – counts IMWHLSS_P0 - P15
6339–6370	ISWHLSS*	(2 x 16) IR Short wave high limits/step – counts ISWHLSS_P0 - P15
6371–6402	MNFSLDS*	(2 x 16) Minimum filtered samples limit or detector (equals 1) MNFSLDS_P0 - P15
6403–6418	CAADSDS*	(1x16) Channel assigned as data source or detector CAADSDS_P0- P15
6419	PXOR48	Longitudinal parity (XOR) of words 6111–6418
6420–8040		Unused – zeroes
Block 2 Words	**Name**	**Description**
1–30	**	**SAD ID (see Section 3.3.7.1)
31–38	CDAIRCC	CDA time IR coefficients calculated
39–46	CDATCLS	CDA time of current limits set
47–54	CDACVNC	CDA time current visible NLUTs created
55–222		Spares – not used
Sounder Spacelook Warning Limits		
223–374	MNFSSLSL*	(2 x 76) Minimum filtered sample size limit MNFSSLSL_P0 - 75
375–526	LOWFILLIMSL*	(2 x 76) Low filter limit – counts LOWFILLIMSL_P0 - 75
527–678	HIFILISL*	(2 x 76) High filter limit – counts HIFILISL_P0 - 75
679–982	UNFIMELLSL*	(4 x 76) Unfiltered mean low limit – counts UNFIMELLSL_P0 - 75
983–1286	FIMELLSL*	(4 x 76) Filtered mean low limit – counts FIMELLSL_P0 - 75
1287–1590	UNFIMEHLSL*	(4 x 76) Unfiltered mean high limit – counts UNFIMEHLSL_P0 - 75
1591–1894	FIMEHLSL*	(4 x 76) Filtered mean high limit – counts FIMEHLSL_P0 - 75
1895–2198	UNFISGHLSL*	(4 x 76) Unfiltered σ high limit – counts UNFISGHLSL_P0 - 75
2199–2502	FISGHLSL*	(4 x 76) Filtered σ high limit – counts FISGHLSL_P0 - 75
2503–2790	FISGHLRSL*	(4 x 72) Filtered IR σ high limit – radiance FISGHLRSL_P0 - 71
2791-3078	FISGHLTSL*	(4 x 72) Filtered IR σ high limit – temperature FISGHLTSL_P0 - 71

Block 2 Words	Name	Description
Sounder Spacelook Critical Limits		
3079–3230	MNFILSSCSL*	(2 x 76) Minimum filtered sample size/detector MNFILSSCSL_P0 - 75
3231	PXOR49	Longitudinal parity (XOR) of words 223–3230
3232–3538		Unused – zeroes
Sounder BB Warning Limits		
3539–3682	MNFSSLBB*	(2 x 72) Minimum filtered sample size limits MNFSSLBB_P0 - 71
3683–3826	LOWFILLIMBB*	(2 x 72) Low filter limit – counts LOWFILLIMBB _P0-71
3827–3970	HIFILIBB *	(2 x 72) High filter limit – counts HIFILIBB P0-71
3971–4258	UNFIMELLBB*	(4 x 72) Unfiltered mean low limit – counts UNFIMELLBB_P0-71
4259–4546	FIMELLBB *	(4 x 72) Filtered mean low limit – counts FIMELLBB _P0-71
4547–4834	UNFIMEHLBB*	(4 x 72) Unfiltered mean high limit – counts UNFIMEHLBB_ P0-71
4835–5122	FIMEHLBB*	(4 x 72) Filtered mean high limit – counts FIMEHLBB _P0-71
5123–5410	UNFISGHLBB*	(4 x 72) Unfiltered σ high limit – counts FISGHLRBB_P0-71
5411–5698	FISGHLBB*	(4 x 72) Filtered σ high limit – counts FISGHLBB_P0-71
5699–5986	FISGHLRBB*	(4 x 72) Filtered σ high limit – radiance FISGHLRBB_P0-71
5987–6274	FISGHLTBB*	(4 x 72) Filtered σ high limit – temperature FISGHLTBB_P0-71
Sounder BB-Cal Critical Limits		
6275–6418	MNFILSSCBB*	(2 x 72) Minimum filtered sample size or CDET MNFILSSCBB_P0-71
Sounder Linear Regression Critical Limit		
6419–6422	MAXSEEALARMS	(4 x 1) Maximum SEE
Sounder Calibration Critical Limits		
6423–6426	MAXBPTGLS	(4 x 1) Maximum baseplate temperature for gain LUT
6427–6430	MINBPTGLS	(4 x 1) Minimum baseplate temperature for gain LUT
6431–6432	MINFSSBTS	(2 x 1) Minimum filtered sample size/BB thermistor
6433–6434		Unassigned – zeros
6435–6722	MAXRMM2*	(4 x 72) Maximum rate in M modes 2 MAXRMM2_P0-71
6723–6726	MAXPOMM35S	(4 x 1) Maximum percentage of outliers in M modes 3, 5
6727–7014	MAXSEM45S*	(4 x 72) Maximum standard error in M modes 4, 5 MAXSEM45S_P0-71
7015–7302	MAXRSSE67S*	(4 x 72) Maximum RSS error in modes 6, 7 MAXRSSE67S_P0-71

Sounder Calibration Critical Limits (Cont.)		
Block 2 Words	**Name**	**Description**
7303–7306	NSIG	(4 x 1) N-σ tolerance for M-history filtering
7307–7310	MAXHIST	(4 x 1) Maximum number of history data iterations
7311–7314	MINBBMIN	(4 x 1) Minimum number of minutes between BB-Cal
7315–7318	MVALUP	(4 x 1) M value update interval in 2-minute marks
7319–7322	MINDPATCH	(4 x 1) Minimum delta patch temperature for M modes 2
7323–7610	MINDELGAIN*	(4 x 72) Minimum delta gain for M mode 2 MINDELGAIN_P0-71
7611–7898	MINRATE*	(4 x 72) Minimum rate (slope) in M mode 2 MINRATE_P0-71
7899–7901		Unassigned – zeros
7902	PXOR50	Longitudinal parity (XOR) of words 3539–7901
7903–8040		Unused – zeroes

Notes:

1. This Block 11 format sequence is produced following every spacelook and BB-Cal sequence. The trigger time in words 211–218 is the time associated with the first raw data block of the triggering event, spacelook or BB.
2. All arrays of size 4 x *N* are floating point value arrays.
3. All arrays of size *N* x 72 apply to the IR CDET groups and are ordered channel 1, detector 1 to channel 18, detector 4, respectively. Arrays having a size of *N* x 76 include data for the channel 19, visible detectors 1–4.
4. Detector 1, as identified in GVAR , refers to the top left detector in the radiometric detector array (see Figure 3-9). Note that in ITT documentation detector 1 refers to the bottom-right detector and detector 4 refers to the top-left detector.

Included with each IR calibration coefficients set is a series of critical alarm flags. The flags are used to denote the occurrence of any condition which prohibits the normal calibration computation sequence for one or more detectors. These flags are defined in Table 3-32 and Table 3-33 for the Imager and Sounder, respectively.

Table 3-32. Imager Calibration Critical Alarm Flag Definitions

Critical alarm flags for Imager spacelook, words 57–59, and BB-Cal, words 60–62, data are defined as follows:	
Bits	**Set True(1) if Critical Condition is Present**
1	Visible detector 1 insufficient samples
2	Visible detector 2 insufficient samples
3	Visible detector 3 insufficient samples
4	Visible detector 4 insufficient samples
5	Visible detector 5 insufficient samples
6	Visible detector 6 insufficient samples
7	Visible detector 7 insufficient samples
8	Visible detector 8 insufficient samples
9	Unassigned (always 0)
10	IR side 1 detector 1 insufficient samples
11	IR side 1 detector 2 insufficient samples
12	IR side 1 detector 3 insufficient samples
13	IR side 1 detector 4 insufficient samples
14	IR side 1 detector 5 insufficient samples
15	IR side 1 detector 6 insufficient samples
16	IR side 1 detector 7 insufficient samples
17	Unassigned (always 0)
18	IR side 2 detector 1 insufficient samples
19	IR side 2 detector 2 insufficient samples
20	IR side 2 detector 3 insufficient samples
21	IR side 2 detector 4 insufficient samples
22	IR side 2 detector 5 insufficient samples
23	IR side 2 detector 6 insufficient samples
24	IR side 2 detector 7 insufficient samples

Notes:

1. The flag bits are numbered 1 – 24, where bit 1 is the MSB of the first word and bit 24 is the LSB of the third word. Each flag bit is set to one if the associated condition is true; otherwise, it is set to zero.
2. Only one instrument side can be active at any one time, as indicated by Table 3-30, word 221. The inactive side flag bits above are always reset to zero.
3. A Block 11, formatted according to Table 3-30, can result from either a spacelook or a BB event, as indicated in word 210. If word 210 indicates a spacelook trigger, the BB critical alarm flags in words 60–62 are not used and are set to zeros. If word 210 indicates a BB event, the critical alarm flags in words 57–59 are not used and set to zeros.
4. Note that bits 1 – 8 are the visible detector flags, are not applicable for BB-Cal and are always set to zero (see words 60 – 62). Following is added for GOES-O 8th detector information:

   Word 7411 and 7412 for Imager Calibration Limits Block11 (Table 3-30)

   Word 227 for Imager Spacelook Block11 Block#7 (Table 3-24)

   Word 225 for Imager Blackbody Blcok11 Block#3 (Table 3-28)

Bit	Set True (1) if critical condition is present
1	Unassigned (always 0)
2	Unassigned (always 0)
3	Unassigned (always 0)
4	Unassigned (always 0)
5	Unassigned (always 0)
6	Unassigned (always 0)
7	IR side2 detector 8 insufficient samples
8	IR side1 detector 8 insufficient samples

Critical alarm flags for Imager temperature values affect detector calibration and are defined as follows (see words 63–64):

Bits	Set True(1) if Critical Condition is Present
1	BB Thermistor 1 insufficient samples
2	BB Thermistor 2 insufficient samples
3	BB Thermistor 3 insufficient samples
4	BB Thermistor 4 insufficient samples
5	BB Thermistor 5 insufficient samples
6	BB Thermistor 6 insufficient samples
7	BB Thermistor 7 insufficient samples
8	BB Thermistor 8 insufficient samples
9	Baseplate Temperature too low for LUT usage
10	Baseplate Temperature too high for LUT usage
11–16	Spares – not used

Notes:

1. Critical alarm-flag bits are numbered 1 – 16, with bit 1 the MSB of the first word and bit 16 the LSB of the second word. Each flag bit is set to one if the associated condition is true; otherwise, it is set to zero. Limits defined in Table 3-30, words 7183–7192, are employed in determining the above temperature alarms.
2. The BB thermistor flag bits are enabled only for a report triggered by a BB-Cal; they are always reset to zeros for reports triggered by a spacelook. The samples referenced by these bits are maintained in a moving window within the SPS and are not directly reported within the GVAR stream. The samples are evaluated at the occurrence of a BB-Cal sequence.
3. Baseplate temperature flag bits are enabled only for a report triggered by a spacelook calibration; they are always reset to zeros for reports triggered by a BB event. The baseplate temperature filtered mean values reported in the telemetry statistics Block 11 associated with the spacelook are used to form a weighted mean baseplate temperature. This weighted mean value is used in controlling the temperature flag bits.

Critical alarm flags for first-order gain computations, words 65–71, are defined as follows:

Bits	Set True(1) if Critical Condition is Present
1	Maximum gain rate exceeded, mode 2
2	Maximum percentage of outliers exceeded, modes 3, 5,
3	Maximum standard error exceeded, modes 4, 5,
4	Maximum RSS error exceeded, modes 6, 7,
5	Gain rate below minimum, mode 2
6-8	Unassigned – always zero

Notes:

1. The critical alarm flag bits are numbered 1 – 8, with bit 1 assigned to the MSB of the word and bit 8 to the LSB. Each flag bit is set to one if the associated condition is true; otherwise, it is set to zero.
2. The seven-flag words, 65 – 71, are sequentially assigned to the seven active IR detectors using the mapping defined in Figure 3-15 and Figure 3-16.

Table 3-33. Sounder Calibration Critical Alarm Flag Definitions

Critical Alarm flags for Sounder spacelook, words 63–72, and BB data, words 73–82, are defined as follows: Spacelook words 63–64, 65–66, 67–68, 69–70, 71–72 BB words 73–74, 75–76, 77–78, 79–80, 81–82	
Flag	**Set True (1) if an Insufficient Sample Condition is Present**
1	1 detector – Channels 1, 5, 9, 13, 17
2	2 detector – Channels 1, 5, 9, 13, 17
3	3 detector – Channels 1, 5, 9, 13, 17
4	4 detector – Channels 1, 5, 9, 13, 17
5	1 detector – Channels 2, 6, 10, 14, 18
6	2 detector – Channels 2, 6, 10, 14, 18
7	3 detector – Channels 2, 6, 10, 14, 18
8	4 detector – Channels 2, 6, 10, 14, 18
9	1 detector – Channels 3, 7, 11, 15, 19
10	2 detector – Channels 3, 7, 11, 15, 19
11	3 detector – Channels 3, 7, 11, 15, 19
12	4 detector – Channels 3, 7, 11, 15, 19
13	1 detector – Channels 4, 8, 12, 16
14	2 detector – Channels 4, 8, 12, 16
15	3 detector – Channels 4, 8, 12, 16
16	4 detector – Channels 4, 8, 12, 16

Notes:

1. Detectors 1 – 4 for Channels 1, 2, 3, and 4 are assigned to flag bits 1 – 16 in words 63 and 64 for spacelook data and words 73 and 74 for BB data.
2. The four Channel 19 visible detectors are not included as part of the BB-Cal sequence. As a result, their flag bits, 9 – 12, are always zeroed for the BB case, words 81 and 82. Also, the last four flag bits, 13 – 16, in words 71, 72, 81 and 82, are not used and are always zero.

Temperature critical alarm flags, words 83–84, are defined as follows:	
Flag	**Set True (1) if Critical Condition is Present**
1	BB Thermistor 1 insufficient samples
2	BB Thermistor 2 insufficient samples
3	BB Thermistor 3 insufficient samples
4	BB Thermistor 4 insufficient samples
5	BB Thermistor 5 insufficient samples
6	BB Thermistor 6 insufficient samples
7	BB Thermistor 7 insufficient samples
8	BB Thermistor 8 insufficient samples
9	Baseplate Temperature too low for LUT usage
10	Baseplate Temperature too high for LUT usage
11-16	Spares – not used

Notes:

The critical alarm flag bits are numbered 1 – 16, with bit 1 the MSB of the first word and bit 16 the LSB of the second word. Notes and comments associated with the Imager temperature critical alarm flags in Table 3-32 apply, except that the limits used in the temperature alarms are defined in Table 3-31, words 6423 – 6432.

Critical alarm flags for bias (B) and first-order gain (M) computations are defined as follows:	
Alarm Condition	**Words**
B SEE	85–86, 87–88, 89–90, 91–92, 93–94
M rate	95–96, 97–98, 99–100, 101–102, 103–104
M outliers	105–106, 107–108, 109–110, 111–112, 113–114
M SEE	115–116, 117–118, 119–120, 121–122, 123–124
M RSS	125–126, 127–128, 129–130, 131–132, 133–134
Flag	**Set True (1) if the see too High Condition is Present**
1	Detector 1 – Channels 1, 5, 9, 13, 17
2	Detector 2 – Channels 1, 5, 9, 13, 17
3	Detector 3 – Channels 1, 5, 9, 13, 17
4	Detector 4 – Channels 1, 5, 9, 13, 17
5	Detector 1 – Channels 2, 6, 10, 14, 18
6	Detector 2 – Channels 2, 6, 10, 14, 18
7	Detector 3 – Channels 2, 6, 10, 14, 18
8	Detector 4 – Channels 2, 6, 10, 14, 18
9	Detector 1 – Channels 3, 7, 11, 15
10	Detector 2 – Channels 3, 7, 11 ,15
11	Detector 3 – Channels 3, 7, 11, 15
12	Detector 4 – Channels 3, 7, 11, 15
13	Detector 1 – Channels 4, 8, 12, 16
14	Detector 2 – Channels 4, 8, 12, 16
15	Detector 3 – Channels 4, 8, 12, 16
16	Detector 4 – Channels 4, 8, 12, 16

Notes:

The last eight flag bits, 9 – 16, assigned to each alarm condition, words 94, 104, 114, 124, and 134, are not used and are always zero.

3.3.7.10 Visible Detector NLUTs

Data from the Imager and Sounder visible detectors are converted to destriped pixel imagery by the SPS through the use of NLUTs. The NLUTs are generated in the PMs and transmitted to the SPSs on an as needed basis. The instrument NLUTs currently in use are broadcast in GVAR following every BB-Cal event. The Block 11 formats employed are defined in Table 3-34 and Table 3-35 for the Imager and Sounder, respectively. The formats include CDA time tags denoting the NLUT creation time and the time at which the respective NLUT was enabled by the SPS. The creation time tag is reported in the scan documentation blocks to permit positive identification of the NLUT.

Table 3-34. Imager NLUT Block 11 Format

Block 1 Words	Name	Description
1–24	**	**SAD ID (see Section 3.3.7.1)
25		Unused – always zero
26–33	CDATIMEIRIM1	CDA time IR coefficients calculated
34–41	CDATIMEIRIM2	CDA time of current limits set
42–49	CDATIMEIRIM3	CDA time current visible NLUTs created
50–57	CDATIMEIRIM4	CDA time current visible NLUTs implemented
58	REFDETIDI	Reference detector ID (1 – 8)
59	DXOR1	Longitudinal parity (XOR) of detector 1 NLUT
60	DXOR2	Longitudinal parity (XOR) of detector 2 NLUT
61	DXOR3	Longitudinal parity (XOR) of detector 3 NLUT
62	DXOR4	Longitudinal parity (XOR) of detector 4 NLUT
63	DXOR52	Longitudinal parity (XOR) of words 1 - 62
64–1021		Spares – not used
1022–2045	DECT1NLUT	Detector 1 NLUT
2046–3069	DECT2NLUT	Detector 2 NLUT
3070–4093	DECT3NLUT	Detector 3 NLUT
4094–5117	DECT4NLUT	Detector 4 NLUT
5118–5125	OHDEAR1*	ASCII NLUT identification OHDEAR1_P0 - P7
5126–6432		Spares – not used
Block 2 Words	**Name**	**Description**
1-24	**	**SAD ID (see Section 3.3.7.1)
25		Unused – always zero
26–33	CDATIMEIRIM5	CDA time IR coefficients calculated
34–41	CDATIMEIRIM6	CDA time of current limits set
42–49	CDATIMEIRIM7	CDA time current visible NLUTs created
50–57	CDATIMEIRIM8	CDA time current visible NLUTs implemented
58	REFDETIDI2	Reference detector ID (1 – 8)
59	DXOR5	Longitudinal parity (XOR) of detector 5 NLUT
60	DXOR6	Longitudinal parity (XOR) of detector 6 NLUT
61	DXOR7	Longitudinal parity (XOR) of detector 7 NLUT
62	DXOR8	Longitudinal parity (XOR) of detector 8 NLUT
63	DXOR53	Longitudinal parity (XOR) of words 1 - 62
64–1021		Spares – not used
1022–2045	DECT5NLUT	Detector 5 NLUT
2046–3069	DECT6NLUT	Detector 6 NLUT
3070–4093	DECT7NLUT	Detector 7 NLUT
4094–5117	DECT8NLUT	Detector 8 NLUT
5118–5125	OHDEAR2*	ASCII NLUT identification OHDEAR2_P0 - P7
5126–6432		Spares – not used

Notes:

The Imager visible NLUTs use a 10-bit word length. They are broadcast in GVAR following every BB-Cal. The NLUTs are sequenced to follow the transmission of the BB-triggered calibration Block 11 (see Table 3-30).

Table 3-35. Sounder NLUT Block 11 Format

Words	Name	Description
1–30	**	**SAD ID (see Section 3.3.7.1)
31–38	CDATIMEIR_0	CDA time IR coefficients calculated
39–46	CDATIMELIMITS_0	CDA time of current limits set
47–54	CDATIMENLUT_0	CDA time current visible NLUTs created
55–62	LASTFORNOW_0	CDA time current visible NLUTs implemented
63	REFERENCE_0	Reference detector ID (1 – 4)
64	DETECXID_0	Detector X ID
65–66	DETECXWC_0	Detector X word count
67	DXORX_0	Longitudinal parity (XOR) of detector X NLUT
68	DETECYID_0	Detector Y ID
69–70	DETECYWC_0	Detector Y word count
71	DXORY_0	Longitudinal parity (XOR) of detector Y NLUT
72–73		Unused – zeroes
74	PXOR51_0	Longitudinal parity (XOR) of words 1 – 73

The Sounder visible detector NLUTs require 16,384 8-bit words of Block 11 transmission space for each detector. Between the four applicable detectors, a total of nine Block 11s are required to completely transfer the NLUTs. Words 1 – 74 of each of the nine blocks are defined above. Three of the required nine Block 11s contain portions of NLUTs for two detectors. The “X” ID in the header identifies the first detector (1, 2, or 3) along with a count of words. The “Y” ID identifies the second detector (2, 3, or 4) and also indicates the number of words. The longitudinal parity values are always computed over the entire 16,384 words of a detector’s NLUT. The nine Block 11s constituting the Sounder’s NLUTs are broadcast in GVAR following each Sounder BB-Cal.

Block 11 Sequence No.	Words	Name	Content Description
1	75–8040	D1NP1	Detector 1 NLUT words 1 – 7966
2	75–8040	D1NP2	Detector 1 NLUT words 7967 – 15932
3	75–526	D1NP3	Detector 1 NLUT words 15933 – 16384
3	527–8040	D2NP1	Detector 2 NLUT words 1 – 7514
4	75–8040	D2NP2	Detector 2 NLUT words 7515 – 15480
5	75–978	D2NP3	Detector 2 NLUT words 15481 – 16384
5	979–8040	D3NP1	Detector 3 NLUT words 1 – 7062
6	75–8040	D3NP2	Detector 3 NLUT words 7063 – 15028
7	75–1430	D3NP3	Detector 3 NLUT words 15029 – 16384
7	1431–8040	D4NP1	Detector 4 NLUT words 1 – 6610
8	75–8040	D4NP2	Detector 4 NLUT words 6611 – 14576
9	75–1882	D4NP3	Detector 4 NLUT words 14577 – 16384
9	1883–1890	ASCIINIDS	ASCII NLUT ID
9	1891–8040		Spares – not used

3.3.7.11 Star Sense Statistics and Data

Under nominal conditions the Imager and Sounder each perform a star sensing operation at a rate ranging from two to six times an hour. During a star sense the instrument is left positioned at a predetermined coordinate through which a star is expected to pass as the satellite revolves. The passage of the known star through the FOV of one or more of the instrument's 1 km visible detectors at a particular time provides a measurement of the instrument's attitude.

The statistics associated with each star sense are passed to the OATS for use in updating the instrument's O&A estimates. As a diagnostic aid, the star sense statistics, supporting calculation data, and the associated raw detector data are transferred in GVAR to the PM by way of a sequence of Block 11s. The format of the Imager and Sounder star sense Block 11 sequences are defined in Table 3-36 and Table 3-37, respectively. Section 3.7 details the algorithm employed for the star crossing analysis, providing further information about the terms employed in and Table 3-40.

The star sense Block 11 formats also contain edge detection data for the Moon's rim. The edge of the full Moon is "bright" in both the visible and IR channels, offering a fine target for measuring the E-W imaging detector misalignments. When Moon-shot data is transmitted, the Moon flag in word 1087 is non-zero. The channel flag, word 1088, is set to denote the radiometric channel being transmitted.

Table 3-36. Imager Star Sense Block 11 Format

Block 1 Words	Name	Description
1–30	**	**SAD ID (see Section 3.3.7.1)
31–38	CDASTARINT	CDA time star sense interval started
39–42	MILLISECONDS	Interval Duration (msec)
43–44	WHERENSC	Instrument Coordinates, N-S cycles
45–46	WHERENSI	Instrument Coordinates, N-S increments
47–48	WHEREEWC	Instrument Coordinates, E-W cycles
49–50	WHEREEWI	Instrument Coordinates, E-W increments
51–52	WSLAMW	W – Sample length of averaging moving window
53–54	FOURM	FOURM – number of raw pixels/SDI sample
Star Sense Controls, Statistics, and Results		
55–56	WTC	(2 x 1) window thresholding count (WTC)
57–58	ETC	(2 x 1) Event Thresholding Count (ETC)
59–74	DWT*	(2 x 8) Window Threshold Tolerance/Detector (DWT) DWT_P0-7
75–90	DMV*	(2 x 8) Interval Mean Value/Detector (DMV) DWV_P0-8
91–106	WTL*	(2 x 8) Window Threshold Level/Detector (WTL) WTL_P1-8
107–122	EVECOUNT*	(2 x 8) events counted/detector EVECOUNT_P1-8
123–124	NUMBERPIX	(2 x 1) number of pixels in each of Blocks 2–9
125–126	DATAFLAG	(2 x 1) data loss flag = 1 if break in star data
127–190	HIN*	(2 x 32) Hin – start of window raw data index HIN_P00-31
191–254	KIN*	(2 x 32) Kin – end of window raw data index KIN_ P00-31
255–318	WMV*	(2 x 32) Window Mean Value (WMV) WMV_P01-32
319–382	ETL	(2 x 32) Event Thresholding Level (ETL)
383–446	MIN	(2 x 32) Min – start of event raw data index
447–510	NIN	(2 x 32) Nin – end of event raw data index
511–574	EMV	(2 x 32) Event Mean Value (EMV)
575–638	NSSEEALARM	(2 x 32) N-S servo error at event
639–702	EWSEEALARM	(2 x 32) E-W servo error at event
703–766	TEVI*	(2 x 32) Star pixel event data index TEVI_P01-32
767–1022	TEVCDA*	(8 x 32) TEVCDA – CDA time of event TEVCDA_P01-32
1023–1086	EVENTDUR*	(2 x 32) Event duration (msec) EVENTDUR_P01-32
1087	MOONFLAG	(1 x 1) MOONFLAG (0 = star sense, 255 = Moon sense)
1088	MOONCHAN	(1 x 1) MOONCHAN (0 = star sense, 1 to 5 = Moon sense)
1089–1090		Spares – not used
1091–1122	DWTF*	(4 x 8) DWT – in floating point format DWTF_P1-8

Star Sense Controls, Statistics, and Results (Cont.)		
Block 1 Words	**Name**	**Description**
1123–1154	DMVF*	(4 x 8) DMV – in floating point format DMVF_P1-8
1155–1186	WTLF*	(4 x 8) WTL – in floating point format WTLF_P1-8
1187–1314	WMVF*	(4 x 32) WMV – in floating point format WMVF_P01-32
1315–1442	ETLF*	(4 x 32) ETL – in floating point format ETLF_P01-32
1443–1570	EMVF*	(4 x 32) EMV – in floating point format EMVF_P01-32
1571–1698	SDIMAX	(4 x 32) SDIMAX – maximum raw value
1699–1826	SDIFWHM	(4 x 32) SDIFWHM – full width half maximum value
1827	PXOR52	Longitudinal parity (XOR) of words 1 – 1826
1828–8040		Spares – not used

Blocks 2-9 Words	**Name**	**Description**
1–24	**	**SAD ID (see Section 3.3.7.1)
25–32	CDA_START_TIME*	CDA start time (from words 31 – 38 of block 1) CDA_START_TIME_1 - 8
33–6432	DET_STAR_PIXEL_DATA*	Detector [1–8] star pixel data DET_STAR_PIXEL_DATA_1 - 8

Notes:

1. Block 1 uses an 8-bit word format. With the exception of the CDA formatted time tags, all values in Block 1 are unsigned integers.
2. Blocks 2 – 9 use 10-bit word formats. Star pixel data in blocks 2 – 9 have 10 significant bits in the 10-bit words and are time-ordered with the oldest pixel first (word 33) in each array.

Table 3-37. Sounder Star Sense Block 11 Format

Block 1 Words	Name	Description
1–30	**	**SAD ID (see Section 3.3.7.1)
31–38	SCDASTARINT	CDA time star sense interval started
39–42	SMILLISECONDS	Interval duration (msec)
43–44	SWHERENSC	Instrument coordinates, N-S cycles
45–46	SWHERENSI	Instrument coordinates, N-S increments
47–48	SWHEREEWC	Instrument coordinates, E-W cycles
49–50	SWHEREEWI	Instrument coordinates, E-W increments
51–52	SWSLAMW	W – Sample length of averaging moving window
53–54		Unused - zeroes
Star Sense Controls, Statistics, and Results		
55–56	SWTC	(2 x 1) WTC
57–58	SETC	(2 x 1) ETC
59–74	SDWT*	(2 x 8) DWT SDWT_P0 - 7
75–90	SDMV*	(2 x 8) DMV SDMV_P0 - 7
91–106	SWTL*	(2 x 8) WTL SWTL_P0 - 7
107-122	SEVECOUNT*	(2 x 8) events counted/detector SEVECOUNT_P0 - 7
123-124	SNUMBERPIX	(2 x 1) number of pixels in each of blocks 2–9
125–126	SDATAFLAG	(2 x 1) data loss flag = 1 if break in star data
127–190	SHIN	(2 x 32) Hin – start of window raw data indice
191–254	SKIN	(2 x 32) Kin – end of window raw data indice
255–318	SWMV	(2 x 32) WMV
319–382	SETL	(2 x 32) ETL
383–446	SMIN	(2 x 32) Min – start of event raw data indice
447–510	SNIN	(2 x 32) Nin – end of event raw data indice
511–574	SEMV	(2 x 32) EMV
575–638	SNSSEEALARM	(2 x 32) N-S Servo Error at event
639–702	SEWSEEALARM	(2 x 32) E-W Servo Error at event
703–766	STEVI*	(2 x 32) TEVi – star pixel event data index STEVI_P01 - 32
767–1022	STEVCDA*	(8 x 32) TEVCDA – CDA time of event (TEV) STEVCDA_P01 - 32
1023–1086	SEVENTDUR*	(2 x 32) Event duration (msec) SEVENTDUR_P01 - 32
1087	SMOONFLAG	(1 x 1) MOONFLAG (0 = star sense, 255 = Moon sense)
1088	SMOONCHAN	(1 x 1) MOONCHAN (0 = star sense, 1 to 20 = Moon channel)
1089–1090		Spares – not used
1091–1122	SDWTF*	(4 x 8) DWT – in floating point format SDWT4_P0 - 7
1123–1154	SDMV4*	(4 x 8) DMV – in floating point format SDMV4_P0 - 7

Block 1 Words	Name	Description
1155–1186	SWTL4*	(4 x 8) WTL – in floating point format SWTL4_P0 - 7
1187–1314	SWMVF*	(4 x 32) WMV – in floating point format SWMVF_P01 - 32
1315–1442	SETLF*	(4 x 32) ETL – in floating point format SETLF_P01 - 32
1443–1570	SEMVF*	(4 x 32) EMV – in floating point format SEMVF_P01 - 32
1571–1698	SSDIMAX	(4 x 32) SDIMAX – maximum raw value
1699–1826	SSDIFWHM	(4 x 32) SDIFWHM – full width half maximum value
1827	PXOR53	Longitudinal parity (XOR) of words 1 – 1826
1828–8040		Spares – not used

Blocks 2-9 Words	Name	Description
1–30	**	**SAD ID (see Section 3.3.7.1)
31–38	CDA_START_TIME*	CDA start time from Block 1, words 31 – 38 CDA_START_TIME_S1 - 8
39–54		Spares – not used
55–5174	SPDFD*	Detector [1–8] star pixel data SPDFD1 - 8
5175–8040		Spares – not used

Notes:

All Sounder star sense Block 11s use an 8-bit word format. Star pixel data, Blocks 2 – 9, are ordered with oldest pixel first. Each star pixel has 13 significant bits, right-adjusted, and zero-filled within a two-word 16-bit field.

3.3.7.12 GIMTACS and SPS Text Message Format

A Block 11 format is also used for transmission of GIMTACS and SPS operator text messages to users. The format uses 8-bit words and the record format is straight 8-bit ASCII strings, one message per record. The record count in the SAD ID indicates the number of messages in the Block 11. Included at the beginning of each message is a 16-byte time tag formatted by the SPS as follows:

			1 1111	1	1
byteNo. :	1	2	3 4 567 89 0 1234	5	6
contents:	<CR>	<LF>	DDD:HH:MM:SS	<CR>	<LF>

where <CR> and <LF> indicate a carriage return and line feed character, respectively.

GIMTACS passes text messages to the SPS through a TCP/IP interface. GIMTACS text messages may be up to 11,866 characters in length, including the time tag. Large messages spanning more than one Block 11 are indicated by the first and last block flags and the block count in the SAD ID.

The SPS operator enters text messages through a keyboard using the SEND command. This command permits entry of messages that are up to 74 ASCII characters in length. The SPS normally sends the message by way of a Block 11 transfer as soon as entry is completed. The record length for SPS text messages is 90 characters, with the actual operator entered message (74 characters maximum) left-adjusted and blank filled following the 16-byte time tag. A limit of 10 SPS messages per Block 11 is observed.

Table 3-11 defines the SAD ID fields specifically related to the text message Block 11.

3.3.7.13 Fill Data Format

A fill data block is transmitted by the SPS whenever no other data blocks are ready for transmission. The fill data is nothing more than a block of 64,080 bits, each set to zero. This is packaged with an appropriate 240-bit SAD ID for transmission in the GVAR stream.

3.3.7.14 Imager Factory Coefficients

Starting with GOES-M, the Block 11 format is used for the transmission of factory measured calibration coefficients for each of the imaging detectors along with the misalignments of the detectors with respect to the instruments optical axis. The coefficients required to convert raw telemetry counts to engineering units are provided for those points employed during formation of GVAR data. This data also appears in block 0 for GOES M-N. For GOES O-P, the block 0 also contains the misalignments of the detector with respect to the instrument optical axis called detector offsets and the nadir positions, which are listed in Table 3-8. An Imager Factory Coefficients Block 11 will be sent at the start of the imager frame and at the lowest priority of all other Block 11's but just before "fill data block". The format of the Imager Factory Coefficients Block is defined in Table 3-38.

Table 3-38. Imager Factory Coefficients Block 11 Format (GOES-M and Beyond)

Word	Name	Description
1-30	**	**SAD ID
31-40		Spares – not used
41-41	F_IOFNC	Instrument nadir, North/South cycles
42-42	F_IOFEC	Instrument nadir, East/West cycles
43-44	F_IOFNI	Instrument nadir, North/South increments
45-46	F_IOFEI	Instrument nadir, East/West increments
47-48	F_VD1XO	Visible detector 1 x-offset
49-50	F_VD2XO	Visible detector 2 x-offset
51-52	F_VD3XO	Visible detector 3 x-offset
53-54	F_VD4XO	Visible detector 4 x-offset
55-56	F_VD5XO	Visible detector 5 x-offset
57-58	F_VD6XO	Visible detector 6 x-offset
59-60	F_VD7XO	Visible detector 7 x-offset
61-62	F_VD8XO	Visible detector 8 x-offset
63-64	F_PI1XO	Infrared detector 1 x-offset
65-66	F_PI2XO	Infrared detector 2 x-offset
67-68	F_PI3XO	Infrared detector 3 x-offset
69-70	F_PI4XO	Infrared detector 4 x-offset
71-72	F_PI5XO	Infrared detector 5 x-offset
73-74	F_PI6XO	Infrared detector 6 x-offset
75-76	F_PI7XO	Infrared detector 7 x-offset GOES O-P 8th IR det @1781
77-78	F_RI1XO	Redundant Infrared detector 1 x-offset
79-80	F_RI2XO	Redundant Infrared detector 2 x-offset

Word	Name	Description
81-82	F_RI3XO	Redundant Infrared detector 3 x-offset
83-84	F_RI4XO	Redundant Infrared detector 4 x-offset
85-86	F_RI5XO	Redundant Infrared detector 5 x-offset
87-88	F_RI6XO	Redundant Infrared detector 6 x-offset
89-90	F_RI7XO	Redundant Infrared detector 7 x-offset GOES O-P 8th (Redundant) IR det @1783
91-92	F_VD1YO	Visible detector 1 y-offset
93-94	F_VD2YO	Visible detector 2 y-offset
95-96	F_VD3YO	Visible detector 3 y-offset
97-98	F_VD4YO	Visible detector 4 y-offset
99-100	F_VD5YO	Visible detector 5 y-offset
101-102	F_VD6YO	Visible detector 6 y-offset
103-104	F_VD7YO	Visible detector 7 y-offset
105-106	F_VD8YO	Visible detector 8 y-offset
107-108	F_PI1YO	Infrared detector 1 y-offset
109-110	F_PI2YO	Infrared detector 2 y-offset
111-112	F_PI3YO	Infrared detector 3 y-offset
113-114	F_PI4YO	Infrared detector 4 y-offset
115-116	F_PI5YO	Infrared detector 5 y-offset
117-118	F_PI6YO	Infrared detector 6 y-offset
119-120	F_PI7YO	Infrared detector 7 y-offset GOES O-P 8th IR det @1785
121-122	F_RI1YO	Redundant Infrared detector 1 y-offset
123-124	F_RI2YO	Redundant Infrared detector 2 y-offset
125-126	F_RI3YO	Redundant Infrared detector 3 y-offset
127-128	F_RI4YO	Redundant Infrared detector 4 y-offset
129-130	F_RI5YO	Redundant Infrared detector 5 y-offset
131-132	F_RI6YO	Redundant Infrared detector 6 y-offset
133-134	F_RI7YO	Redundant Infrared detector 7 y-offset GOES O-P 8th (Redundant) IR det @1787
A set of characteristic response coefficients is provided for each of the 22 Imager detectors. The characteristic response coefficients are the initial calibration coefficients associated with the detectors. The scaling factors are used to generate a 10-bit value from each calibrated IR pixel. All entries are single precision floating point numbers. Each of the following arrays contains eight elements, one element per visible detector. The elements are ordered within each array in increasing physical detector number, with element 1 assigned to physical visible detector 1. This pattern continues for all the elements within each array.		
135-166	F_IVCRB*	Visible detectors characteristic response bias coefficients array. F_IVCRB_P0 - P7
167-198	F_IVCR1*	Visible detectors characteristic response first-order gain coefficients array. F_IVCR1_P0 - P7
199-230	F_IVCR2*	Visible detector characteristic response second-order gain coefficients array. F_IVCR2_P0 - P7
231-234	F_IVRAL	Visible detectors radiance-to-albedo conversion factor, one value for all eight detectors.

Word	Name	Description
In the following arrays the first five each contains 14 elements, one element per IR detector for the first seven (7) pairs of detectors. The first seven elements in each array apply to the seven side 1 (primary) detectors; the last seven, to the side 2 (redundant) detectors. Within each group of seven, the elements are ordered in the same 1–7 sense as follows: 1 – channel 2 North 2 – channel 2 South 3 – channel 3 North 4 – channel 3 South 5 – channel 4 North 6 – channel 4 South 7 – channel 6 For GOES-O and beyond, the data for the 8th IR detector is found starting at word 1781.		
235-290	F_IICRB*	Characteristic response bias coefficients F_IICRB_P0 - P13 GOES O-P 8th IR det @1791
291-346	F_IICR1*	Characteristic response first-order gain coefficients F_IICR1_P0 - P13 GOES O-P 8th IR det @1799
347-402	F_IICR2*	Characteristic response second-order gain coefficients F_IICR2_P0 - P13 GOES O-P 8th IR det @1807
403-458	F_IISFB*	Scale factors bias coefficients F_IISFB_P0 - P13 GOES O-P 8th IR det @1815
459-514	F_IISF1*	Scale factors first-order gain coefficients F_IISF1_P0 - P13 GOES O-P 8th IR det @1823
515-738	F_IG2IT*	Second gain interpolation table. This array contains 56 elements, 4 elements for each of the first 14 IR detectors. The first 28 elements apply to the side 1 detectors, the last 28 to side 2. Within each group of 28, the elements are sequentially ordered (in groups of four) in the same 1–7 sense defined previously. F_IG2IT_P0 - P55 GOES O-P 8th IR det @1831
739-754	F_IG2BP*	Second gain baseplate temperature interpolation pivot points. Four baseplate temperatures at which IG2IT gains were measured. Access this table with baseplate temperature to determine linear interpolation factors to use within IG2IT. F_IG2BP_P0 - P3
755-978	F_IBBTR*	BB temperature-to-target radiance conversion coefficients. An array of 56 elements, 4 elements for each of the 14 IR detectors. Elements are ordered in the same manner as described for IG2IT. F_IBBTR_P0 - P55 GOES O-P 8th IR det @1863
979-1002	F_IPRNG*	Patch temperature control ranges. An array of six elements, two elements for each of the three patch temperature control ranges. Each pair of elements defines the lower and upper temperature limit assigned to a patch control point. F_IPRNG_P0 - P5
1003-1102		Spares – not used
In the following section, conversion coefficients are provided for each telemetry point whose engineering units value is used for calibration or alarm monitoring functions by the SPS. Conversion factors of unused telemetry points may be acquired from reference document SJ-572022.		
1103-1106	F_IEL1A	Imager Electronics Temperature side No. 1 coefficients. Final letter of term name (A–F) denotes type. See Eq 3.6-5 and 3.6-6 for usage.
1107-1110	F_IEL1B	See the above description.

Word	Name	Description
1111-1114	F_IEL1C	See the above description.
1115-1118	F_IEL1D	See the above description.
1119-1122	F_IEL1E	See the above description.
1123-1126	F_IEL1F	See the above description.
The A-F naming convention used above with F_IEL1* is also used for the following thermistor terms:		
1127-1150	F_IEL2*	Imager electronics temp side 2 coefficients F_IEL2A-2F
1151-1174	F_IBP1*	Baseplate thermistor # 1 terms F_IBP1A-1F
1175-1198	F_IBP2*	Baseplate thermistor # 2 terms F_IBP2A-2F
1199-1222	F_IBP3*	Baseplate thermistor # 3 terms F_IBP3A-3F
1223-1246	F_IBP4*	Baseplate thermistor # 4 terms F_IBP4A-4F
1247-1270	F_IBP5*	Baseplate thermistor # 5 terms F_IBP5A-5F
1271-1294	F_IBP6*	Baseplate thermistor # 6 terms F_IBP6A-6F
1295-1318	F_IBB1*	Blackbody thermistor # 1 terms F_IBB1A-1F
1319-1342	F_IBB1*	Blackbody thermistor # 2 terms F_IBB2A-2F
1343-1366	F_IBB3*	Blackbody thermistor # 3 terms F_IBB3A-3F
1367-1390	F_IBB4*	Blackbody thermistor # 4 terms F_IBB4A-4F
1391-1414	F_IBB5*	Blackbody thermistor # 5 terms F_IBB5A-5F
1415-1438	F_IBB6*	Blackbody thermistor # 6 terms F_IBB6A-6F
1439-1462	F_IBB7*	Blackbody thermistor # 7 terms F_IBB7A-7F
1463-1486	F_IBB8*	Blackbody thermistor # 8 terms F_IBB8A-8F
1487-1510	F_IOP1*	Scan mirror thermistor terms F_IOP1A-1F
1511-1534	F_IOP2*	Primary mirror thermistor terms F_IOP2A-2F
1535-1558	F_IOP3*	Secondary mirror thermistor #1 terms F_IOP3A-3F
1559-1582	F_IOP4*	Secondary mirror thermistor #2 terms F_IOP4A-4F
1583-1606	F_IOP5*	Baffle thermistor #1 terms F_IOP5A-5F
1607-1630	F_IOP6*	Baffle thermistor #2 terms F_IOP6A-6F
1631-1654	F_IOP7*	Aft optics thermistor terms F_IOP7A-7F

Word	Name	Description
The next four telemetry points use the following mapping to convert raw counts to engineering units: Temp = A + BX + CX^2 + DX^3		
1655-1678	F_IOP8*	Cooler radiator PRT terms F_IOP8A-8F The last two terms (E-F) are set equal to zero.
1679-1702	F_IOP9*	Wide range IR detector PRT terms F_IOP9A-9F
1703-1726	F_IOPA*	Narrow range IR detector PRT terms F_IOPAA-AF
1727-1750	F_ICHT*	Cooler housing PRT terms F_ICHTA-TF
The remaining two telemetry points use a simple linear, gain and bias, mapping to convert raw counts to engineering units.		
1751-1758	F_IPVGB*	Patch control voltage Gain/Bias terms F_IPVGB_P0 - P1
1759-1766	F_IICGB*	Instrument current Gain/Bias terms F_IICGB_P0 - P1
1767-1780		Spares – not used
1781-1894 are used for the 8th detector for GOES-O and beyond ONLY. Otherwise they are spares.		
1781-1782	F_PI8XO	Infrared detector 8 x-offset (GOES–O and beyond, otherwise spare) GOES I-N IR dets 1-7 wd#63-76
1783-1784	F_RI8XO	Redundant Infrared detector 8 x-offset (GOES–O and beyond, otherwise spare) GOES I-N IR dets 1-7 wd#77-90
1785-1786	F_PI8YO	Infrared detector 8 y-offset (GOES–O and beyond, otherwise spare) GOES I-N IR dets 1-7 wd#107-120
1787-1788	F_RI8YO	Redundant Infrared detector 8 y-offset (GOES–O and beyond, otherwise spare) GOES I-N IR dets 1-7 wd#121-134
1789-1790		Spares – not used
1791-1798	F_IICRB*	Characteristic response bias coefficient for 8th IR detector (2 detectors [primary and redundant]) (GOES–O and beyond, otherwise spare) F_IICRB_P14 - P15. GOES I-N IR dets 1-7 wd#235-290
1799-1806	F_IICR1*	Characteristic response first-order gain coefficient for 8th IR detector (2 detectors [primary and redundant]) (GOES–O and beyond, otherwise spare) F_IICR1_P14 - P15. GOES I-N IR dets 1-7 wd#291-346
1807-1814	F_IICR2*	Characteristic response second-order gain coefficient for 8th IR detector (2 detectors [primary and redundant]) (GOES–O and beyond, otherwise spare) F_IICR2_P14 - P15. GOES I-N IR dets 1-7 wd#347-402
1815-1822	F_IISFB*	IR scaling bias for 8th IR Detector (GOES–O and beyond, otherwise spare) F_IISFB_P14 - P15. GOES I-N IR dets 1-7 wd#403-458
1823-1830	F_IISF1*	IR scaling gain (GOES–O and beyond, otherwise spare) FIISF1_P14 - P15. GOES I-N IR dets 1-7 wd#459-514
1831-1862	F_IG2IT*	IR 2nd order gains/temp table (GOES–O and beyond, otherwise spare) F_IG2IT_P56 - P71. GOES I-N IR dets 1-7 wd#515-738

Word	Name	Description
1863-1894	F_IBBTR*	BB temp-to-rad conversions (GOES–O and beyond, otherwise spare) F_IBBTR_P56 - P71. GOES I-N IR dets 1-7 wd#755-978
1895-8040		Spares – not used

3.4 Coordinate Systems

The scan mirror positioning for both instruments is controlled by two servo motors, one for the N-S elevation angle, outer gimbal motor, and one for the E-W scanning azimuth angle, inner gimbal motor. Each servo motor has an associated inductosyn to measure the mechanical shaft rotation angle. The position of the scanning mirror, and hence, the coordinate system employed for the instrument, is measured in terms of the inductosyn outputs.

The inductosyn outputs are expressed in terms of cycles and increments. Cycles, denoted C_x for E-W and C_y for N-S, are coarse measures of the shaft rotation angles. One cycle equals 2.8125° of mechanical rotation, or 128 cycles for one full 360° mechanical shaft revolution. Increments, denoted I_x for E-W and I_y for N-S, are finer shaft rotation angle measures that are different for each instrument. Each Imager cycle contains 6136 increments and is equal to approximately 8.0 (actually 7.999899) μradians of mechanical rotation. Each Sounder cycle contains 2805 increments and is equal to approximately 17.5 (actually 17.499959) μrads of mechanical rotation.

As a result of the manner in which the scanning mirrors have been gimbaled, the relationship between a given shaft mechanical angle and the corresponding image optical angle is not the same on both axes. In the N-S direction, the mechanical shaft angle is equal to the mirror's optical angle. Thus, a mechanical shaft rotation of one increment results in a one-increment change in the mirror's elevation angle. However in the E-W direction, a shaft angle change has a doubling effect upon the mirror's optical angle. This doubling effect means that a single increment of mechanical rotation causes a two-increment change in the scanning mirror's scan angle.

Figure 3-22 and Figure 3-23 illustrates the mapping between cycles and increments for the Imager's FOV in the nominal and Yaw-Flipped configurations. The origin of the coordinate system, zero cycles, zero increments, is defined to be the Northwest corner in the nominal configuration, or the Southeast corner in the Yaw-Flipped configuration. At a geosynchronous O&A, the Earth is positioned in the frame as indicated in the figures. Under these conditions, instrument nadir corresponds to the subsatellite point and has the coordinates denoted in Figure 3-22 and Figure 3-23. The actual nadir coordinate values may vary somewhat according to the results of the factory alignment. The true values are reported in the factory parameters section of the scan documentation block (see Table 3-6 [GOES I-N] or Table 3-38 [GOES M-P]).

The Imager mechanical limits (shown for the West, North (South for yaw-flipped), and East sides) are enforced by the presence of physical stops. The North (South for yaw-flipped) and West (East for yaw-flipped) stops prevent the instrument from ever reaching the origin point. On the South

(North for yaw-flipped) side, the scanning mirror is not constrained until 183° from nadir, permitting rotation of the mirror for BB viewing.

Figure 3-24 and Figure 3-25 illustrates the mapping between cycles and increments and the Sounder's FOV. The origin of the coordinate system (zero cycles, zero increments) is defined as the Southwest corner (nominal configuration) or Northeast corner (yaw-flipped). At a geosynchronous O&A, the Earth is positioned in the frame as indicated in Figure 3-24 and Figure 3-25. Under these conditions instrument nadir corresponds to the subsatellite point and has the coordinates denoted in the figures. As with the Imager, the true nadir coordinates may differ slightly from those indicated according to the results of the factory alignment. The actual values are reported in the factory parameters section of the Sounder scan documentation block (see Table 3-12).

The Sounder mechanical limits, shown for the West, South (North for yaw-flipped), and East sides, are enforced by the presence of physical stops. The South (North for yaw-flipped) and West (East for yaw-flipped) stops prevent the instrument from ever reaching the origin point. On the North (South for yaw-flipped) side, the scanning mirror is not constrained until 183° from nadir, permitting rotation of the mirror for BB viewing.

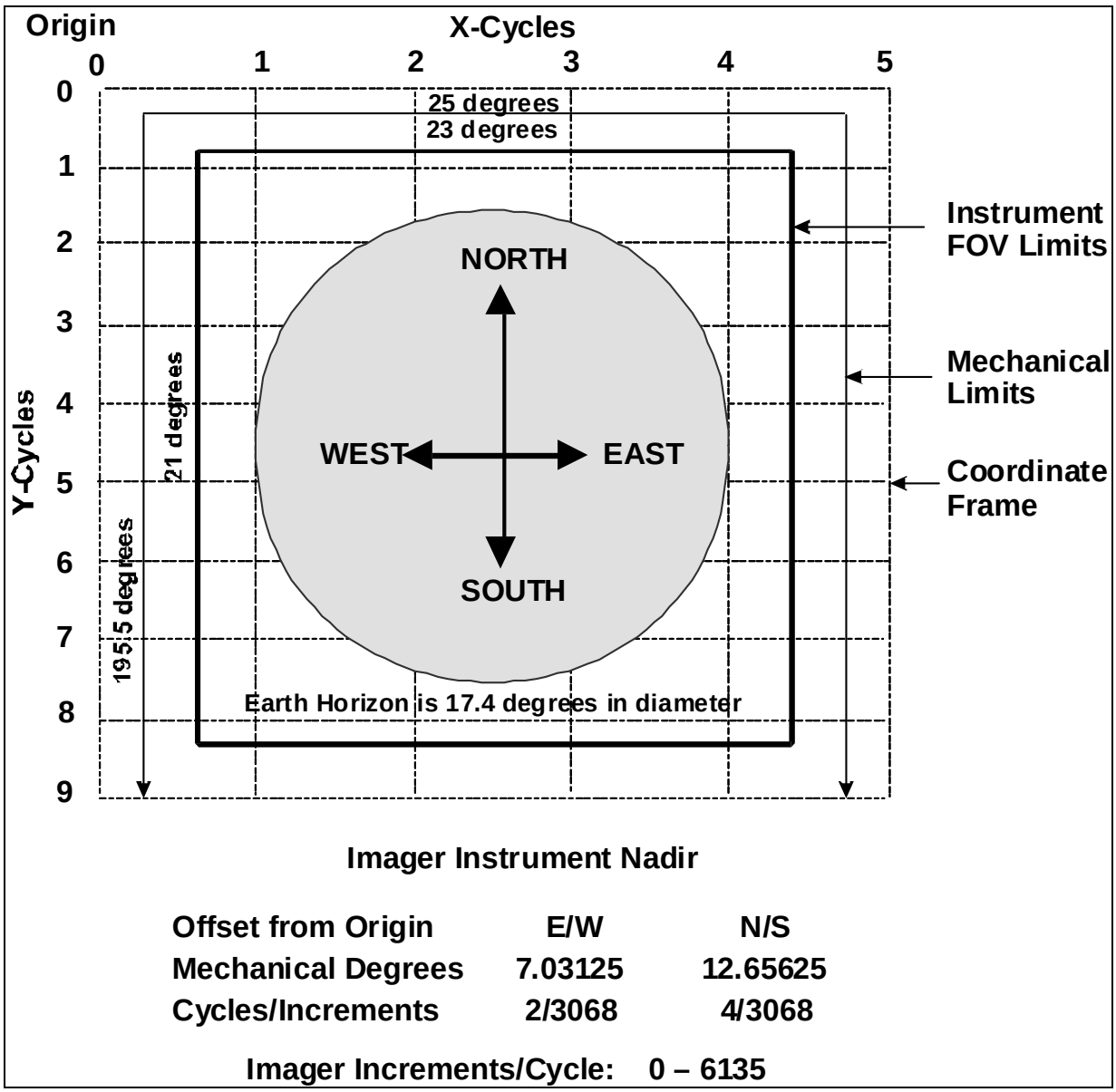

Figure 3-22. Imager Coordinate System (Nominal)

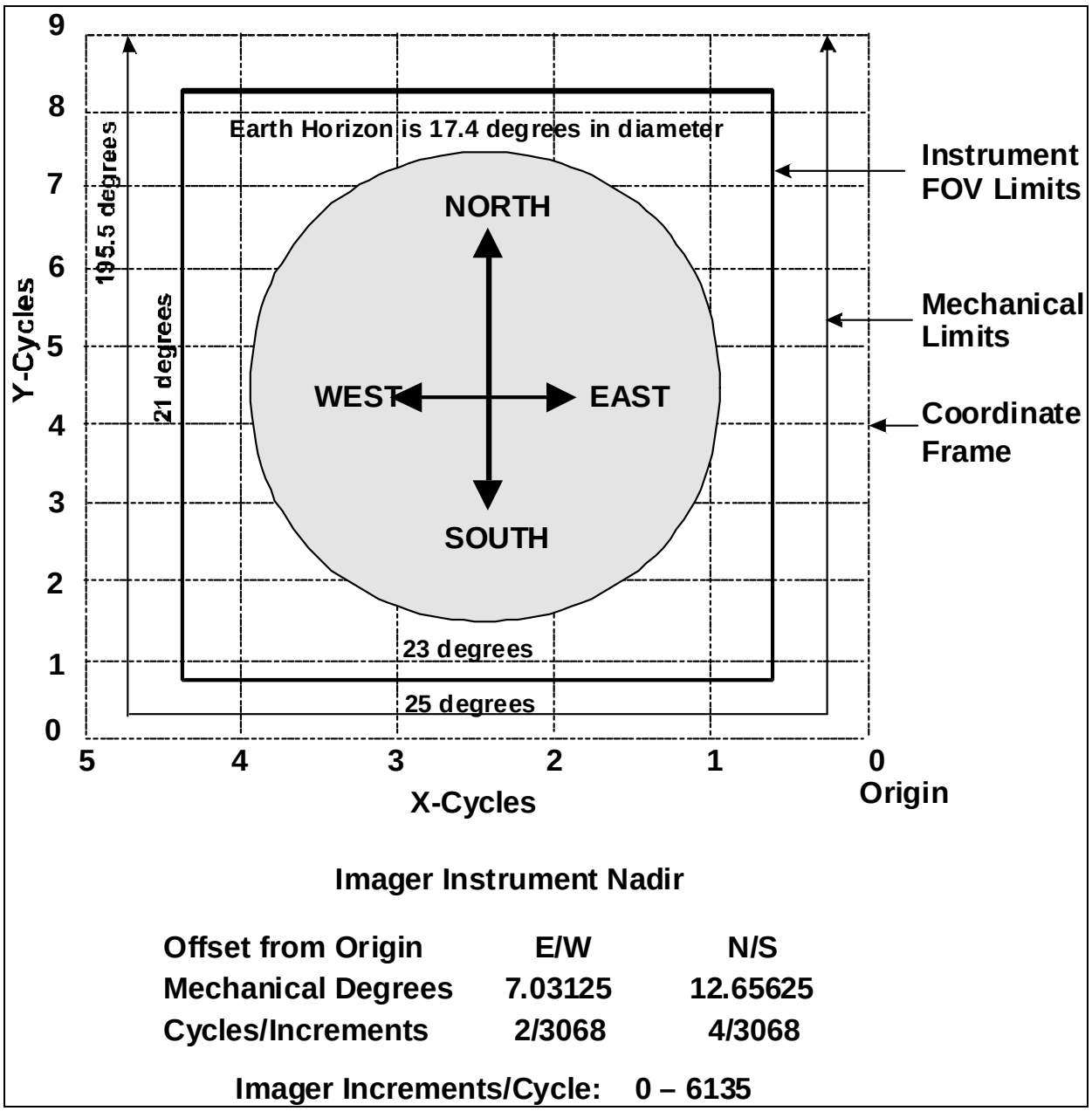

Figure 3-23. Imager Coordinate System (Yaw-Flipped)

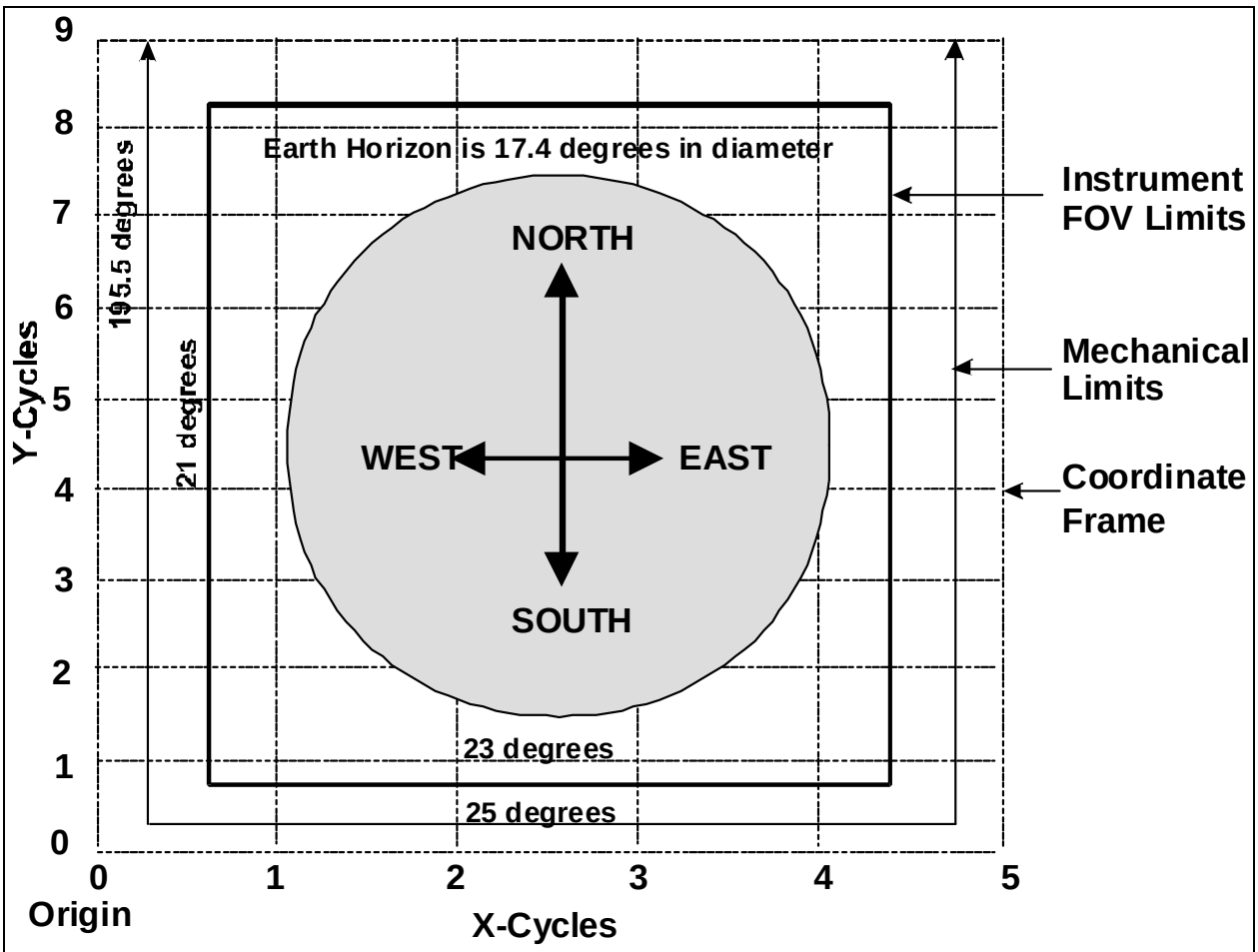

Sounder Instrument Nadir

Offset from Origin	E/W	N/S
Mechanical Degrees	7.03125	12.65625
Cycles/Increments	2/1402	4/1402

Sounder Increments/Cycle: 0 – 2804

Figure 3-24. Sounder Coordinate System (Nominal)

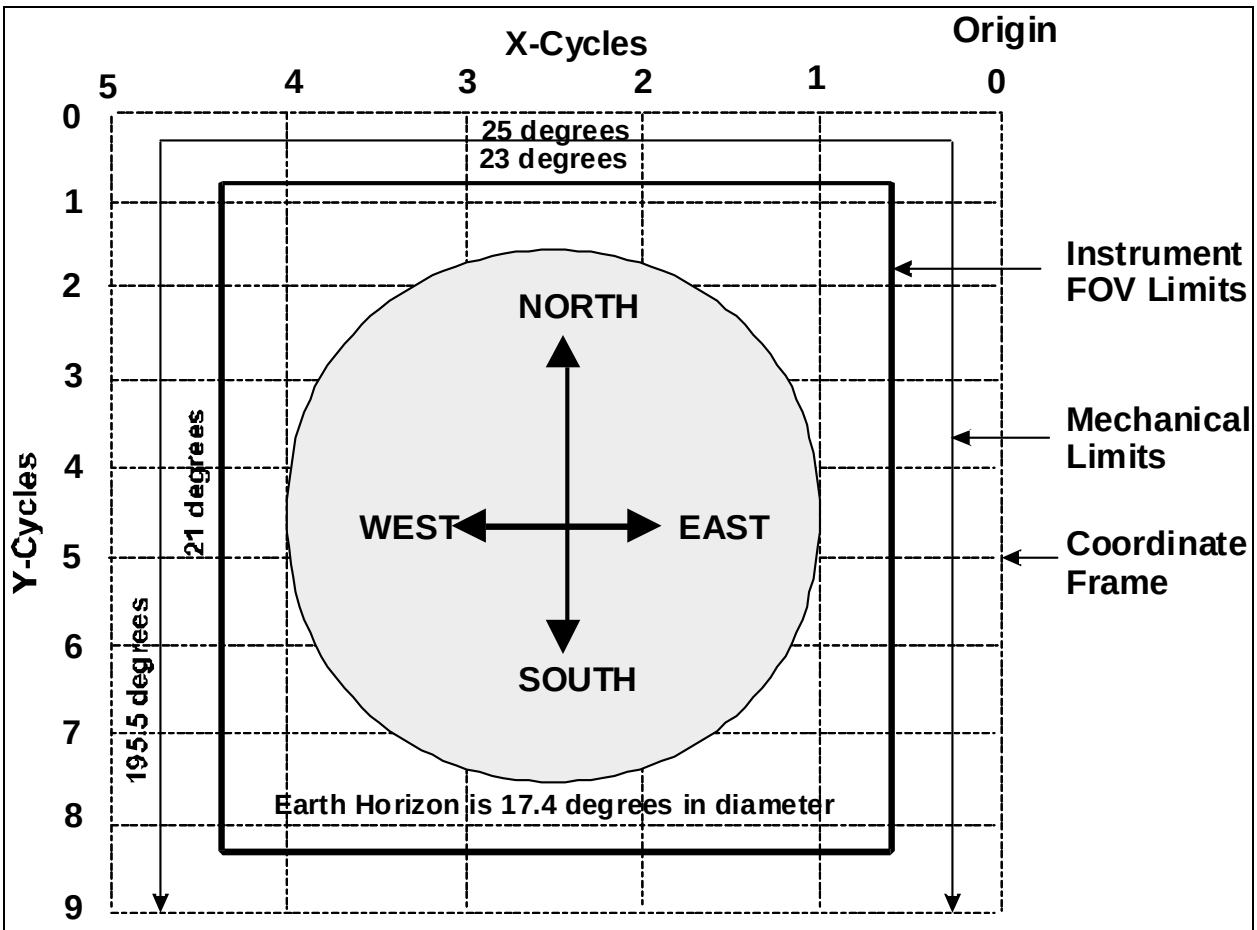

Sounder Instrument Nadir

Offset from Origin	E/W	N/S
Mechanical Degrees	7.03125	12.65625
Cycles/Increments	2/1402	4/1402

Sounder Increments/Cycle: 0 – 2804

Figure 3-25. Sounder Coordinate System (Yaw-Flipped)

3.5 Bits, Words, and Formats

3.5.1 Bit Transmission Order

Every GVAR block transmitted consists of a similar sequence of the following four basic components:

a. 10,032-bit synchronization code
b. 720-bit header section
c. *N*-bit information field
d. 16-bit information field CRC.

The number of bits in the information field varies according to the type of GVAR block involved. Figure 3-26 illustrates the rules governing the order in which the bits of a GVAR block are transmitted, focusing on the bit sequence associated with a GVAR Block 11 header. The first 10,032 bits transmitted correspond to the block synchronization code. These are followed sequentially by the 720-bit header section, the 64,320-bit information field; and, finally, the 16-bit information field CRC. As shown, the 720-bit header section contains three, sequential 240-bit segments, each an identical copy of the 240-bit block header (see Figure 3-14 and Table 3-5).

In general, the transmission of any GVAR block segment always starts with the first word of the segment. The transmission proceeds in a sequential fashion through all of the words in the segment. For any given word, the left-most or MSB is transmitted first. Transmission of the word proceeds in a sequential fashion through the remainder of the bits, with the right-most or LSB transmitted last.

3.5.2 Longitudinal Parity (XOR) Words

Every transmitted GVAR block is terminated by a 16-bit CRC code that detects the presence of bit errors in the associated information field at the GVAR receiver (see Section 3.3.3). An additional level of error detection capability is provided for some GVAR block types in the form of embedded longitudinal parity words. The embedded longitudinal parity word is assigned to a portion or segment of the block's information field. If the block CRC denotes that an error is present in the received information field, the longitudinal parity words can be used to isolate the error(s) to a particular segment.

A longitudinal parity word may be either 6-, 8-, or 10-bits in length. The word length employed is the same as the word length used for the rest of the information data field. The word is formed by the cumulative XOR of all of the data words in the segment. The resulting XOR word is assigned a one or a zero in each bit position such that each bit position across all words in the segment has an even number of ones and zeros. Two examples are provided below showing the XOR word for a 4-word and a 5-word segment. An 8-bit word length is used for the 4-word segment and 10 bits for the 5-word segment.

Data words	1:	0 0 0 0 1 0 1 0	1:	1 0 0 0 0 0 1 1 0 1
	2:	0 0 1 0 0 1 1 0	2:	1 1 0 0 0 0 0 0 1 0
	3:	0 0 0 0 1 1 1 1	3:	1 1 1 0 0 0 1 0 0 0
	4:	0 0 0 1 1 1 1 1	4:	1 1 1 1 0 0 1 1 0 0
			5:	1 1 1 1 1 0 1 1 1 0
XOR word:		0 0 1 1 1 1 0 0		1 0 1 0 1 0 0 1 0 1

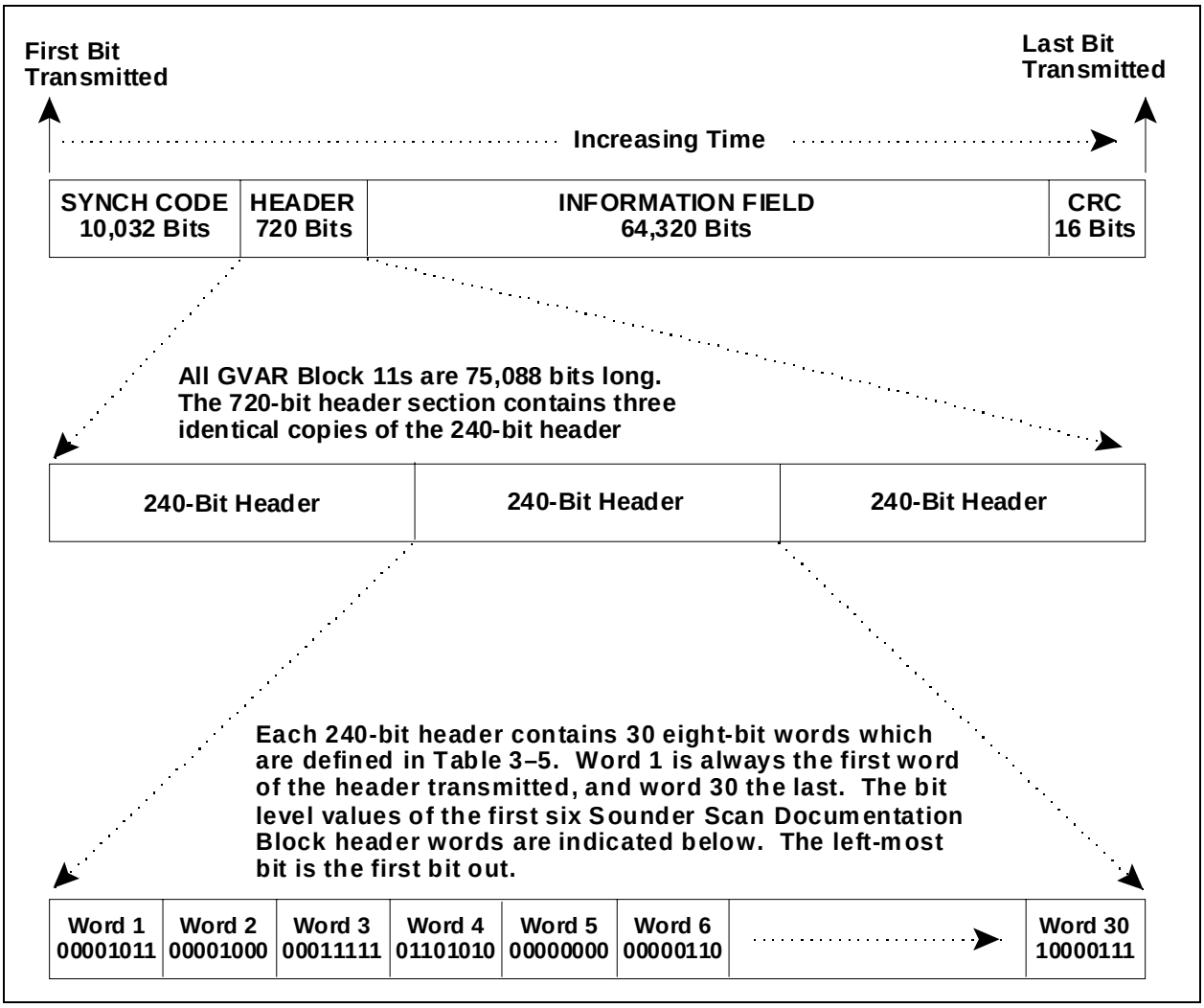

Figure 3-26. GVAR Block Bit Transmission Order

3.5.3 Integer Formats

All integer values transmitted in the GVAR format are right adjusted and zero filled within their allocated bit space. The size of the bit space for a particular integer value is generally a function of the word size used in the block information field and the expected range of the value. A total of seven different bit lengths are employed in the GVAR format for integer values. The following list denotes the range of values available for each bit length. It also provides a reference to an occurrence of their use in GVAR:

Length	Value Range	Where Used
6 bits	0 – 63	Table 3-10, word 9
8 bits	0 – 255	Table 3-12, word 261
8 bits	-128 – 127	Table 3-6, words 6235 – 6282
10 bits	0 – 1023	Table 3-9, word 3
16 bits	-32768 – 32767	Table 3-6, words 6311 – 6312
18 bits	0 – 262143	Table 3-10, words 6 – 8

Negative integer values in the GVAR format are formed using a twos complement notation and only permitted for the 8-, 16-, and 32-bit lengths. All other bit lengths always represent a zero or positive integer value. The only integer terms currently expected to indicate negative quantities include the co-registration correction terms for the Imager (see Table 3-6, words 1631 – 1678 and 6235 – 6282), the Imager grid bias terms (see Table 3-6, words 189 – 192) and the instrument detector offsets (Imager: see Table 3-7, words 6311 – 6398; and Sounder: see Table 3-12, words 3011 – 3074).

Two special cases exist for 16-bit integer values that do not employ two's complement arithmetic. The first case involves the GVAR block header block sequence counter (see Table 3-5, words 13 – 14). The second case involves the Sounder detector data arrays defined in Section 3.3.7.3.3. In both of these cases, the 16-bit integers take on values ranging from 0 – 65,535.

3.5.4 Floating Point Format

All floating point numbers used in GVAR are 32 bits in length and transported by way of four sequential 8-bit words. Each is a single precision floating point value formatted for the Gould or SEL computer. This format employs a sign bit, a 7-bit exponent, and a 24-bit fractional mantissa, defined as follows:

```
word     1                2                3                4
bits     1            8   1            8   1            8   1            8
         - - - - - - - -  - - - - - - - -  - - - - - - - -  - - - - - - - -
         S E E E E E E E  MMMMMMMM        MMMMMMMM        MMMMMMMM
                          M               M               M
                          MSB------------- 24-bit Mantissa -----------------LSB
```

WORD	BIT	DESCRIPTION
1	1	**S**ign bit – set to 1 if negative quantity, set to 0 if positive. Negative quantities employ a two's complement notation for the entire 32 bits.
1	2–8	**E**xponent – is biased at 64 (*x* '40') for a null shift of the binary point. The binary point is shifted 1 hexadecimal digit (4 bits) for each exponent increment, right for positive increments (>*x* '40'), left for negative increments (<*x* '40').
2	1–8	**M**antissa – first 8 bits. Bit 1 is the MSB of the 24-bit mantissa. The Binary point is positioned to the left of bit 1.
3	1–8	**M**antissa – second 8 bits.
4	1–8	**M**antissa – last 8 bits. Bit 8 is the LSB of the 24-bit mantissa.

The following examples illustrate the relationship between a decimal value and associated floating point format:

Decimal Value	Floating Point Format Hexadecimal Value
–1.0	x 'BEF00000'
–0.1640625	x 'BFD60000'
0.0	x '00000000'
0.1640625	x '402A0000'
1.0	x '41100000'
100.1640625	x '42642A00'

3.5.5 Sounder Raw Data Word Format

The GOES I-M Sounders generate one raw data block every 100 msec. These raw data blocks each contain 250 16-bit words of information for a total block length of 4000 bits. The word formats and their arrangement in the blocks is defined in reference document SJ-572022. The SPS performs a number of operations on the received raw Sounder data blocks, including the following:

a. Replacing the first 64 bits (synchronization code) with a time tag.

b. Reformatting each of the remaining 246 16-bit words into 492 8-bit words (two 8-bit words for each original 16-bit word).

c. Appending Earth location information.

The final result of these operations is the Sounder data record transmitted in the GVAR stream. This record is defined in Table 3-13 and consists of 544 8-bit words. The first 500 words of this record correspond to the original raw data block generated by the Sounder.

The reformatting of the original 16-bit words into two 8-bit words includes the following, two primary operations:

a. The SPS changes the 16th bit of the original word, which is an odd parity bit, to a bad parity indicator. The bit is set to one if the parity of the original word is bad and zero if the parity is good.

b. The bad parity indicator bit is then moved from the LSB position to the MSB position of the word. The 15 remaining data bits are shifted right, one position, to accommodate the move.

Following these two operations, the SPS views the resulting 16-bit word as two sequential 8-bit words viewed for GVAR transmission purposes. The transformation described above is diagramed as follows for the Mth word of the original raw Sounder data block:

Original 16-bit word M

MSB															**LSB**
d	d	d	d	d	d	d	d	d	d	d	d	d	d	d	O
0	0	0	0	0	0	0	0	0	1	1	1	1	1	1	D
1	2	3	4	5	6	7	8	9	0	1	2	3	4	5	D

SPS transformed 16-bit word M

MSB															**LSB**
B	d	d	d	d	d	d	d	d	d	d	d	d	d	d	d
A	0	0	0	0	0	0	0	0	0	1	1	1	1	1	1
D	1	2	3	4	5	6	7	8	9	0	1	2	3	4	5

SPS transmitted 8-bit words

	word (2*M – 1)								word (2*M)						
MSB							**LSB**	**MSB**							**LSB**
B	d	d	d	d	d	d	d	d	d	d	d	d	d	d	d
A	0	0	0	0	0	0	0	0	0	1	1	1	1	1	1
D	1	2	3	4	5	6	7	8	9	0	1	2	3	4	5

3.6 Visible and Infrared Channel Calibration

The OGE performs relativization, normalization, and calibration of the Imager and Sounder detector data as well as monitors calibration and telemetry data. The monitoring functions provide extensive statistics computation on spacelook data, blackbody calibration data, and selected telemetry points. Monitoring also includes verification of the linearity of the detector electronics based on electronic calibration (ECAL) data received at each blackbody calibration occurrence. The following sections describe the relativization, normalization, calibration, and linearity verification functions in detail.

3.6.1 Visible Channel Processing

No calibration is applied to either the Imager and Sounder visible channel data. Instead, the visible detector data are subjected to two processes, termed relativization and normalization, described below.

3.6.1.1 Relativization

The SPS relativization process adjusts the outputs of each visible channel detector to the *difference* between the detector's output signal for the target and the detector's space (black) reference signal, rather than the *absolute* detector signals. The resultant signal is relative to space. The Imager's primary objective is to eliminate image banding caused by noise in the space clamps. The Sounder does not execute space clamps, and its primary objective is to eliminate the effects of drifts.

Relativization is applied to the counts from each pixel in a two-step process. First, the mean count value from the most recent spacelook is subtracted from the pixel counts. The Imager's spacelook data is from the postclamp following the preceding spacelook. (See Section 3.3.7.7 for a discussion of spacelooks.) Second, the constant BOOST is added. Without the second step, relativization would have two unfortunate consequences. First, when space itself is the target, the distribution of the data would be approximately Gaussian with a mean of zero. Half of the distribution would have count values less than zero and would be lost, since GVAR does not transmit negative integers. Second, the overall brightness of the image would change significantly between the relativization 'off' and relativization 'on' states.

The value of BOOST is set at 29 for all eight visible channel detectors of all Imagers. It is set to 920 for all four visible channel detectors of all Sounders. Since these are the nominal values for space in the absence of relativization, little change in overall image brightness will occur between the relativization off and on states. However, note that the two steps in the relativization process do not cancel each other out, because the mean space value and BOOST are not necessarily equal. The mean spacelook value varies from event to event, affected by noise in the case of the Imager and noise and drift in the case of the Sounder. BOOST, on the other hand, is invariant.

The SPS applies the two relativization steps in sequence, followed by normalization, for the Sounder. The SPS applies relativization and normalization in one operation for the Imager. The on or off relativization status and the values of BOOST are transmitted in GVAR in the Block 0s (see Table 3-6 and Table 3-12).

3.6.1.2 Normalization

The SPS normalizes Imager and Sounder visible detector data to allow all the visible detectors of a single instrument to produce the same grey scale intensity when an area of uniform brightness on space or the Earth is viewed. The normalization operation, which occurs in real time in the SPS, consists of the application of NLUTs to the scan data. The NLUTs, whose dimensions are 8 (detectors) by 1024 (count intensity levels) for the Imager and 4 by 8192 for the Sounder, are

generated in non-real time and off-line in the PM. Typically, an instrument's NLUT will be generated soon after launch and then updated infrequently, if ever.

Normalization can be applied to relativized or non-relativized image data. However, if an NLUT is optimal for relativized data, it will, in general, not be optimal for non-relativized data and vice-versa.

The approach used to generate an NLUT in the PM is a histogram matching technique. Details can be found in:

> Weinreb, M.P., J.X. Johnson (nee R. Xie), J.H. Lienesch, and D.S Crosby, "Destriping GOES images by matching empirical distribution functions," *Remote Sens. Environ.*, 29, 185 (1989).

Normalization may be turned on and off via operator directive. When normalization is enabled, at the start of the next instrument scan, the NLUT will be used for the remainder of the current frame and for all subsequent frames until otherwise directed. The NLUTs in current use are sent to users in GVAR Block 11s after each blackbody calibration event (see Section 3.3.7.10).

ITT (factory) measured characteristic response coefficients for Imager and Sounder visible detectors are also provided in the Imager and Sounder Documentation blocks (GOES I-N) and/or Imager Factory Coefficients blocks (GOES-M and beyond). These coefficients are never actually applied to visible detector data by the OGE but are provided to the user for conversion of visible detector counts to radiance. Included in each instrument's documentation block is the conversion factor required to obtain the albedo from the visible radiance. Refer to Table 3-6 and Table 3-12 for a detailed Documentation Block description for the Imager and Sounder, respectively.

3.6.2 IR Calibration

Imager and Sounder IR-channel calibration and application of the calibration equation to the raw scan data is a real-time process in the SPS. The calibration is the process of determining the coefficients of the calibration equation, which relates the count output from the view of a pixel to the intensity of the radiation (radiance) incident on the instrument. Details of the calibration can be found in Weinreb, M.P., M. Jamieson, N. Fulton, Y. Chen, J.X. Johnson, C. Smith, J. Bremer, and J. Baucom, 1997: Operational Calibration of GOES-8 and -9 Imagers and Sounders, *Applied Optics,* 36, 6895-6904.

The calibration equation is a quadratic whose coefficients are generated from real-time, on-orbit observations of space and the instrument's onboard blackbody target, as well as the factory-measured instrument response characteristics, i.e.,

$$R = b + m\,C + q\,C^2 \qquad (3.6\text{-}1)$$

where R is radiance, C is the measured counts, b is the intercept (bias factor), m is the first-order gain (gain factor), and q is the coefficient of the quadratic (second-order) term. Nominal values of b, m, and q for each detector and detector-channel, computed from the spectral response function, are

provided to the user in the documentation blocks. See Table 3-6 (GOES I-N) or Table 3-38 (GOES-M and beyond) for the Imager and Table 3-12 for the Sounder. The approximation in Eq. 3.6-1 is valid over the limited range of blackbody temperatures expected in orbit, typically 270–310K.

The calibration coefficients are expected to vary in flight for several reasons, including aging of components and temperature variations within the instruments. In addition, the Imager IR detectors are subject to a low frequency random drift. This phenomena is labeled $1/f$ drift, and it has a pronounced affect upon the bias terms (b terms) of the medium and longwave IR detectors of the Imager. The Sounder avoids these effects by high frequency clamping of the IR detectors to the filter wheel every 100 msec.

The OGE calibration algorithms allow for recomputation of the calibration coefficients (b, m, and q) from the instrument's observations of its on-board blackbody and space, and measurements of the temperature of the blackbody from thermistors embedded within it. In addition, Imager IR bias terms are dynamically adjusted for each pixel to account for the effects of the $1/f$ drift.

Every time a space or blackbody look occurs, a new calibration coefficient set is generated. The Sounder automatically transmits a new set in GVAR within a Calibration Coefficient and Limits Block 11 (see Section 3.3.7.9). The Imager transmits new sets for each output scan in the Scan Documentation Block (see Section 3.3.4.5). In addition, a Calibration Coefficient and Limits Block 11 is transmitted following each blackbody calibration event and each 2-minute interval spacelook event (see Section 3.3.7.9). Each calibration coefficient set includes the latest coefficients for all Imager detectors or Sounder detector-channel combination, along with a time tag. The time tag can be used to correlate the calibration coefficient set to the sensor data.

Scaling factors are applied to a new calibration coefficient set before the set is actually enabled within the SPS. Hence, the IR scan line data (radiances) transmitted in GVAR is also scaled. The scaling factors are used to expand calibrated data into a range of 0 – 1023 for the Imager and 0 – 65,535 for the Sounder to maximize the dynamic range of the retransmitted data. The scaling factors used are provided to the user in the Imager and Sounder Scan Documentation Blocks. With these factors included, the form of the equation relating input raw counts to retransmitted scaled radiance becomes the following:

$$SR = SB + SG\,(b + m\,C + q\,C^2) \qquad (3.6\text{-}2)$$

where SR is the scaled radiance, SB is the scaling bias, and SG is the scaling gain. The calibration coefficient sets transmitted in GVAR (the b, m, and q terms) are always in their unscaled forms.

The following sections describe distinct operator-selectable IR calibration modes. The different modes allow enough flexibility so that observation and analysis of detector response as related to instrument telemetry can be used to select the most useful algorithms for the IR calibration process.

3.6.2.1 Standard IR Calibration

In the standard algorithm, the second-order terms (q) of the calibration equations are not expected to change significantly; therefore, the factory measured values are used. The first-order gain (m) and bias (b) terms are expected to vary as detectors age and temperatures change. Therefore, the coefficients of those terms are recomputed based on in-flight space and blackbody measurements.

Data associated with the instrument's blackbody are of two types: First, there are the direct measurements of its bulk temperature from thermistors embedded in the blackbody. Second, there are the radiometric observations of the blackbody made periodically by the sensor itself, during which the detectors' outputs are downlinked.

A key quantity in the calibration of any channel is the average radiance of the blackbody in the passband of that channel. It is calculated from the thermistor measurements (made on orbit) of the blackbody's temperature and the spectral response function of the channel (measured before launch). An exact calculation would be to compute Planck radiances from the blackbody's temperature and then average the Planck radiances over the spectral response function of the channel. In the actual processing, the SPS uses an approximation, a cubic polynomial,

$$R(T) = R0 + a\,T + b\,T^2 + c\,T^3 \qquad (3.6\text{-}3)$$

where $R(T)$ is the calculated channel-averaged radiance of the blackbody, T is the blackbody's temperature in K, and $R0$, a, b and c are the polynomial coefficients determined from the spectral response function of the channel. These coefficients are provided to the user in the Imager and Sounder documentation blocks. See Table 3-6 (GOES I-N) or Table 3-38 (GOES-M and beyond) for the Imager and Table 3-12 for the Sounder. This approximation holds only for the limited range of temperatures (270K - 310K) that the blackbody assumes in orbit.

Following the collection of blackbody calibration data in orbit, the determination of detector first-order gain and bias is carried out in several steps. First, a moving window's worth of the latest N (operator-adjustable) blackbody thermistor samples is quality-checked and averaged into one value for each thermistor. These individual thermistor values are converted to temperatures using factory measured polynomial coefficients relating measured thermistor output in counts to actual blackbody temperature. The polynomial is as follows:

$$(1/T) = A + B \ln X + C (\ln X)^3 \qquad (3.6\text{-}4)$$

where,

T	=	thermistor temperature in K
A, B, and C	=	thermistor characteristic terms
X	=	thermistor resistance computed as:

$$X = (D + E\,G)/(F + G) \qquad (3.6\text{-}5)$$

where,

D , E , F	=	amplifier characteristic terms
G	=	raw counts in base 10

The coefficients, A – F, above are provided in the Factory Parameters section of the Imager and Sounder documentation blocks. The temperature of the blackbody is calculated as the weighted mean of the all the thermistor values. (If, for any one thermistor, the number of samples that passed the quality-check filter is below a specified minimum and the affected thermistor's weighing factor is not zero, a critical alarm is reported and new IR calibration coefficients are not computed.)

A blackbody (target) radiance is then computed for each Imager detector or Sounder detector-channel combination from Eq. 3.6-3.

The next step utilizes the instrument's downlinked radiometric measurements of the blackbody. The SPS computes an average blackbody measurement in counts for each detector, or detector-channel combination, from the downlinked samples. For GOES-I-M, the Imagers take ~1000 samples when viewing the blackbody target. For GOES-N and beyond, the Imagers take >10,000 samples when viewing the blackbody. Which samples and the number of samples to use for the blackbody measurement are selectable by the operator. Because only 1000 samples can be downlinked in GVAR, the operator may also specify which samples will be contained in GVAR. The current values of the operator selectable parameters are transmitted in the Imager Blackbody Block 11 which is described in Table 3-28. For the Sounders, 40 samples are used for all spacecraft. The downlinked samples are first filtered using low and high-reasonableness limits to eliminate noise-induced outliers. Next, the filtered samples are averaged. If the number of samples passing the reasonableness limits is below a specified minimum for any detector, a critical alarm is reported and new IR calibration coefficients are not computed for that detector or detector-channel. First-order gain is then computed for each detector or detector-channel with the following equation:

$$m = \frac{R(T) - q\,(C_{bb}^2 - C_{sp}^2)}{(C_{bb} - C_{sp})} \qquad (3.6\text{-}6)$$

where m is the first-order gain, q is the factory-measured second-order coefficient, C_{sp} and C_{bb} are the counts from the instruments view of space and its internal blackbody, respectively.

The Sounder uses the space level counts that are the filtered mean values acquired from the spacelook immediately preceding the blackbody event. A spacelook is performed prior to each blackbody calibration sequence, and the data samples are filtered and averaged as was described for blackbody data.

The SPS uses interpolated spacelevel values for the Imager. The Imager performs a spacelook associated with a clamping operation prior to blackbody events and a spacelook following the blackbody events. The filtered mean values acquired from these two operations serve as the end points between which the SPS computes a time-interpolated space count level.

A new bias factor is computed for each detector (detector-channel for Sounder) using the new first-order gains and the associated space levels. The equation is as follows:

$$b = -(q\, C_{sp}^{2} + m\, C_{sp}) \tag{3.6-7}$$

where b is the new bias, q is the factory-measured second-order coefficient, m is the newly computed first-order gain, and C_{sp} is the space-count value used to compute the first-order gain coefficient m.

The new bias factors, new gain factors, and second-order coefficients used for all the Imager detectors or Sounder detector-channel combinations constitute a new calibration coefficient set. The calibration coefficient set is time-tagged and transmitted in GVAR Block 11s along with the following information (see Section 3.3.7.9):

a. Weighted mean blackbody temperature
b. Blackbody thermistor weighting factors
b. Blackbody thermistor sample window size (N)
c. Q (quality or reasonableness limits)
d. Sample size minimums
e. Critical alarms (if any).

Spacelooks are performed at a higher frequency than blackbody calibration sequences. The bias coefficients are adjusted after each spacelook, using the spacelook data and the latest computed first-order gain from the most recent blackbody calibration. The equation is the same as the equation used for the bias computation following calculation of a new gain (3.6-7). The Sounder's new bias factors are automatically transmitted in a Calibration Coefficients and Limits Block 11 sequence along with all the unchanged information from the previous blackbody calibration.

The Imager's Block 11 sequence is generated every 2 minutes. However, any new sets being applied to a scan are reported in the Scan Documentation Block 0 preceding each scan. The bias coefficient applied to a raw Imager IR pixel is dynamically adjusted to compensate for the $1/f$ drift effects mentioned earlier. The adjustment performed relies upon the assumed linearity of the $1/f$ drift over short time intervals. A bias value coefficient $b0$ is first computed from postclamp spacelook measurements using the following:

$$b0 = -(q\, C_{sp}^{2} + m\, C_{sp}) \tag{3.6-8}$$

where q is the factory-measured second-order coefficient, m is the most recently computed first-order gain, and C_{sp} is the filtered mean postclamp spacelook count value. The computation results and the data from the scans that occur before the next spacelook event are held by the SPS. The preclamp spacelook data acquired from this next event are used to form the drifted spacelook filtered mean count level ($\mathrm{d}C_{sp}$). (See Section 3.3.7.7 for a discussion of spacelooks.) The following equation uses the $\mathrm{d}C_{sp}$ to compute the drift bias (bd) value:

$$bd = -(q\, \mathrm{d}C_{sp}^{2} + m\, \mathrm{d}C_{sp}) \tag{3.6-9}$$

The following equation uses the bias values, drift bias values, and the midpoint times of the two data sets to compute a bias rate (bias change per pixel) for each IR detector:

$$ibrate = \frac{(bd - b0)}{(td - t0)} * \frac{1}{prate} \tag{3.6-10}$$

In this equation, td and t0 are the midpoint times of the two spacelooks, and *prate* is a conversion coefficient nominally fixed at 5460 IR pixels per second. It is used to convert the bias rate from change per second to change per pixel.

If any intervening scans are being held by the SPS, the bias coefficients associated with the westernmost pixel in each scan, *bw*, are computed by linear interpolation between the postclamp bias values, *b0*, and the preclamp drift bias values, *bd*. The times, *tw,* of the westernmost pixels of each scan are used to establish the interpolation ratios, as follows:

$$bw = b0 + (bd - b0) * \frac{(tw - t0)}{(td - t0)} \tag{3.6-11}$$

Using *bw* and *ibrate*, the bias coefficient *bn* for the nth IR pixel of a scan is computed from the following:

$$bn = bw + (n - 1)\ ibrate \cdot dir \tag{3.6-12}$$

where *dir* is +1 for a W-E scan and –1 for an E-W scan. The calibration coefficients provided in the Imager Scan Documentation Block 0 include *bw*, *m*, *q*, and *ibrate* · *dir* for each IR detector. Also included in Block 0, are *t0*, *td*, *tw*, and the statistics associated with the postclamp and drift bias data sets.

Statistics are computed on detector spacelook data and transmitted with the raw data in GVAR Spacelook Block 11s as described in Section 3.3.7.7. Similarly, statistics are computed on detector blackbody calibration data and transmitted with the raw blackbody data in GVAR blackbody calibration Block 11s (see Section 3.3.7.8). Telemetry Statistics Block 11s are generated following each reported spacelook event (see Section 3.3.7.5).

3.6.2.2 Modifications to Correct for East-West Variation in Scan Mirror Reflectance

The standard IR calibration equations include a modification to account for the East-West scan-position variation in the reflectance of the Imager and Sounder scan mirrors. (See Weinreb, M.P., M. Jamieson, N. Fulton, Y. Chen, J.X. Johnson, C. Smith, J. Bremer, and J. Baucom, 1997: *Operational Calibration of GOES-8 and -9 Imagers and Sounders, Applied Optics,* 36, 6895-6904.) The standard calibration, referred to as mode 1, always includes this modification.

The modified equations use the scan mirror temperature and emissivity as a function of instrument address in units of inductosyn (instrument) increment number. After each blackbody event, a table of emissivity ε versus increment number θ is generated for each detector from a polynomial, as follows:

$$\varepsilon(\theta) = a + b\theta + c\theta^2 \tag{3.6-13}$$

The coefficients a, b, and c are generated off line by NOAA engineers shortly after launch and are updated infrequently, if ever. Their values are transmitted in GVAR in the Imager and Sounder Calibration and Limits Block 11s (see Table 3-30 and Table 3-31).

Removed (3.6-14)
Removed (3.6-15)

The basic calibration equation, 3.6-1, is modified to become the following:

$$R = \frac{\left\{ q\,C^2 + mC + b - \left(\varepsilon[\theta] - \varepsilon[sp]\right) R_M \right\}}{\left(1 - \varepsilon[\theta]\right)} \tag{3.6-16}$$

where R is radiance, b is a bias coefficient (from eq. 3.6-7), m is the first-order gain (gain coefficient), q is the quadratic (second-order) coefficient, and C is the measured counts, as in equation 3.6-1. The variable $\varepsilon(\theta)$ is the emissivity at the address of the target; $\varepsilon(sp)$ is the emissivity at the address of the spacelook; and R_M is the radiance of the scan mirror, which is calculated from its temperature by equation 3.6-3.

Corresponding changes are made in the scaling equation 3.6-2. However, the user still derives radiances from GVAR counts exactly as before, by subtracting the scaling bias and dividing by the scaling gain.

Equation 3.6-6, the computation of gain, is replaced with the following:

$$m = \frac{\left[r_{bb} - q(c_{bb}^2 - c_{sp}^2)\right]}{c_{bb} - c_{sp}} \tag{3.6-17}$$

where the subscripts bb and sp refer to blackbody and spacelook data, respectively. The quantity r_{bb} is given by the following:

$$r_{bb} = \left(1 - \varepsilon[bb]\right) R(T) + \left(\varepsilon[bb] - \varepsilon[sp]\right) R_{M,bb} \tag{3.6-18}$$

where $R(T)$ is the radiance of the blackbody and is computed from its temperature as described in Sections 3.6.2.1 and 3.6.2.2. The quantity $R_{M,bb}$ is the radiance of the scan mirror computed with equation 3.6-3 from a window-average temperature at the time of the blackbody event. The window-average temperature of the scan mirror is computed in the same exact way as that of the blackbody's, as described in Section 3.6.2.1. The value of this temperature is transmitted in GVAR in the Imager

and Sounder Calibration and Limits Block 11s (see Table 3-30 and Table 3-31). The quantities *ε[bb]* and *ε[sp]* are the scan mirror's emissivity at the blackbody and spacelook addresses, respectively.

Equation 3.6-7 remains unchanged, although it is understood that *m* is now computed as in Eq. 3.6-17.

With *m* and *b* computed as described above, the calibration is applied to the counts at each pixel address according to equation 3.6-16. In this equation, R_M is computed by equation 3.6-3 from the most recent 2-minute average temperature of the scan mirror. As before, the Imager drift correction time interpolates *b* between the spacelooks preceding and following the pixel. The value of *b*, for the Sounder, is the value computed at the spacelook preceding the pixel.

3.6.2.3 IR Calibration Extensions

There are sixteen extensions to the standard IR calibration algorithms. These extensions can be selected separately or in combination. The currently active calibration algorithms for the Imager are reported in the Calibration and Limits Block 11s in Table 3-30, words 417–419. The Sounder's active calibration algorithms are listed in Table 3-31, words 2097-2099. These words denote the currently active calibration mode for the computation of the three calibration coefficients b, *m*, and *q*. Each of these words is set to one in the standard algorithms defined in the preceding section. The following sections provide a description of each extended calibration mode.

3.6.2.3.1 IR Calibration – Bias Mode 2 (B-MODE = 2) (Sounder Only)

For GOES Sounders, in the basic bias mode 1, biases are computed once every two minutes from spacelook data, as is described in Sections 3.6.1.2 and 3.6.2.2. However, when on-board temperatures are changing rapidly, the biases change rapidly, and recalculating them every two minutes is insufficient to maintain the accuracy of the biases more than a few seconds after each spacelook. In addition, there is a substantial "banding," or intensity change, evident in frames at each two-minute boundary because of the large change made in the computed bias at those times. To avoid these problems, bias mode 2 was made available. In bias mode 2, the biases are updated every 1.1 sec by interpolation between the biases computed at successive spacelooks, as follows:

$$\mathbf{b(t+\Delta t) = b(t) + \Delta t * \{[b(t+Dt) - b(t)]/Dt\}} \qquad (3.6\text{-}19)$$

$$\mathbf{\Delta t = 1.1, 2.2, 3.3, \ldots (seconds)} \qquad (3.6\text{-}20)$$

Where **Dt** is the time span (nominally two minutes) between two spacelook events, the bias values, **b(t)** and **b(t+Dt)**, are computed by the standard method (Eq. 3.6-7), and **b(t+Δt)** is the bias value at any of the intervening times.

In the real-time GOES operation, the bias values for time lines between **t** and **t + Dt** cannot be computed until after the calibration event at **t + Dt** has occurred. As a result, all the raw sounder

observations between times **t** and **t + Dt** are buffered in the SPS system. Consequently, the calibrated sounder data (radiances) sent in GVAR for observations occurring between times **t** and **t + Dt** have to wait until after **t + Dt,** meaning that there will be a delay as long as two minutes or more from the time a pixel is observed until its radiance value is transmitted in GVAR. Once the calibration event at **t + Dt** has occurred, the buffered scan data between each pair of spacelooks are converted to radiances with the interpolated biases and the gain from the preceding blackbody event.

In addition, bias mode 2 makes a slight change in how the slopes are used in the bias calculation for spacelooks associated with blackbody events. Each blackbody event consists of a spacelook followed approximately 28 seconds later by a blackbody view. Each blackbody event is preceded by a spacelook two minutes earlier and is followed by a spacelook two minutes later. Below is a time sequence showing a blackbody event and spacelook events before and after. Spacelook $\mathbf{SP^{n+1}}$ and the blackbody view together are considered a blackbody event. Usually spacelooks, including the one that is part of a blackbody event, occur every two minutes.

The diagram in Figure 3-27 describes a typical routine.

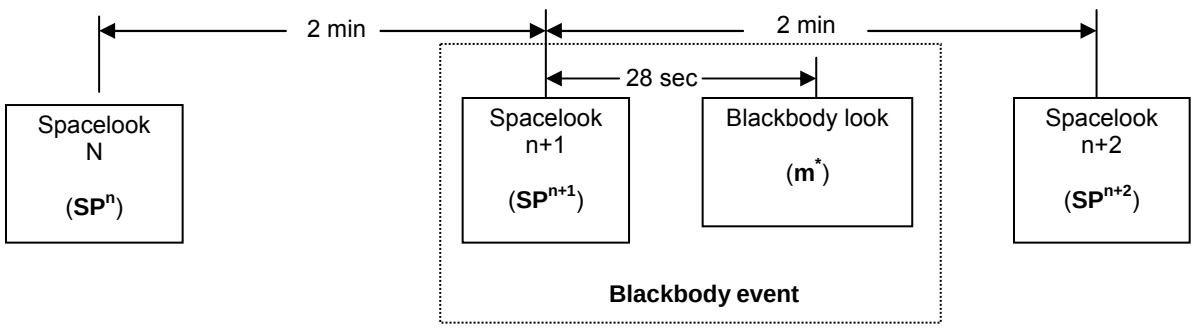

Figure 3-27. Timing of Sounder Spacelooks and Blackbody Look

Under the basic bias mode 1, the biases, including that associated with the blackbody event, are computed from Eq. (3.6-7) with data from the spacelooks and the gain (**m**) from the *preceding* blackbody event.

Under bias mode 2 , the biases at spacelooks are still computed from the gain (**m**) associated with the previous blackbody event *except for the bias at spacelook* $\boldsymbol{SP^{n+1}}$, which is part of the blackbody event. The bias at spacelook $\mathbf{SP^{n+1}}$ is computed with the forthcoming gain (**m***).

The Sounder Bias Mode 2 algorithm will be improved further in the next SPS software release, as the preceding version (and bias mode 1) appears to be subject to image striping near some blackbody events. The new algorithm is different from the current operational only for the data processing in the two-minute interval beginning at $\mathbf{SP^n}$ and terminating at the blackbody event or $\mathbf{SP^{n+1}}$ (no scan data between spacelook $\mathbf{SP^{n+1}}$ and blackbody view). The new algorithm not only interpolates bias values between $\mathbf{SP^n}$ and $\mathbf{SP^{n+1}}$, it also interpolates the gain values (between **m** and **m***). The gain interpolation is only performed between $\mathbf{SP^n}$ and $\mathbf{SP^{n+1}}$.

3.6.2.3.2 First-Order Gain Extensions (M-MODEs 2 - 14)

It is believed that various factors, such as the temperatures of the optics components, INR Sun shield, and diurnally varying 1/*f* noise, may affect the first-order gain for both the Imager and Sounder. To minimize the influence of these factors, fourteen different algorithms (M-modes) are available for the computation of the first-order gain coefficient.

All of these modes begin with the basic calculation of first-order gain coefficients after every blackbody calibration event, based on the latest spacelook and blackbody measurements. This standard computation is described below as first-order gain calibration M-mode 1.

M-mode 8 is the midnight blackbody calibration correction (MBCC), and is used as secondary standard mode. M-modes 2-7 are derived from M-mode 1, and equivalently, M-modes 9-14 are derived from M-mode 8. However, M-mode 12 is equal to M-mode 11 due to a limitation on data storage. Figure 3-28 shows the configuration of all the modes, and the following is a description of them:

a. Mode 1 — Standard algorithm (described in Sections 3.6.2.1 and 3.6.2.2)
b. Mode 8 — Secondary standard algorithm (Midnight Blackbody Calibration Correction)
c. Modes 2 and 9 — Gain as a function of patch temperature
d. Modes 3 and 10 — Diurnally averaged gain
e. Modes 4, 11, and 12 — Gain as a function of optics temperatures
f. Modes 5 — Diurnally average gain, updated as a function of optics temperatures
g. Modes 6 and 13 — Gain as a function of time (linear)
h. Modes 7 and 14 — Gain as a function of time (quadratic).

Once a new first-order gain has been computed according to the selected mode, the same spacelook means and quadratic coefficients (from the previous spacelook calculations) are used, along with the new gain coefficients, to recompute the bias coefficients; the equation is the same as that used to compute the bias coefficients after a spacelook (described in Sections 3.6.2.1 and 3.6.2.2). The new gain and bias coefficients, along with the quadratic coefficients, are transmitted in the GVAR data stream and are applied to all subsequent image data.

3.6.2.3.2.1 Mode 8 - Midnight Blackbody Calibration Correction (MBCC) - Imager Only

During part of the year, the computed calibration first-order gains from M-mode 1 exhibit anomalous dips in the approximately eight hours centered on satellite midnight. It is believed that most of the anomaly is the result of radiation from hot INR Sun shield being reflected by the imager's internal blackbody to its detectors during the blackbody event. Studies show that the effective temperature of the Sun shield in the imager's scan cavity sometimes gets as high 350K, making it a very strong source of infrared radiation. Also, it is believed that some error may be introduced by scattered solar radiation, which contaminates the instrument spacelook signal around midnight during the two annual eclipse seasons. Both midnight effects alter the first-order gain by as much as 4%, thus leading to an apparent temperature error of up to 1 K for a 300K target.

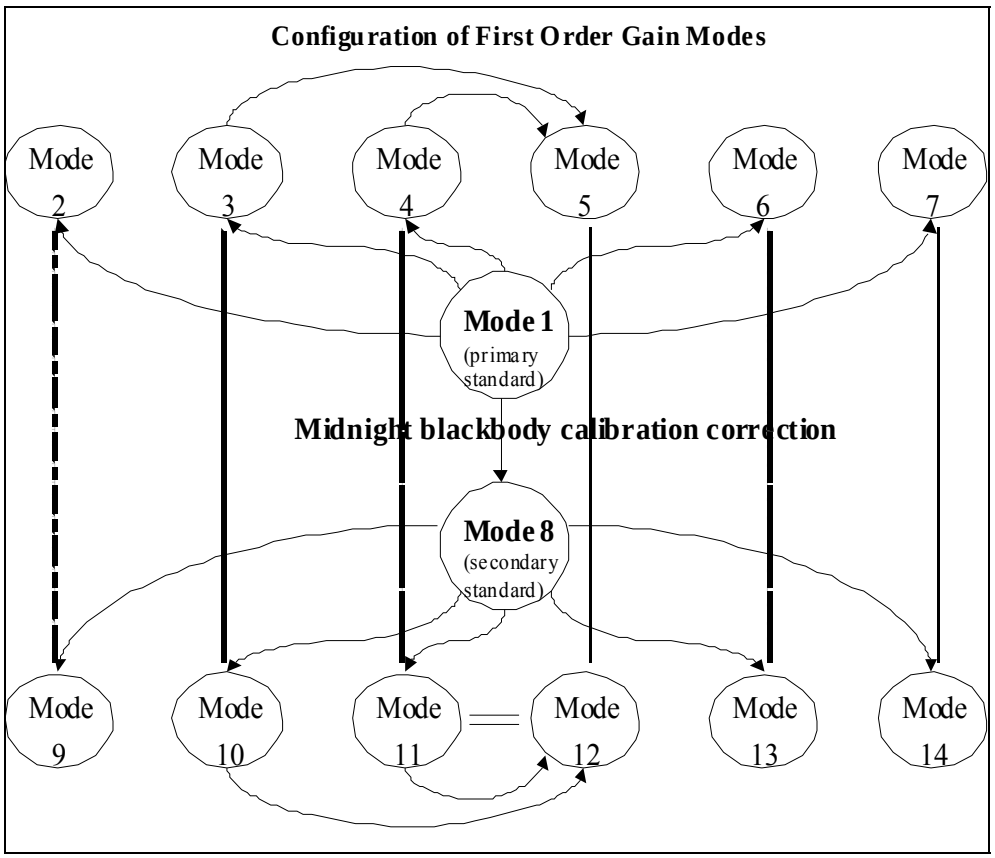

Figure 3-28. Configuration of All Modes

The midnight blackbody calibration correction (MBCC) is applied to the IR channels of the imager to correct for this error. MBCC can be switched on or off by operator directive, and is applied in addition to any other calibration enhancements.

MBCC can be expressed in the following steps:

a. The current responsivity, r, is computed for each detector during every blackbody event. (A channel/detector's responsivity is its output-count increment for a unit change in radiance.) The responsivity is a simple function of the first-order gain, m, i.e.,

$$r = (m + 2qC_b)^{-1} \tag{3.6-21}$$

where q is the second-order coefficient, m is computed by M-mode 1, C_b is the mean raw count value registered by the IR detector while viewing the blackbody.

b. Historical responsivities and optics temperatures, T, are extracted for the previous D days outside of the midnight window. The duration of the midnight window (in hours) and the value of D are operator selectable integers, and T is one of 26 operator-selectable optics temperatures.

c. An estimated responsivity r_{est} is calculated by performing a quadratic regression on T, the chosen optics temperature. This regression is restricted to data from blackbody events outside of the midnight window. The optics temperature and the first-order gains (which are used to compute the responsivities at each blackbody event) in the regression are quality controlled. The temperature is discarded if it exceeds an operator-specified critical limit. Before doing the regression, the SPS computes the mean first-order gain μ, and standard deviation, σ, of all the first-order gains in the dependent sample. All first-order gains whose values are not between $\mu - M\sigma$ and $\mu + M\sigma$ are rejected from the dependent samples, where M is an operator-specified integer. The Standard Errors of Estimate (SEE) of the responsivity generated from the regression are used for quality control of the responsivities as described below.

d. The current responsivity, r, and the estimated responsivity, r_{est}, at each blackbody event are compared for each channel/detector. If the absolute value of their difference is less than or equal to $N*SEE$, where SEE was computed from previous step and N is an operator-selected integer, then the current first-order gain is used in further processing. But if the absolute value of this difference is greater than $N*SEE$, then the first-order gain associated with the estimated responsivity (m_{est}) is computed,

$$m_{est} = 1/r_{est} - 2qC_b \tag{3.6-22}$$

and is used in all further processing.

3.6.2.3.2.2 M-Modes 2 and 9 - Gain as a Function of Patch Temperature

The M-mode 2 algorithm addresses the effects of narrow range IR patch temperature on the first-order gain of the calibration equation. In this mode, a linear function of gain versus patch temperature is computed based on data from two blackbody calibration events. The slope of the linear function is used to adjust the value of the first-order gain at 2-minute intervals, as a function of change in patch temperature, until the next blackbody calibration event. The specific steps used to accomplish these tasks are as follows.

After every blackbody calibration event:

a. Current mean patch temperature is computed as part of the 2-minute telemetry statistics calculations preceding this blackbody event.

b. First-order gain coefficients are computed based on the latest spacelook and blackbody measurements (as described in Sections 3.6.2.1 and 3.6.2.2).

c. The just-computed patch temperature and gain values are saved for use at this blackbody calibration event and at the next one.

d. The linear relationship of gain versus patch temperature is computed using the equation

$$S = (M_p - M_c)/T_p - T_c) \quad (3.6\text{-}23)$$

where S is the slope of the linear function, *M* is the first-order gain, *T* is the mean patch temperature, and subscripts p and c indicate the previous and current blackbody events, respectively.

At each 2-minute interval (or multiple thereof) after the blackbody event, the mean patch temperature (T) is again computed. The first-order gain coefficient (M) is recomputed as follows:

$$M = M_c + S*(T - T_c) \quad (3.6\text{-}24)$$

where S, M_{bb}, and T_{bb} are the slope, first-order gain, and patch temperature, respectively, computed at the most recent blackbody calibration event.

Four operator-modifiable parameters are used for each instrument in this calibration:

a. The number of 2-minute intervals between first-order gain recomputations. If the number is set to 1, first-order gains are recomputed every time 2-minute calculations are performed. If set to greater than 1, the specified number of 2-minute intervals must pass before first-order gains are recomputed.

b. The minimum time, in minutes, between blackbody calibration events. If two blackbody calibration events occur in less than the minimum specified interval, only the data from the second of the two events will be used (along with data from the blackbody event preceding these two events) to compute the slope of the linear function relating gain to patch temperature.

c. The maximum acceptable value for the computed slope for each IR detector. If this value is exceeded, an alarm is generated in the event log and in GVAR, and the slope is forced to zero, thus disabling first-order gain recomputation until the next blackbody calibration event.

d. The minimum acceptable value for the computed slope for each IR detector. If the slope falls below this value, an alarm is generated in the event log and in GVAR, and the slope is forced to zero, disabling first-order gain recomputation until the next blackbody calibration event.

3.6.2.3.2.3 M-Modes 3 and 10 - Diurnally Averaged Gain

The M-mode 3 algorithm is designed to minimize any variation in the first-order gain caused by measurement noise. Using historical data, a filtered weighted average is computed of all the gains for a selected time interval over a selected number of days.

After every blackbody calibration event, the following specific steps are used to accomplish these tasks:

a. First-order gain coefficients are computed from the latest spacelook and blackbody measurements as described in Sections 3.6.2.1 and 3.6.2.2. These gains, along with the associated blackbody event time, are saved to a history file.

b. Data belonging to a specified interval, *H* hours, centered at the current blackbody event time T_0, for the previous *D* days, is extracted from the history file. *H* and *D* are operator specified.

c. A weight is computed for each extracted data point with the following equation:

$$w_i = ln(C_1 + C_2*D_i) * ln(C_3 + C_4*[T_i - T_0]) \quad (3.6\text{-}25)$$

where w_i, D_i, and T_i denote the weight, day, and time of the ith data point; and $C_{1\text{-}4}$ are specified in an operator-modifiable array. Nominal values are: $C_1 = e$, $C_2 = -0.1$, $C_3 = e$, $C_4 = -0.5$. (The notation "ln" represents the natural logarithm. The constant "e," the base of the natural logarithm, is approximately 2.71828.)

d. For each detector, the weighted average (*M*) first-order gain and standard error (*S*) of extracted data (x_i) is computed:

$$M = \sum_{i=1}^{N} (w_i * x_i) \Big/ \sum_{i=1}^{N} (w_i) \quad (3.6\text{-}26)$$

$$S^2 = \frac{N}{N-1}\left\{\sum_{i=1}^{N}\left(w_i * x_i^2\right) - M^2 * \sum_{i=1}^{N}(w_i)\right\} \quad (3.6\text{-}27)$$

e. The standard error (S) is used to remove outliers from the extracted history data. A data point (x_i) is considered an outlier if:

$$|x_i - M| > K*S/sqrt(w_i) \quad (3.6\text{-}28)$$

where *K* is an operator-specified integer. In the SPS database, K is represented by the constants IMNSIGMA for Imager and SMSIGMA for Sounder. It is expected to take a value between 1.0 and 5.0.

f. The last two steps (*M, S* computation and removal of outliers) are repeated until no more outliers can be detected, or the percentage of outliers exceeds a level specified by the operator, or finally if the maximum number of iterations is exceeded, as specified by the operator.

The final value obtained for M is the diurnally averaged gain, and it is used for subsequent IR data calibration until the next blackbody calibration sequence. In M-mode 3, no recomputation of the first-order gain occurs between blackbody calibration events.

3.6.2.3.2.4 M-Modes 4, 11 and 12 - Gain as a Function of Optics Temperatures

The M-mode 4 algorithm addresses the effects of the temperature of various optics components on the first-order gain. Once a day, a multilinear regression analysis is performed on the data in a history file to determine the relationship of gain to optics temperatures. The coefficients of the regression are subsequently used to update the first-order gain between blackbody events based on changes in the optics temperatures. The specific steps used to accomplish these tasks are described here.

After every blackbody calibration event, temperatures and gain coefficients are computed:

a. Current mean optics temperatures are computed as part of the 2-minute telemetry statistics calculations preceding this blackbody event.

b. First-order gain coefficients are computed based on the latest spacelook and blackbody measurements (as described in Sections 3.6.2.1 and 3.6.2.2). These gains, along with the associated blackbody event time and temperatures of the optics components, are saved in the history file.

At an operator-specified interval (nominally once each day), a multilinear regression analysis is performed:

a. The first-order gains and temperature of selected optics elements for the previous *D* days is extracted from the gain history file. *D* and optics elements are operator-specified.

b. A multilinear regression analysis of gains versus optics temperatures is performed for each detector:

$$M = B_0 + B_1T_1 + B_2T_2 + ... + B_nT_n \tag{3.6-29}$$

where M is the gain of the detector, n is the number of selected optics elements, T_K is the temperature of the Kth optics element ($K=1,...,n$), and $B_0, B_1, B_2,...,B_n$ are the coefficients of regression.

c. The coefficients of regression, their standard estimate of error (*SEE*), and the optics selector array are also saved in the history file. If the *SEE* exceeds operator-specified limits, an alarm is generated in the event log and in GVAR. Also, the coefficients of regression are discarded and previously computed coefficients of regression remain in use.

d. At each 2-minute interval (or multiple thereof) after the blackbody event, the mean temperatures T_K of the optics components are again computed. The first-order gain coefficient (M) is recomputed as follows:

$$M = M_{BB} + \sum_{K=1}^{n} \left\{ B_K * \left(T_K - T_{K_{BB}} \right) \right\} \tag{3.6-30}$$

where M_{BB} and $T_{K_{BB}}$ are the first-order gain and the temperature of the Kth optics element, computed at the preceding blackbody calibration event; and B_K is the coefficient of regression for the Kth optics element.

e. Operator-specified parameters define the number of 2-minute intervals between first-order gain recomputations. If set to 1, first-order gains are recomputed every time 2-minute calculations are performed (these 2-minute calculations are discussed in Section 3.6.2). If set to greater than 1, the specified number of 2-minute intervals must pass before first-order gains are recomputed.

3.6.2.3.2.5 M-Mode 5 - Diurnally Averaged Gain as a Function of Optics Temperatures

M-mode 5 is a combination of M-mode 3 and M-mode 4. The diurnally averaged gain is computed as described for Mode 3, and updated between blackbody events based on changes in the optics temperatures as in Mode 4. Note that Mode 12 is identical to Mode 11 due to data storage limitations.

3.6.2.3.2.6 M-Modes 6 and 13 - Gain as a Function of Time (Linear)

The M-mode 6 algorithm is designed to compute gain solely as a function of time. A weighted, least-squares fit is performed on the data in the history file to determine the linear relationship of gain to time. The coefficients of the fit are subsequently used to recompute the first-order gain coefficient between blackbody events as a function of time. The specific steps used to accomplish these tasks are given below.

After every blackbody calibration event, the following functions are performed:

a. First-order gain coefficients are computed based on the latest spacelook and blackbody measurements (as described in Sections 3.6.2.1 and 3.6.2.2). These gains, along with the associated blackbody event time, are saved in a history file.

b. Data belonging to a specified interval *(H)* centered at the current blackbody event time T_0, for the previous *D* days, are extracted from the gain history file. *H* and *D* are operator-specified parameters.

c. A weight is computed for each extracted data point by using the following equation:

$$w_i = ln(C_1 + C_2*D_i) * ln(C_3 + C_4*[T_i - T_0]) \quad (3.6\text{-}31)$$

where w_i, D_i, and T_i denote the weight, day, and time of the ith data point; and $C_{1\text{-}4}$ are specified in an operator-modifiable array. Nominal values are: $C_1 = e$, $C_2 = -0.1$, $C_3 = e$, $C_4 = -0.5$. (The notation "ln" represents the natural logarithm. The constant "e," the base of the natural logarithm, is approximately 2.71828.)

d. A polynomial regression analysis of gains versus time of day is performed for each detector:

$$M = a_0 + a_i\, t \quad (3.6\text{-}32)$$

where M is the first-order gain, t is the Time of Day (TOD), and a_i are the coefficients of regression.

1. The RSS is computed and compared to operator-specified limits. If the RSS values exceed operator-specified limits, an alarm is generated in the event log and in GVAR. Also, the coefficients of regression are discarded, and previously computed coefficients of regression remain in use.
2. As a last step, the coefficients of regression are used to estimate the smoothed gain at the time of the blackbody event.

e. At each 2-minute interval (or multiple thereof) after the blackbody event, the coefficients of regression are used to predict the first-order gains:

$$M = a_0 + a_i\,(t - t_0) \quad (3.6\text{-}33)$$

where M is the predicted gain, t is the current time, and t_0 is the time at the preceding blackbody event.

The operator specifies the number of 2-minute intervals between first-order gain recomputations. If set to 1, first-order gains are recomputed every time 2-minute calculations are performed (these 2-minute calculations are discussed in Section 3.6.2). If set to greater than 1, the specified number of 2-minute intervals must pass before first-order gains are recomputed.

3.6.2.3.2.7 M-Modes 7 and 14 - Gain as a Function of Time (Quadratic)

Mode 7 is the same as Mode 6, but uses a quadratic fit instead of linear as follows:

$$M = a_0 + a_1\, t + a_2\, t^2 \quad (3.6\text{-}34)$$

All other aspects, including the database parameters and displays related to Mode 6 or 7 calibration, are identical to Mode 6.

3.6.2.3.3 Second-Order Gain Extensions

The second-order gain extensions are described in the following sections.

3.6.2.3.3.1 Second-Order Gain Versus Patch Temperature (Q-MODE = 2)

Q-mode 2 is available for both the Imager and Sounder and computes the IR second-order gain coefficients at 2-minute intervals as a function of patch temperature. The second-order gain coefficients are factory measurements taken for each IR detector at the three distinct patch temperatures available to each instrument (termed patch low, patch mid, and patch high). Tables of these coefficients and their associated narrow patch temperature ranges are available to the SPS. When Q-mode 2 is enabled, the SPS compares the current smoothed (averaged over 2 seconds) patch temperature to the three nominal narrow temperature ranges defined for the instrument. If a match is detected, the second-order gain coefficients are taken directly from the gain table. If the current patch temperature lies outside of the nominal ranges, the SPS performs a linear interpolation, or extrapolation, of a new second-order gain on the tabulated factory coefficients. The option selected by the SPS is denoted by the patch temperature control level reported in Table 3-30, word 416, or Table 3-31, word 2096, of the Calibration and Limits Block 11s.

3.6.2.3.3.2 Second-Order Gain Versus Baseplate Temp (Q-MODE = 3)

Q-mode 3, available for both the Imager and Sounder, uses the baseplate temperature to compute the IR second-order gain coefficients at 2-minute intervals. A LUT containing values of the second order gain (*q)* at different baseplate temperatures is defined for each IR detector. A separate table is provided for each of the three nominal patch temperatures defined for the instrument (patch low, patch mid, and patch high). The table values are derived from factory measurements and provided in the Imager and Sounder documentation blocks. An effective baseplate temperature is calculated at 2-minute intervals from telemetry as the weighted mean of the six baseplate thermistor temperatures. The current value of q is determined from the effective baseplate temperature by interpolation in the LUT. The current smoothed patch temperature determines which of the three available LUTs is used for this interpolation. If the current patch temperature lies outside the defined table ranges, the two nearest tables are accessed with the effective baseplate temperature to generate two intermediate values of q. An interpolation, or extrapolation, is then performed using these two values, the associated patch temperature ranges, and the current patch temperature value to generate the new value of q.

Regardless of the calibration mode, the current weighted mean baseplate temperature, smoothed patch temperature, and the thermistor weighting factors are reported in the Calibration and Limits Block 11s along with the new values of the second-order gains. A critical alarm is generated, and reported in the Block 11, if the effective baseplate temperature is out of the LUT's range. If the baseplate temperature is out of range, the values of q are extracted directly from the LUT by selection of the nearest entry corresponding to the effective baseplate temperature.

3.6.3 ECAL Linearity Verification

Each blackbody calibration sequence on the Imager and Sounder is prefaced by an ECAL to measure the performance of the signal processing circuitry associated with each detector. The resulting 16 steps of measured output counts are received at the SPS and analyzed as described in the following paragraph.

First, all ECAL data are passed through high and low-reasonableness filters. The filtered data are then averaged into one value per step per each of the Imager detectors (15 for GOES-8–13; 16 for GOES-O and beyond) or 16 Sounder detectors (distinction between Sounder channels is not required in this case). Linearity verification is performed for each detector by fitting the mean values at the 16 steps to a line using the method of least squares and then computing the 16 individual residuals and their RMS.

The results of the filtering and the least squares fit for each detector, the slope and intercept of each computed line, and the associated residuals and RMS are reported in the GVAR ECAL Block 11s (see Section 3.6.3). A warning is generated and reported in the ECAL Block 11s if the RMS exceeds a specified limit for any detector or there are insufficient filtered samples for a particular step. The RMS limits, sample or step minimums, and high or low filters are reported in the Calibration Coefficients and Limits Block 11s.

It is important to note that filter delays in the Imager data result in invalid samples being downlinked to the SPS preceding the valid ECAL data. These invalid samples are discarded. The number of samples discarded for each Imager detector is specified by the "leading sample discard count/detector" array in the Imager Calibration Coefficients and Limits Block 11s.

3.7 Star Sense Analysis Algorithm

3.7.1 Problem Description

At intervals determined by ground command, the scanning mirror slews to a coordinate through which a star is expected to pass. A space clamp is performed at this coordinate, and for the imager, the detector amplifier gains for each of the eight visible star sense detectors are increased from 108 – 432 (nominal). The scanning mirror settles at this location and waits 2 seconds for the start of the star sense data sequence.

The star passes through the detector's FOV by normal in-orbit rotation of the satellite (0.25° per minute). The star senses last from 1 – 64 seconds as commanded by the ground. While a star sense data sequence is underway, no corrections for image rotation are performed by the instrument. The instrument's optical system provides a diffraction-limited blur spot diameter of approximately 10–15 μrads in the visible spectrum of the sensing detectors. The point spread function associated with the blur spot intensity follows a *sin x/x* distribution.

At the conclusion of a star sense, the instrument slews back to the coordinate it occupied prior to the initiation of the star sense and continues the previously active operation. For the imager, the detector amplifier gains are restored to a value of 108, and the nominal space clamp value is reestablished.

3.7.2 Analysis

A detector is assumed to act as an integrator, providing an output proportional to the total incident illumination and intensity. As a result, the output of a detector for a *sin x/x* blur spot resembles a flattened pyramid whose base width is composed of the following three parts:

a. Up staircase
b. Plateau
c. Down staircase.

The up and down staircases are generated as the blur spot enters and leaves the detector FOV. The step effects, caused by the *sin x/x* intensity lobes, will be unequal as the bulk of the incident energy is contained in the central lobe. The overall width of each staircase will be equal to the width of the incident blur spot divided by the rotation rate. The plateau begins when the bulk of the blur spot is incident on the detector. It represents the peak detector response. The plateau remains in effect as the spot traverses the face of the detector until, at the far edge, the spot staircases out of the FOV. The height of the plateau is a function of the intensity, wavelength, and apparent spot diameter of the target star and is not characterized further. The width of the plateau is a function of the blur spot diameter and detector width. The time characteristics associated with a star sensing use the following terms:

r = Earth's rotation rate = 0.25 degrees per minute = 72.722 μrad per second
w = detector width = 28 μrad
d = star blur spot diameter = 10 μrad (example)
t_1 = up staircase interval, in seconds
t_2 = plateau interval, in seconds
t_3 = down staircase interval, in seconds

The total time of a star crossing can be computed as the time required to sweep through the detector width and the star blur spot diameter as follows:

$$t_t = (w + d)/r = 38/72.722 = 0.5225 \text{ seconds}$$
$$= t_1 + t_2 + t_3$$

Because of the symmetry of the *sin x/x* intensity function, the up and down staircases are equivalent and equal in time to the sweep rate applied to the blur spot diameter as follows:

$$t_1 = t_3 = d/r = 0.1375 \text{ seconds}$$

The resulting plateau time is the following:

$$t_2 = 0.5225 - 0.1375 - 0.1375 = 0.2475 \text{ seconds}$$

The Sounder generates pixels at a rate of 40 pixels per second (10 frames per second x 4 pixels per frame) for the eight star sense detectors. Other than stripping this information from the original downlink data block and repacking it into eight time-ordered arrays, no preprocessing of this information occurs prior to the software analysis. Since the star sense interval can range from 4 – 64 seconds in duration, the number of pixels included in the analysis of each detector can range from 160 – 2560 pixels. The occurrence of a star crossing event involves approximately 21 pixels from a particular array, 10 of which will be registering a plateau while the remaining 11 are split between the up and down staircases.

The analysis performed on the Sounder star sense arrays is described using the terms defined in Table 3-39 and Table 3-40. In addition to the eight time-ordered sample arrays S_i, a ninth array of CDA time stamps T_i is provided as a primary input to the analysis. The time stamp for each raw Sounder data block is assigned to the first of the four associated star sense samples. The remaining three samples are stamped by the cumulative addition of 25-msec increments to the initial CDA time stamp. The remainder of this section presents an algorithm from the viewpoint of a single detector.

The star sense pixel array, P_i, is formed by the moving window averaging filter operating on the input sample array, S_i. An operator specified term, W, specifies the number of raw input samples to be included in the window and is constrained to be a positive integer. The number of star sense pixels generated by the moving window filter is a function of the input sample size, N, the window size, W, and is equal to $N - W + 1$. The intent of the moving window averaging filter is to improve the signal-to-noise ratio of the data prior to analysis. The resulting star sense pixel array, P_i, is employed in the remainder of the computations.

The mean value registered by the detector during the star sense interval *DMV* is computed as the average value of the detector pixel array, P_i. An operator specified constant, *DWT*, is added to the *DMV* to compute a window threshold level, *WTL*, for the detector. The value of *DWT* can be tailored for each of the eight detectors. Its primary function is to provide a first-order filtering of noise effects that may be present in the pixel data. The *WTL* is used to select the subset(s) or window(s) of pixels within array P_i that may contain star information.

The operator specified constant, *WTC*, denotes the number of pixels that must exceed the *WTL* before a star crossing has started. The *WTC* criteria is also applied in a reverse transit through the pixel array to determine the end location of the window(s).

Once a windowed set of pixels has been selected, the window mean value, *WMV*, of the pixels contained within the window is computed. Next, an *ETL* is computed as the level halfway between *WTL* and *WMV*. This level, in conjunction with the operator specified constant *ETC*, is used to locate the pixels at which the windowed event is defined to begin and end.

Table 3-39. Sounder Star Crossing Analysis Terms

Analysis Terms	Equation
input sample array (160 ≤ N ≤ 2560) expanded input time array	$S_i \Big\vert_{1}^{N}$ $T_i \Big\vert_{1}^{N}$
star sense pixel value (W is integer: {1,2,3,...})	$P_i = \frac{1}{W} \sum_{8}^{g+W-1} S_g \quad \Big\vert \begin{array}{l} g = N - W + 1 \\ g = 1 \end{array}$
DMV (interval mean value or detector)	$DMV = \frac{1}{N - W + 1} \sum_{1}^{N-W+1} P_i$
DWT (window threshold tolerance/detector), separate value each detector	$\mathrm{DWT} = \mathrm{constant}_d$
WTL (Window Threshold Level/Detector)	$WTL = DMV + DWT$
WTC (Window Thresholding Count) used with WTL to locate the window start (h) and end (k) indexes	$WTC = \mathrm{constant}_1$
WMV (Window Mean Value)	$WMV = \frac{1}{k - h + 1} \sum_{h}^{k} P_i$
ETL (event thresholding level)	$ETL = WTL + \frac{WMV - WTL}{2}$
ETC (event thresholding count) used with ETL to locate event start (m) and end (n) indices	$ETC = \mathrm{constant}_2$
EMV (event mean value)	$EMV = \frac{1}{n - m + 1} \sum_{m}^{n} P_i$
TEV (time of event)	$TEV = T_m + \frac{T_n - T_m}{2}$

Table 3-40. Imager Star Crossing Analysis Terms

Analysis Terms	Equation
input sample array (100 ≤ N ≤ 6400) input time array	$S_i \Big\vert_{1}^{N}$ $T_i \Big\vert_{1}^{N}$
star sense pixel value (W is integer: {1,2,3,...}) (2 ≤ M ≤ 1024)	$P_i = \frac{1}{4MW} \sum_{8}^{g+W-1} S_g \Big\vert_{g=1}^{g=N-W+1}$
DMV (interval mean value or detector)	$DMV = \frac{1}{N-W+1} \sum_{1}^{N-W+1} P_i$
DWT (window threshold tolerance/detector), separate value each detector	$\mathrm{DWT} = \mathrm{constant}_d$
WTL (Window Threshold Level/Detector)	$WTL = DMV + DWT$
WTC (Window Thresholding Count) used with WTL to locate the window start (h) and end (k) indexes	$WTC = \mathrm{constant}_3$
WMV (Window Mean Value)	$WMV = \frac{1}{k-h+1} \sum_{h}^{k} P_i$
ETL (event thresholding level)	$ETL = WTL + \frac{WMV - WTL}{2}$
ETC (event thresholding count) used with ETL to locate event start (m) and end (n) indices	$ETC = \mathrm{constant}_4$
EMV (event mean value)	$EMV = \frac{1}{n-m+1} \sum_{m}^{n} P_i$
TEV (time of event)	$TEV = T_m + \frac{T_n - T_m}{2}$

The value of *ETC* specifies the number of sequential pixels with the values exceeding *ETL* that defines the edge of a star crossing event. The following two passes are made through each set of windowed pixels:

1. In the forward direction to locate the rising edge of the event.
2. In the reverse direction to locate the falling edge of the event.

In the forward pass, the last of the ETC pixels defines the start of the event; and, similarly, in the reverse pass, the last (i.e., the point in time when the detected signal starts to fall) of the *ETC* pixels defines the end of the event.

The CDA *TEV* is computed at the mid-point time of the inclusive pixel set. The above analysis is repeated for each windowed subset of pixels in the detector's array. The entire analysis is repeated for each of the remaining seven detector arrays.

With some variations, the preceding analysis described for the Sounder also applies to the Imager star sense data. The applicable Imager data analysis terms are defined in Table 3-38. The primary difference between the two analysis lies in the formation of the start sense pixel array, P_i.

The Imager generates 21,840 pixels per second from each of the eight star sense detectors and can perform a simple star sense up to 64 seconds in length. Extended star sense intervals exceeding 64 seconds can also be performed if the star sequence mode has been commanded. Thus, preprocessing of the Imager star sense data by the SPS's SDI software processes are required to reduce the volume of Imager data generated to a manageable size. To accomplish this reduction, the SDI software processes sum $4M$ raw pixels to generate each input sample, S_i. The summation is performed prior to entry of the sample into the SPS's memory. M is an operator-modifiable database constant that specifies the number of Imager data blocks to be included in the sum and is restricted to a range of 2-1024. The nominal value of M is 55, yielding an input sample timing resolution of 10.07 msec.

Each Imager raw data block provides four pixels from each of the eight star sensing detectors, corresponding to a pixels per sample sum between 8 - 4096 generated by the SDI software processes. For the default case of $M = 55$, the SDI software processes would generate about 99 input samples per second for each detector.

Assuming a 10-µrad blur spot star event, 51 samples would be involved with the event, 24 registering a plateau, and the remaining 27, split between the up and down staircases.

The Imager sample time array, T_i, contains the CDA time tags associated with the last raw block included in each sample sum generated by the SDI software processes. The star sense pixel array, P_i, for each visible detector is formed using a moving window averaging filter similar to the one described for the Sounder star sense. The difference between the two is that the Imager version includes the factor $1/4M$ in the averaging algorithm to compensate for the effects of the summing operation performed by the SDI software processes.

Section 4.0 GIMTACS/SSGS-OGE Interface

This section describes the communication interfaces among the GIMTACS/SSGS, the OGE elements, and the AGC monitor and includes the following information:

a. Section 4.1 includes a general overview of the physical links and protocols used to transfer data between the various computer systems.

b. Section 4.2 contains a description of the GIMTACS/SSGS-OGE communication protocols, including Ethernet, Internet, and DECNet protocols.

c. Section 4.3 contains a description of the communication messages between the systems, including a list of messages no longer needed for SSGS, and a short description of the SSGS unique interactions.

4.1 Overview

GIMTACS consists of three components: TCS computers, CCs, and workstations. These components communicate with each other using the Ethernet protocol. Three of the five OGE subsystems identified in Section 1.2 interface with GIMTACS: the SPS, PM, and OATS. The AGC also has an OGE type interface with GIMTACS. A description of these interfaces follow.

The following details the interfaces at the CDAS in Wallops Island, VA:

a. The SPS console workstation has a full duplex RS-232 link to a GIMTACS CC for message exchange with GIMTACS, OATS, and PM. The TCP/IP network protocol is used.

b. PM computers have a full duplex RS-232 link to a GIMTACS CC for message exchange with OATS and the SPS. The TCP/IP network protocol is used.

c. OATS workstations and a WAN router are grouped as an Ethernet LAN segment on the DEChub 900 and bridged to the GIMTACS operational LAN. The bridge connection is normally off, with connectivity between the CDA and SOCC OATS workstations provided by the WAN connection to the OATS at SOCC. The bridge connection is activated only if there is a WAN failure, providing inter-OATS connectivity through the GIMTACS operational LAN.

d. One AGC monitor compiles receiver AGC voltage levels from active TACTSs for transfer to GIMTACS. The GIMTACS transfer occurs through an Ethernet connection using the IP and UDP protocols.

A backup CDAS is established at the NASA GSFC. This facility supports one GOES spacecraft with a single string configuration of RF, GIMTACS, SSGS, and OGE components functionally identical to those at the Wallops CDAS.

The Fairbanks CDAS can also assume all functions for a single satellite and is currently the backup CDAS for GOES-11. The FCDAS has two TACTS and two CCs, but it only has a single TCS, GTACS, SPS, and PM. It has no OATS. The single GOES capable antenna limits it to a single satellite stream.

The SOCC, located in Suitland, MD, interfaces as follows:

a. Each of the PMs has a full duplex RS-232 link to a GIMTACS CC for message exchange with OATS and the SPS. The TCP/IP network protocol is used. SSGS uses TCS/IP for communication between GTACS and the PMs.

b. The OATS workstations and their WAN router are grouped as an Ethernet LAN segment on the Cisco switch and bridged to the GIMTACS operational LAN. The bridge connection permits GIMTACS-OATS message exchange while isolating internal OATS traffic from the GIMTACS operational LAN.

T1 multiplexers and associated routers provide WAN connectivity between the CDASs and SOCC, and access to the Nascom network using TCP/IP. Nascom, in turn, provides connectivity to SS/L, the spacecraft contractor; and the DSN ground stations for launch, dwell telemetry, and spacecraft ranging support.

4.2 GIMTACS/SSGS - OGE Communication Protocol Descriptions

This section provides a general description of the IP, TCP, UDP, DECnet, and Ethernet LAN protocols used for OGE-GIMTACS and OGE-SSGS communications.

4.2.1 Ethernet (IEEE 802.3) LAN

The Institute of Electrical and Electronic Engineers (IEEE), under the auspices of the American Standards Institute (ANSI), organized the 802 Committee to establish LAN standards. In turn, the 802 Committee organized separate subcommittees to develop standards for the various existing LAN topologies, as well as to develop standards for new technologies. One of these subcommittees is 802.3, which is responsible for Carrier Sense Multiple Access with Collision Detection (CSMA/CD) networks. The IEEE 802.3 standard is synonymous with the term Ethernet, a LAN concept originally developed by the XEROX Corporation.

The IEEE 802 LAN is a shared medium, peer-to-peer communication network in which information is received by all connected nodes. Direct point-to-point and multicast message exchange between nodes is provided through the common physical medium without any intermediate switching node.

The IEEE 802.3 standard corresponds to the lowest two layers of the Open System Interconnection (OSI) architecture, the physical and the data link layers. The physical layer performs signal encoding and decoding, synchronization by preamble generation and removal, and bit transmission and

reception. The data link layer provides one or more Service Access Points (SAPs) to the upper protocol layers, assembles data into frames with addresses and error control checksums, disassembles and error checks received frames, and governs access to the transmission medium. These two layers are described in the following subsections.

4.2.1.1 IEEE 802.3 Physical Layer

The IEEE 802.3 standard encompasses various physical media and topologies, both baseband and broadband. GIMTACS and the OGE elements use the 10BASET implementation with the following characteristics:

a. Ten Mbps data rate

b. Manchester-encoded baseband signaling

c. Unshielded Twisted Pair (UTP) cabling from stations (nodes) to a multiport repeater (i.e., DEChub 900)

d. Maximum segment length of 100 meters from any station to the hub.

The standard acknowledges the desirability of locating stations a distance away from the attachment point to the medium. The interface portion collocated with the DEChub is referred to in the standard as the Medium Attachment Unit (MAU). The interface between the MAU and the station is then provided by two UTPs, one for each direction of transmission. The MAU is responsible for transmitting and receiving signals to and from the medium and sensing the presence of a signal on the medium. The DEChub is responsible for repeating received signals to all stations, recognizing collisions, and transmitting a jamming signal, collision enforcement, to all stations to indicate a collision has occurred.

4.2.1.2 IEEE 802.3 Data Link Layer

In the IEEE 802 standards, the data link layer is comprised of two sublayers:

a. A Logical Link Control (LLC)
b. A Medium Access Control (MAC).

Division into two sublayers permits the same LLC sublayer implementation to support all the different IEEE 802 MAC implementations. Another reason for this division is the logic required to manage access to the shared medium does not exist in traditional layer 2 data link control protocols.

4.2.1.2.1 IEEE 802.3 Medium Access Control Sublayer

In the IEEE 802.3 MAC protocol, a station ready to transmit listens to the medium and waits until the medium is idle before transmitting. If a collision is subsequently detected, a jamming signal is transmitted to notify all network nodes. The transmitting node waits a random number of slot times (twice the medium's propagation time plus the MAC layer jam time) before retransmitting its packet.

Each time a station experiences a collision on a particular message, it waits a greater number of slot times before retransmitting. The transmitting node gives up and reports an error after 10 retransmission attempts. Thus, while the MAC sublayer does not guarantee delivery, it guarantees that packets have been transmitted without collision. Packet loss occurs due to receive failure at a receiving station, not due to transmission problems.

The MAC frame format is shown in Figure 4-1. The frame length ranges from 64 to 1518 octets. The Part Approval Document (PAD) field is used, as needed, to ensure a minimum length frame. The destination address may be a single destination, a multicast address, or a broadcast address. The length field is the length of the packet sent by the LLC layer. The FCS is a CRC based on all fields except the preamble and the Start Frame Delimiter (SFD).

4.2.1.2.2 IEEE 802.3 Logical Link Control (LLC) Sublayer

The LLC protocol is modeled after the OSI High-Level Data Link Control (HDLC) protocol. Three LLC protocols are defined in the standard and support the three service types, unacknowledged connectionless service, connection mode service, and acknowledged connectionless service. Stations can support more than one service type as indicated by the station class. The GIMTACS-OGE LANs are Class I, supporting unacknowledged connectionless service. Point-to-point guaranteed delivery service is provided at the network and transport levels by the DECnet and TCP protocols. These protocols perform flow control, error control, and acknowledgment. Multicasting is performed at the Ethernet MAC level.

All three LLC protocols use the same Protocol Data Unit (PDU) format shown in Figure 4-2. In the unacknowledged connectionless (Type 1) service, there is no flow control, acknowledgment or error control. Unnumbered Information (UI) frames are used and frames containing errors are discarded at the MAC level. The UI-frame control field format is as shown for a U-frame in Figure 4-2. All five M (modifier) bits are zero, as is the Poll/Final (P/F) bit, which has no significance. Thus, the control field is 11000000. Type 1 service has two other PDU types, an eXchange IDentification (XID) PDU and a TEST PDU. The XID PDU is used to exchange information on the types of services supported by a source and destination pair; and in the case of Type 2 service, the flow control window size. The TEST PDU is used to conduct loop-back tests of the transmission path between two LLC entities. Upon receipt of a TEST command PDU, the addressed LLC entity sends a TEST response PDU as soon as possible.

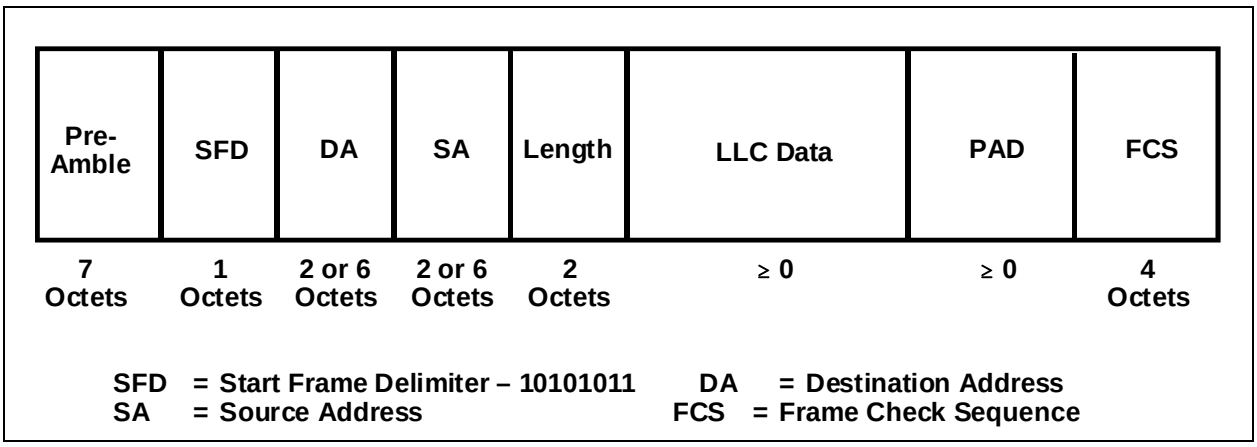

Figure 4-1. IEEE 802.3 MAC Layer Frame Format

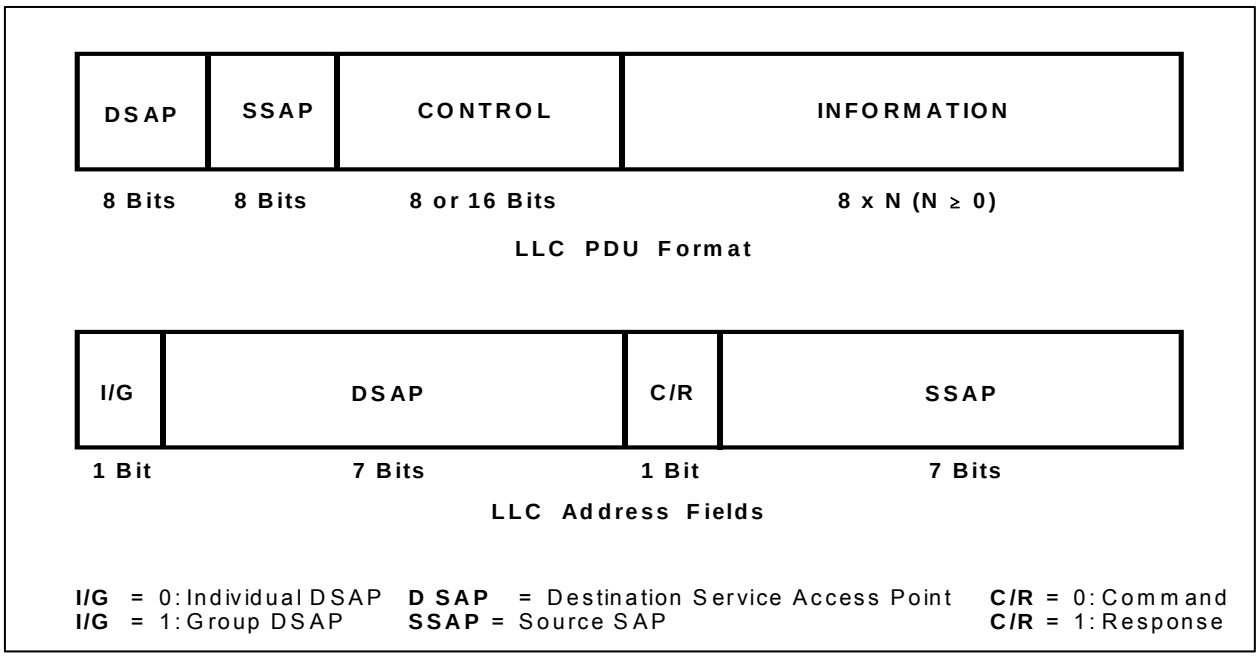

Figure 4-2. IEEE 802 LLC PDU Format

4.2.2 Internet Protocol Suite

Starting in the mid-1970s, the Defense Advanced Projects Agency (DARPA) funded the development of protocols that would allow communications across any set of networks. The end result of that funding effort was the Internet Protocol suite, of which TCP and IP are the best known.

Development and documentation of Internet protocols is accomplished through *Request for Comments (RFCs)* documents having a unique number. The RFCs are reviewed and analyzed by the Internet community, and refinements are published as new RFCs. Typically, the entire Internet protocol suite is termed TCP/IP, although is comprises application level protocols besides TCP and

IP. Figure 4-3 shows the relationship between the OSI reference model and the various protocols in the Internet suite. This brief introduction presents IP, TCP, UDP, FTP, Simple Network Management Protocol (SNMP), Remote Terminal Emulation Protocol (Telnet), and NFS protocols. These are the protocols used in the GOES ground system for data transfers between GIMTACS and the AGC, and within the SPS. SNMP, although virtually transparent to the user, is briefly described since it is used for configuration and management of the DEChubs and WAN circuit routers.

4.2.2.1 Internet Protocol

IP is the primary network layer protocol in the Internet suite. It provides routing, packet (datagram) fragmentation and reassembly, and error reporting. Figure 4-4 shows the IP packet format and field definitions. The address lengths are 32 bits, commonly written in a dotted decimal format with four fields. Due to the explosive growth of the Internet, the 32-bit IP address length is no longer sufficient to accommodate future growth. A new version of IP, IP Version 6, has been under development and will provide expanded address space as well as correcting other shortcomings of the current IPv4. IP addressing is not covered in this document.

An important field within the IP format is the protocol number, a 1-byte field identifying the upper-layer protocol within the receiving host where incoming packets should be routed; for example, TCP or UDP. This is the mechanism used by IP to multiplex all the upper layer processes using its services.

Within LANs the Address Resolution Protocol (ARP) and the Reverse ARP (RARP) are used to determine MAC addresses and network device IP addresses dynamically. ARP uses broadcast messages to determine the MAC-layer address of particular IP addresses. RARP, in turn, uses broadcasts messages to determine the IP address corresponding to particular MAC addresses, a necessity for networks in which IP addresses are assigned dynamically when devices log on. The addressed device replies to the broadcast, returning its IP and MAC addresses. The Internet Control Message Protocol (ICMP) provides echo requests and reply messages useful in testing node reachability, as is used by the *ping* program. Within an internetwork ICMP provides other control capabilities, primarily used by routers to find subnetwork addresses and redirect message flows more efficiently. The *ping* application uses these echo requests.

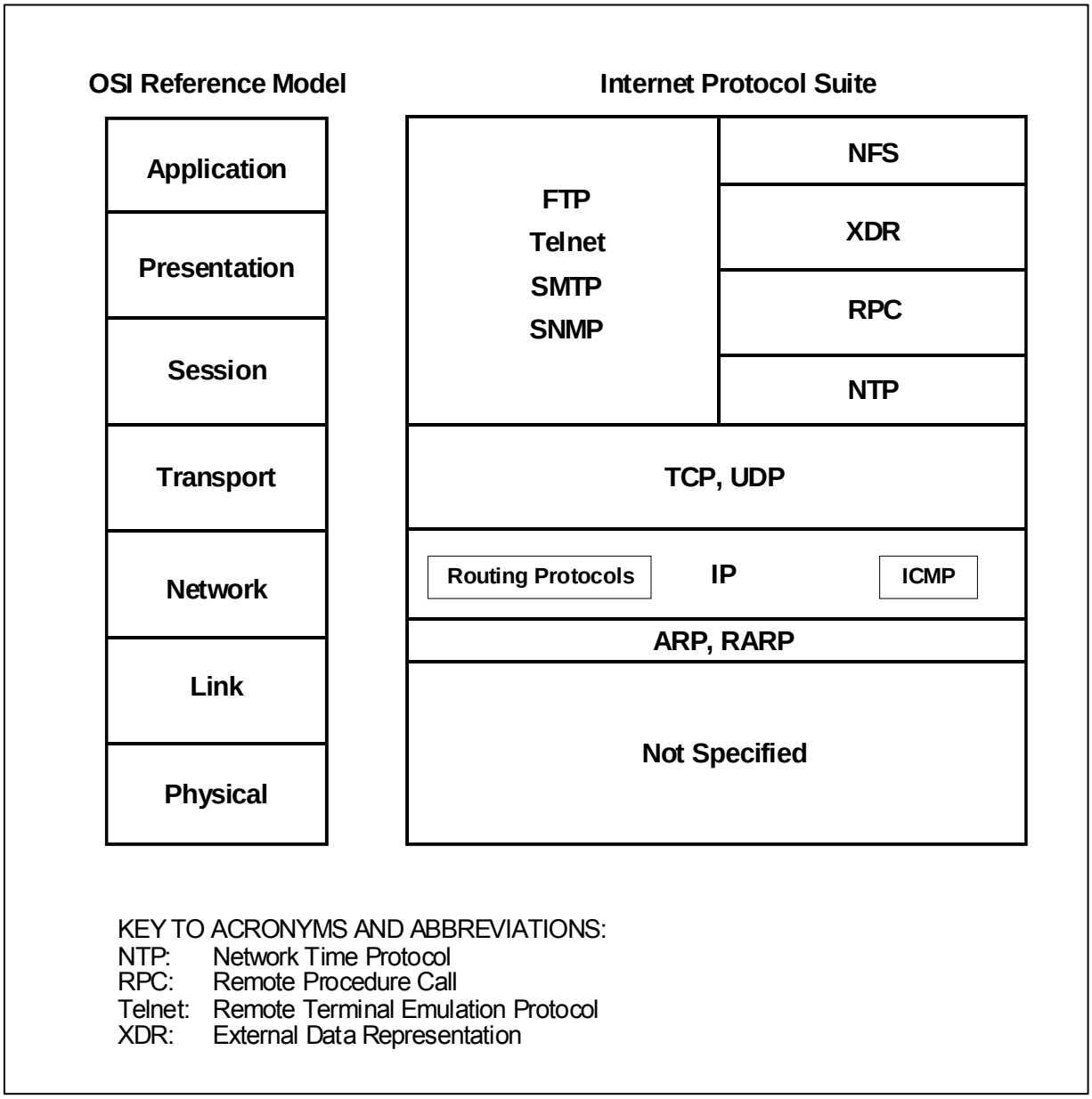

Figure 4-3. Internet Protocol Suite and OSI Reference Model Relationship

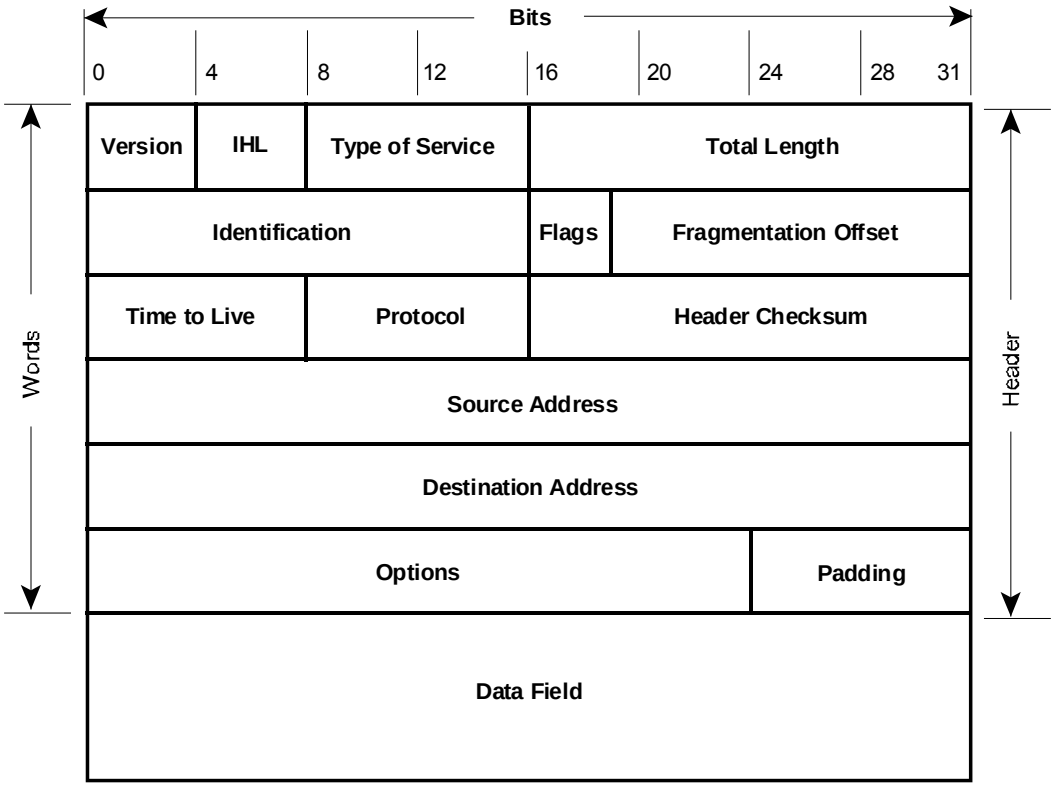

Field Definitions:

Version:	Version of IP in use.
IHL:	IP header length in 32-bit words.
Type of Service:	Importance level of packet as assigned by an upper layer protocol.
Total Length:	Total length of the packet, data and header, in octets.
Identification:	An integer identifying the current packet, used for reassembling packets.
Flags:	A 3-bit field used for fragmentation control.
Fragmentation Offset:	Position of a fragment in the original datagram, in multiples of 64 bits
Time to Live:	A number of hops counter used to control how long a packet stays in the network before being discarded.
Protocol:	Identification of the upper layer protocol to receive the incoming packets after IP processing is complete.
Hdr Checksum:	CRC for error detection.
Source Address:	Address of the sending node.
Dest. Address:	Address of the receiving node.
Options:	Specification of service options, such as security, supported for the packet.

Figure 4-4. IP Packet Format

4.2.2.2 Transmission Control Protocol (TCP)

TCP is the Internet suite's connection-oriented transport layer protocol. It provides full-duplex, acknowledged, and error- and flow-controlled data transport to upper layer protocols. Figure 4-5

shows the TCP data packet format. The first three rows in the figure comprise a 96-bit pseudo header containing the source and destination IP addresses, protocol identification, and TCP packet segment length in octets. This information is passed to IP as part of the Send primitive. The checksum in the TCP header is calculated prior to transmission and includes the pseudo header, which protects from misdelivery by IP.

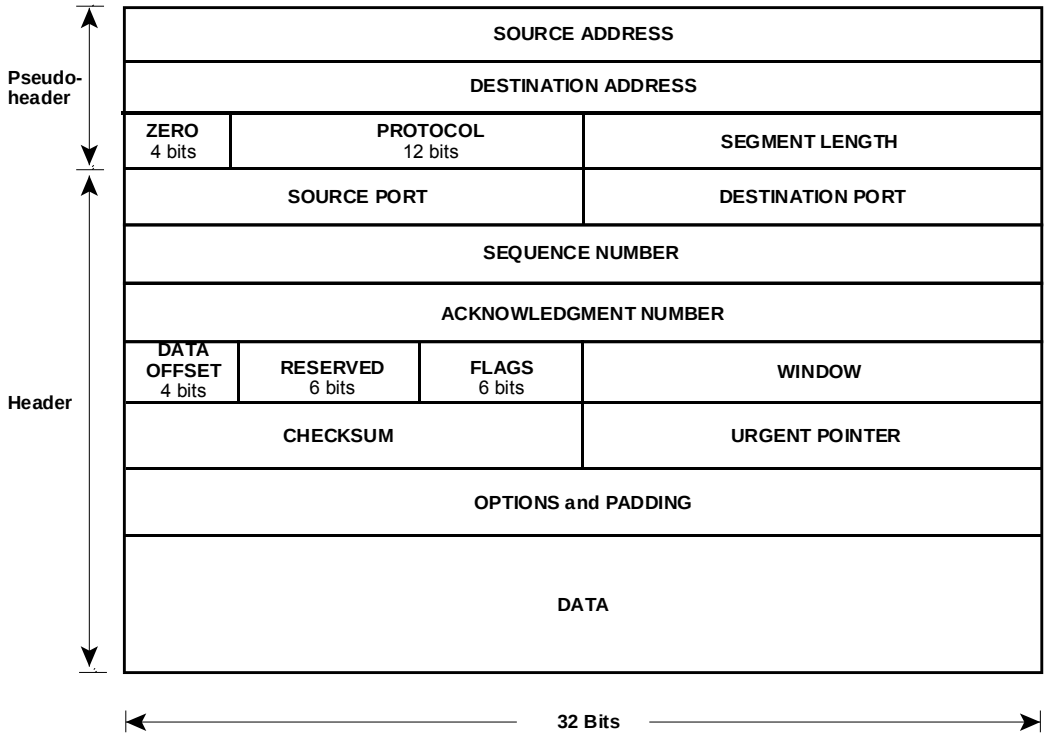

Field Definitions

Source and Destination IP Addresses:	Same as in the IP Header (Figure 4-8)
Zero:	Field containing eight 0's
Protocol Identifier:	6 for TCP
Segment Length:	Length of the header and data in octets
Source and Destination Ports:	The TCP port numbers used for the connection
Sequence Number:	Sequence number of the first data octet in this segment. If SYN is set (see Flags), the sequence number value is the initial sequence number (ISN); and the first data octet is ISN + 1
Acknowledgment Number:	The sequence number of the next octet the TCP entity is expecting to receive
Data Offset (four bits):	The header length in 32-bit words
Reserved (six bits):	Field reserved for future use
Flags (six bits):	URG – The Urgent pointer field is significant ACK – The Acknowledgment field is significant PHS – Push function RST – Reset the connection SYN – Synchronize the sequence numbers FIN – No more data from sender
Window Size:	The number of data octets beginning with the one indicated in the ACK field that the sender will accept
Checksum:	Error detection for the pseudoheader, header and data
Urgent Pointer:	Points to the octet following the urgent data
Options:	Service options, such as the maximum acceptable segment size.

Figure 4-5. TCP Header and Pseudo Header Format

During connection establishment, TCP assigns a unique source port number to the upper layer protocol or process requesting its services. The source TCP then requests a connection to its peer TCP at the destination host through IP. The destination TCP assigns a unique destination port number to the destination process and returns this information to the source TCP. The combination of source and destination port numbers and the source and destination IP addresses uniquely identify a TCP connection; thus, allowing TCP to support multiple connections concurrently. It is this combination of port number and IP address that is referred to as a socket.

There are two types of TCP ports available. One type is referred to as a *well-known port*, assigned to particular network services commonly supported; for example, FTP always uses port number 21. The second type is called a *dynamically assigned port*. These port numbers are assigned to processes as needed.

When a process requests, for example an FTP connection to a remote host, TCP dynamically assigns a port number to the source process; and, the well-known port number is used for the destination port number. The source and destination sockets uniquely identify the FTP connection so the destination TCP can support multiple FTP requests.

4.2.2.3 User Datagram Protocol (UDP)

UDP is a connectionless version of TCP useful in situations where TCP's reliability is not needed. The UDP header contains four fields:

a. Source port numbers
b. Destination port numbers
c. Datagram length
d. Optional checksum.

The source and destination port fields are the same as in TCP. The datagram length includes the header and data, plus an octet of padding if the data field is not an even multiple of 16 bits. UDP also uses a pseudo header identical to the TCP pseudo header, except for protocol value 17 that is included in the checksum computation. If not used, the checksum field is zero filled. UDP is used to pass AGC Monitor data from the TACTS to GIMTACS.

4.2.2.4 Higher Layer Protocols

Higher layer protocols available in the Internet Protocol Suite, which are used in the GOES ground system, are described in the following sections.

4.2.2.4.1 SNMP

SNMP provides a remote monitoring and management mechanism for network devices. In GOES, SNMP is used by the DEChub console station to manage, monitor, and configure the hub switches and the WAN routers. The management console workstation acts as the SNMP client, and the

DEChub switches and routers are SNMP servers. The devices maintain a Management Information Base (MIB) containing all relevant configurations, diagnostic and performance data. In typical operation, the client polls the servers to obtain status data and issue commands. Devices can also concurrently run a separate SNMP client process. This client allows the devices to report critical data to a *trap* server process running on the management station that cannot wait until the next poll from the management station.

4.2.2.4.2 NFS

The NFS protocol is used in the SPS analysis system to allow devices to access files on the disk drives of remote devices as if the files were local. Devices can operate as:

a. NFS servers, exporting disks for access by other devices.
b. Clients, accessing NFS server device disks.
c. Both clients and servers, accessing and exporting information.

The NFS client contacts the desired NFS server to request access to a file system, a process called *mounting*. If the server determines the requesting client is allowed access, it gives the client a *file handle* for access to the requested file. Once a client has mounted the desired file system, it must send a request to the NFS server for each separate file it wants to access. This access request includes the file handle previously granted by the server and a description of what the client wants to do with the file. The NFS protocol does not include a mechanism that allows the server to cancel file handles. So, file handles remain active until the server process is reinitialized.

4.2.2.4.3 File Transfer Protocol

FTP is used to transfer all types of files across networks, such as downloading SPS data from the WCDAS to the SOCC SPS analysis workstations. FTP uses two separate TCP connections. One is called the command channel, which carries commands and returns results. The second is called the data channel, which carries the actual data files and directory listings. On the server end, the command channel uses Port 21 and the data channel uses Port 20. Typically, the client uses ports above 1023 for both channels.

To start an FTP session, the client allocates two channels. The first serves as the command channel, used to open a connection to the server. As part of the connection, the client notifies the server of the data channel port number. Then the server opens the data channel connection back to the client.

4.2.3 DECnet Protocol

DECnet supports a variety of standard and proprietary protocols, and media and link implementations, such as Ethernet. DECnet provides a datagram transport service through its routing layer. The transport layer is called the Network Services Protocol (NSP), which provides error control checking, flow control, and message retransmission. Within Ethernet LANs, a 21-byte

routing header is appended to source data packets. DECnet is used for point-to-point messages within the GIMTACS LANs.

4.3 Communication Messages

This section first describes the GOES N-P unique interfaces that are not described in the 504-02 message tables. Next it describes the generic message format including the format of the message header in detail, the store and forwarding of messages, and some significant message fields, coefficient sets. It then describes in detail each message by originating system in the following order: SPS, MRSS, PM, OATS, GIMTACS/GTACS, and AGC.

4.3.1 GOES N-P Unique Interfaces – No DRL 504-02 Heritage (SSGS)

This section describes the data exchanged among the SSGS elements. GTACS provides a data exchange service among the various SSGS elements; therefore, this section addresses these relationships with respect to the elements involved in the exchange rather than the function. Table 4-1 identifies which SSGS elements have maintained use of the 504-02-like messages.

Table 4-1. SSGS Interface Heritage

To / *From*	GTACS	NTACTS	OATS	MRS&S	DID	SPS	RPM
GTACS	N-P Unique	N-P Unique	504-02 format	504-02 format		504-02 format	504-02 format
NTACTS	N-P Unique						
OATS	504-02 format		504-02 format				
MRS&S	504-02 format				N-P Unique		
DID				N-P Unique			
SPS	504-02 format						
RPM	504-02 format						

4.3.1.1 GTACS/NTACTS

The interface between GTACS and NTACTS does not use the 504-02 message format for data exchange. The interface is that defined by the CORTEX^{NT} TCP/IP protocol. The primary exchange between the two elements consists of telemetry minor frames, S/C commands, NTACTS status, and CORTEX^{NT} control. Details of CORTEX^{NT} TCP/IP interfaces are defined in the *Command, Ranging & Telemetry Unit (CORTEX^{NT}) Generic Ethernet Interface* document. (When using the CORTEX^{NT} referenced material note that "Word" indicates a 32-bit computer word.)

4.3.1.1.1 PCM Telemetry Data

NT1694 and NT2209 from NTACTS are received by GTACS over a one-to-one socket-based connection. The use of TCP/IP socket protocol ensures data transmission integrity between elements. The primary data flow from NTACTS to GTACS consists of ground-receipt-time tagged PCM minor frames.

NTACTS bit-synchronizes a minor frame and time tags it to the last bit of the frame. A minor frame is 4096 bits or 512 words (bytes). The words are numbered 0-511. Normal and dwell PCM minor frames share a basic structure depicted in Table 4-2. The remaining 504 words (7-510) are available for other telemetry. A major frame consists of 32 minor frames.

Table 4-2. Telemetry Minor Frame Organization

Minor Frame Word	Bit	Function
0	0-7	Frame sync, hex (FA)
1	0-7	Frame sync, hex (F3)
2	0-7	Frame sync, hex (20)
3	0-7	Spacecraft ID
4	0	CTCU telemetry formatter ID: 0 = CTCU A 1 = CTCU B
	1	PCM stream ID: 0 = NT2209, 1 = NT1694
	2-4	Format ID: B2 B3 B4 Format 0 0 0 0 0 0 1 1 0 1 0 0 0 1 1 0 1 0 0 0 1 0 1 0 1 1 0 0 1 1 1 7 (unit test)
	5	Fixed logic 0
	6	Normal/dwell mode, 0 = normal
	7	Data bus select: 0 = bus A, 1 = bus B
5	0-2	Fixed logic 0
	3-7	Minor frame count (0-31)
6	0-7	Dwell word ID
511	0-7	Checksum (generated by adding all of the previous minor frame words together and transmitting the 8 least significant bits of the result)

Note: Unless otherwise specified, bit 0 is the MSB and the first bit transmitted.

The spacecraft is identified by virtue of S/C database definitions activated by the GTACS workstation. The workstation page containing the stream includes the corresponding Spacecraft ID and telemetry stream ID.

Minor frames are transmitted via the LAN from NTACTS to GTACS using CORTEX^{NT} TCP/IP messages. Each captured minor frame is a fixed-length message and is embedded in a TCP/IP packet. The complete NTACTS to GTACS minor frame transmission packet is described in Table 4-3. A 12-byte message header of the structure in Table 4-4 precedes the telemetry minor frame packaging. A 4-byte message trailer described in Table 4-5 terminates all TCP/IP messages.

Table 4-3. CORTEX^{NT} Minor Frame Packet

Word	Type	Value	Description
0 to 2	Integer	Size of message = 4*N	Standard CORTEX^{NT} header
3	Integer	First field (see Note 1)	Time-tag
4	Integer	Second field (see Note 1)	Time-tag
5	Integer	0 to FF FF FF FF_H	Sequence counter
6	Integer	Frame checking ON : 0 : OK 1 : Error Frame checking OFF & RS decoding ON 0 : Reed Solomon correction OK 1 : Correction capacity exceeded	Frame check result (see Note 2)
7	Integer	0 : Frame sync. OFF 1 : Frame sync. ON, LOCK 2 : Frame sync. ON, FLYWHEEL 3 : Frame sync. ON, SEARCH	Frame synchronizer status
8	Integer	0 : No bit slip 1 : Bit slip occurred	Bit slip status
9	Integer	0 to 1024 (see Note 3)	TLM delay
10 to 15		Unused	
16 to N-2	_	32-bit words (see Note 4)	Telemetry minor frame
N-1	Integer	-1234567890	Standard CORTEX^{NT} trailer

Note 1: Telemetry messages (more precisely the **last bit of each frame or block**) are time-tagged to within an accuracy of better than 1 ms.

Note 2: Not significant if the frame synchronizer is OFF.

Note 3: Delay, expressed in number of frames or blocks, between real-time telemetry and transmitted telemetry. (0 means real-time telemetry.)

Note 4: Telemetry frames and blocks are 32-bit aligned (LSBs of the last word are zero-filled if the frame or block length, in bytes, is not a multiple of 4).

Table 4-4. Standard CORTEXNT Message Header

Word	Type	Value	Description
0	Integer	1234567890	Start of message
1	Integer	X	Size of message in bytes (including header and trailer)
2	Integer	User Configurable	Flow identification

Table 4-5. Standard CORTEX^{NT} Message Trailer

Word	Type	Value	Description
---	Integer	-1234567890	End of message

4.3.1.1.2 NTACTS Status

GTACS uses the following message types for NTACTS specific interface exchanges. Each message listed below is described fully in the *Command, Ranging & Telemetry Unit (CORTEX^{NT}) Generic Ethernet Interface* document.

a. Monitoring messages used to monitor the T&C interactions/status:
   1. Software and ICD Version ID.
   2. Global CORTEX^{NT} Table.
   3. Telecommand Unit Table.
   4. Telemetry Simulator Table.
   5. Ranging Unit Table.
   6. IF Modulator Table.
   7. IF Receiver Table.
   8. Telemetry Unit Table.
   9. Noise Generator Table.
   10. All Components Table.

b. Control messages to initiate T&C actions:
   1. CORTEX^{NT} Initialization Command.
   2. "Carrier Acquisition Restart" Command.
   3. "Wait for Absolute Time" Abort Command.
   4. "Abort all pending TC operations" Command.
   5. "Stop Ranging Measurement" Command.

c. Telemetry data messages for telemetry collection:
   1. Telemetry Request.
   2. Telemetry Negative Acknowledgement Message.
   3. Telemetry Message.

d. Satellite Telecommand (TC) to control spacecraft commanding activities:
   1. Clear S/C TC Request.
   2. "Execute" Instruction.
   3. "Pause" Instruction.
   4. "Wait for Absolute Time" Instruction.
   5. "TCU Unlock" Instruction.
   6. "NOP" Instruction.
   7. "Stop Idling" Instruction.
   8. "Group" Instruction.

e. TC Acknowledgement messages to comply with CORTEX^{NT} protocol:
   1. Acknowledgement for Clear Satellite TC Request.
   2. Acknowledgement for "Execute" Instruction.
   3. Acknowledgement for "Pause" Instruction.
   4. Acknowledgement for "Wait for Absolute Time" Instruction.
   5. Acknowledgement for "TCU Unlock" Instruction.

6. Acknowledgement for "NOP" Instruction.
7. Acknowledgement for "Stop Idling" Instruction.
8. Acknowledgement for "Group" Instruction.

f. Logging data to maintain operational history and status:
   1. Configuration Change Event.
   2. TC Request or Instruction.
   3. TC Acknowledgement Event.

4.3.1.1.3 Spacecraft Commanding

GTACS transmits spacecraft commands to NTACTS over a one-to-one socket-based connection utilizing TCP/IP socket protocol. The primary data flow from GTACS to NTACTS is command messages in uplink format. GTACS interfaces with the encryption equipment, as required, to encrypt the commands before packaging for submission to NTACTS. Once encrypted, GTACS uses the CORTEX^{NT} clear command packet for transfer to NTACTS. Table 4-6 defines the format of the clear-command uplink request packet. The generic spacecraft command form is presented in Figure 4-8 for completeness, as specified by the *Specification for the GOES N-P Spacecraft - Spacecraft to Ground Database ICD*.

Table 4-6. Clear Command Uplink Request

Word	Type	Value	Description
0 to 2	Integer	Size of message = 4*N (operation dependent)	Standard CORTEX^{NT} header
3	Integer	1 (clear satellite TC request)	Request code
4	Integer	Any 32-bit word for logging purpose	Command tag
5	Integer	0 to 16384 (in bits)	TC message length
6	_	First word to send (MSB first)	Data 0
7	_	Next word to send if length > 32 bits	Data 1
...	_	...	...
N - 3	_	Last word to send	Data n
N - 2	Integer	X	Check-Sum
N – 1	Integer	-1234567890	Standard CORTEX^{NT} postamble

4.3.1.2 MRS&S/DID

This interface provides control of the MRS&S by the DID operator, requests for real-time and archived data by the DID from the MRS&S, and transmission of data from the MRS&S to the DID. This interface is fully defined in the *GOES N-P SSGS MRS&S to Client Interface Control Document*.

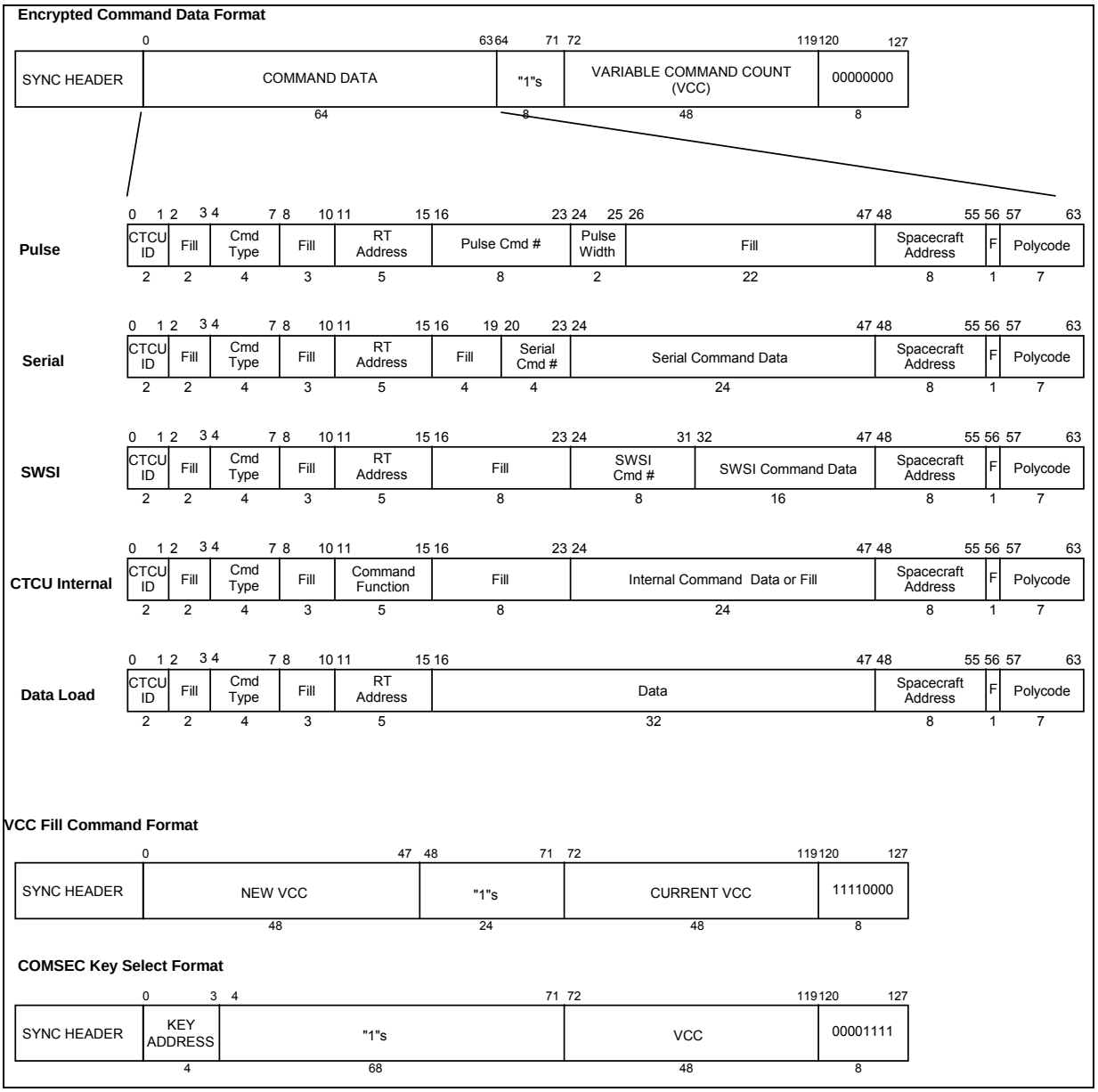

Figure 4-6. Uplink Command Format

4.3.2 Generic Message Format

The message format between GIMTACS/SSGS and OGE elements comprises of a 32-octet fixed-length header and a variable-length data block of up to 3552 octets (1776, sixteen-bit half-words). The GIMTACS/GTACS-OGE has a total maximum message length of 3584 octets. The basic message layout is shown in Figure 4-1. All header fields are binary. DRL 504-02 - like messages are retained in SSGS for communications between all SSGS elements except GTACS and NTACTS, as described in Section 4.3.1. The message numbers have been retained from GOES I-M where

appropriate; however, some messages have been deleted and others added. Table 4-7 lists the set of GOES I-M messages that have not been retained for GOES N-P due to spacecraft differences. For SSGS, although the message format has been retained, messages are passed using a point-to-point socket protocol. Therefore, messages are sent to a specific receiving system, not broadcast as in the GOES I-M system.

Table 4-7. Unused GOES I-M Messages (on SSGS)

Message No.	Source	Destination	Mode	Content	Rate	Data Blk Length (16-bit half wds)
53	OATS	GTACS	Sol	Look up Table	as required	1072
58	OATS	GTACS	Unsol	Trim Tab Command Data	1/day	12
61	OATS	GTACS	Unsol	DIRA Drift Command	7/yr	6
63	OATS	GTACS	Unsol	SSAA IMC Set Ready	As required	42
66	OATS	GTACS	Unsol	DIRA Data request	as required	variable
67	OATS	GTACS	Unsol	Trim Tab Data request	1/day	variable
81	OATS	GTACS	Unsol	MMC Scale Factors	2/yr	18
85	OATS	GTACS	Unsol	MMC Calibration Data request	2/yr	variable
87	OATS	GTACS	Unsol	SMC Data request	as required	variable
88	OATS	GTACS	Unsol	Thermal Snap data request	as required	variable
166	GTACS	OATS	Sol	DIRA data response	as required	variable
167	GTACS	OATS	Sol	Trim Tab data response	as required	variable
176	GTACS	OATS	Sol	DIRA data completion	as required	4
177	GTACS	OATS	Sol	Trim Tab data completion	as required	4
185	GTACS	OATS	Sol	MMC Calibration data response	as required	variable
187	GTACS	OATS	Sol	SMC data response	as required	variable
188	GTACS	OATS	Sol	Thermal Snap data response	as required	variable
190	GTACS	OATS	Unsol	S/C Equipment Status	as required	84
195	GTACS	OATS	Sol	MMC Calibration data completion	as required	4
197	GTACS	OATS	Sol	SMC data completion	as required	4
198	GTACS	OATS	Sol	Thermal Snap data completion	as required	4
205	GTACS	OATS	Unsol	Single Chord Notification	as required	4
301	AGC	GTACS	Unsol	AGC Monitor Telemetry	12/min	27

Figure 4-7 is an N2 chart of all the messages exchanged between each pair of the SSGS elements. The diagonal of the matrix contains the SSGS elements. The rows of the matrix (reading horizontally) contain messages issued from the corresponding element. Reading the columns identifies the message destination element on the diagonal. OATS Message 45 is a special message between OATS workstations.

GTACS	151, 153, 154, 155, 159, 160, 162, 164, 165, 168, 170, 175, 180, 199, 202	113, 114, 115	110, 111, 112	123,129
51, 53, 54, 55, 56, 57, 59, 60, 62, 70, 71, 72, 73, 75, 80, 81, 82	OATS (45)		33	41, 42
13, 14, 15, 16		MRS&S		
1, 2, 10, 11, 12	1, 3		SPS	5, 6
23,27	20, 21, 22		25, 26	RPM

Figure 4-7. SSGS Message Exchange

All GIMTACS/GTACS message fields are filled with valid data even if the message is an invalid message response; for example, FATAL. GIMTACS must be able to byte-swap all messages. Byte swapping converts Gould data formats to DEC formats and DEC formats into Gould data formats. Byte swapping also obtains valid data for that field.

The message lengths listed in the table are the maximum lengths of the message body in 16-bit half-words (i.e., excluding the 16-bit half-word header). Where the length is listed as Var, refer to the specific message description for the length. For some variable length messages, using message header confirmation fields continues the message.

A standard date-time stamp is used in many communication messages. It has the following generic four half-word format:

HALF-WORD NO.	MSB 0	1	2	3	4	5	6	7	8	9	10	11	12	13	14	LSB 15
N	YEAR															
N+1	F	DAY OF YEAR											HR(10s)			
N+2	HR(1s)				MINUTES								SEC(10s)			
N+3	SEC(1s)				MSECS											

Where:

DATA ITEM	FORMAT	VALIDATION	UNITS
F (TIME CODE FLAG)	BINARY	0-LOCK 1-FLYWHEEL	N/A
YEAR	BCD	1989-2025	YEAR
DAY OF YEAR	BCD	1-366	DAY
HOUR	BCD	0-23	HOUR
MINUTES	BCD	0-59	MIN
SECONDS	BCD	0-59	SECS
MSECS	BCD	0-999	MSECS

The time code flag "F" is binary, located in the first bit (bit zero) of the second half-word. All other variables are BCD with the following word-bit relationship:

a. The first date-time stamp half-word contains YEAR in standard position order of thousandths, hundredths, tenths, and units (four bits each).

b. After the time code flag in the second half-word, DAY OF YEAR is in hundredths (three bits), tenths, and units order, starting in bit one through bit eleven.

c. HOUR begins in the least significant four bits of the second half-word with the tenths position. The unit's position is contained in the most significant four bits of the third half-word.

d. MINUTES are the eight middle bits (4-11) of the third half-word in tenths and units order.

e. SECONDS begins in the least significant four bits of the third half-word with the tenths position. The unit's position is contained in the most significant four bits of the fourth half-word.

f. Milliseconds (MSECS) takes the remaining twelve bits of the fourth half-word in standard hundredths, tenths, units order.

In general, when the counter within a message is zero, indicating that following data is absent, the data is not included in the message and the message terminates before the beginning of the message repeat section.

Additionally, all solicited responses to GIMTACS/GTACS echo the ROUTING ID, half-words 15 and 16, in the message header, obtained from the original GIMTACS/GTACS request message. This is similar to the echoing of the tracer field for incoming OATS messages.

A summary of message types and subtypes, origin and destination, nominal frequency, and message length is provided in Figure 4-8. The table has been updated to include messages for GIMTACS and SSGS. Not all messages are used for both SSGS and GIMTACS and differences will be noted. Although the message format has been retained for SSGS, messages are passed using a point-to-point socket protocol. Therefore, messages are sent to a specific receiving system, not broadcast as in the GOES I-M system.

Each message's data layout and block format is described in detail in Section 4.3.2 through 4.3.8. Each describes the messages originating from a specific system (i.e., SPS, PM, OATS). For messages with multiple subtypes, the subtype is indicated by the number after the dash; for example, Message 1-1 refers to Message 1, Subtype 1.

DATA BLOCK LAYOUT:

HALF-WORD NO.	MSB 0 1 2 3 4 5 6 7	8 9 10 11 12 13 14 LSB 15	
1	MESSAGE SEQUENCE NO.		HEADER
2	SATELLITE ID	SOURCE	
3 4	DESTINATION		
5 6	NUMBER OF 16-BIT HALF-WORDS		
7	MESSAGE TYPE (NUMBER)	MESSAGE SUBTYPE	
8 : 12	TRACER		
13	MESSAGE COUNT	END OF MESSAGE	
14	SPARE		
15 16	ROUTING ID		
17	DATA HALF-WORD 1		DATA BLOCK
:			
:	DATA HALF-WORD N		

Figure 4-8. Communication Message Format

Notes:

1. Message sequence number: 1–65535
2. Satellite ID

Satellite ID	S/C Reference
08	GOES-I, GOES-08
09	GOES-J, GOES-09
10	GOES-K, GOES-10
11	GOES-L, GOES-11
12	GOES-M, GOES-12
13	GOES-N, GOES-13
14	GOES-O, GOES-14
15	GOES-P, GOES-15

3. Source and Destination (plus location)

NODE ID	ELEMENT NODE NAME	LOCATION		NODE ID	ELEMENT NODE NAME	LOCATION
10	GIMTACS	*		56	SMRSS06	SOCC
11	RPM1	SOCC		57	SMRSS07	SOCC
12	RPM2	SOCC		58	CMRSS01	CDAS
13	RPM3	SOCC		59	CMRSS02	CDAS
14	RPM4	SOCC		60	CMRSS03	CDAS
15	RPM5	CDAS		61	CMRSS04	CDAS
16	RPM6	CDAS		62	CMRSS05	CDAS
17	RPM7	CDAS		63	GMRSS01	WBU
18	RPM8	WBU		64	FMRSS01	FCDAS
19	RPM9	FBK		65	BMRSS01	SWPC
20	SPS1	CDAS				
21	SPS2	CDAS		66	BMRSS02	SWPC
22	SPS3	CDAS		67	BMRSS03	SWPC
23	SPS4	CDAS		68	BMRSS04	SWPC
24	SPS5	CDAS		69	HMRSS01	BSS
25	SPS6	CDAS		70	HMRSS02	BSS
26	SPS7	FBK		75	SOAT11	SOCC
27	SPS8	WBU		76	SOAT12	SOCC
28	SPS9	CDAS		77	SOAT13	SOCC
29	RPM10	SOCC		78	SOAT14	SOCC
31	All SPSs	*		79	SOAT15	SOCC
32	All OATS	*		80	SOAT16	SOCC
33	All RPMs	*		81	SOAT17	SOCC
34	All MRS&S	*		82	COAT11	CDAS
41	I-M OATS 1	SOCC		83	COAT12	CDAS
42	I-M OATS 2	SOCC		84	COAT13	CDAS
43	I-M OATS 3	SOCC		85	GOAT11	WBU
44	I-M OATS 4	SOCC		90	SGTACS01	SOCC
45	I-M OATS 5	SOCC		91	SGTACS02	SOCC
46	I-M OATS 6	SOCC		92	SGTACS03	SOCC
47	I-M OATS 7	WCDA		93	SGTACS04	SOCC
48	I-M OATS 8	WCDA		94	SGTACS05	SOCC

NODE ID	ELEMENT NODE NAME	LOCATION		NODE ID	ELEMENT NODE NAME	LOCATION
49	I-M OATS 9	WCDA		95	CGTACS01	CDAS
50	I-M OATS 10	WBU		96	CGTACS02	CDAS
51	SMRSS01	SOCC		97	CGTACS03	CDAS
52	SMRSS02	SOCC		98	CGTACS04	CDAS
53	SMRSS03	SOCC		99	GGTACS01	WBU
54	SMRSS04	SOCC		100	BGTACS01	SWPC
55	SMRSS05	SOCC		101	FGTACS01	FCDAS

4. Number of data half-words: Number of 16-bit half-words in the data block of the current message.

5. Message type (number) and subtype (content): See Table 4-8.

6. Tracer: The tracer is a message-unique identifier included only with requests to GIMTACS/GTACS for telemetry and to the RPM for IMC quality checks data. This tracer is expected to be returned unaltered in the corresponding response message(s). The format of the tracer field is 10 ASCII characters beginning with a letter "T" and followed by nine numerals, i.e., Tnnnnnnnnn. One exception to this format is the message to terminate IMC quality check data, Message 42. For all other unsolicited incoming OATS messages, the tracer field should be all ASCII blanks.

7. Message count/end of message flag:

   In GIMTACS, while messages are sent using the TCP/IP protocol, the mechanism for receiving and sending messages was designed upon the X.25 protocol which limited packet size. Messages are broken into multiple pieces so as not to violate the packet size limitation, and reassembled by the receiver. Prior to going to the TCP/IP protocol, message count and the end of message flag allowed transmission of messages that exceeded the maximum allowable X.25 packet size, 1776 half-words of data plus 16 half-words of header. The message count, which ranges from 1 to 255, indicated the X.25 message number in the sequence. For example, if an application message required four X.25 messages to transmit an entire message, the packet count would range from one, for the first X.25 message, to four for the last. The end of message flag indicated the last packet in the sequence and is true when all bits, 8 – 15, are set to one. In all other X.25 packets in the sequence, the flag indicated a false condition by setting all bits to zero. If a message was within the X.25 message size limitation, the message count is set to one and the end of message flag is set.

   In GTACS, when used in combination, allows the receiver to handle messages which exceed the maximum allowable packet size (1776 half-words of data plus 16 half-words of header). The message count, which ranges from 1 to 255, indicates the message number in the sequence. For example, if an application message required four messages to transmit an entire message, the packet count would range from 1, for the first message, to 4 for the last. The end of message flag indicates the last packet in the sequence, and is true when all bits (bits 8–15) are set to one. In all other packets in the sequence, the flag indicates a false condition by setting all bits to zero. If a message is within the message size limitation, the message count is set to one and the end of message flag is set to true.

8. Routing ID:

   In GIMTACS, this is used for internal routing of solicited messages. The responder merely echoes the routing ID received in the request message. No unsolicited messages sent to GIMTACS require a specific routing ID; so in this case, the field is not used.

   In GTACS, the appropriate process controls the TCP/IP socket and receives the message directly from the external source; therefore, routing is not required. However, the Routing ID field is used internally by GOES N-P OATS.

Table 4-8. Communication Message List

Type	Message Description	Message Subtype	Comm Source	Dest	Mode	Nominal Freq.	No. of Half Words
1	Range Measurement	1 = Ground Path Delay 2 = Calib. Tower Delay 3 = Satellite Range	SPS	OATS	Unsol	2/day 4/year 2 or 4/ hour	22
2	Star Measurement	1 = Imager 2 = Sounder	SPS	GIM	Unsol	6/hour	296
				GTACS	Unsol	8-12 / hour	296
3	O&A Data Request	0	SPS	OATS	Unsol	As required	8
5	NLUT Data Request	1 = Imager 2 = Sounder	SPS	PM	Unsol	As required	8
6	CORT Data Request	1 = Imager	SPS	PM	Unsol	As required	8
10	SPS Health & Status	0	SPS	GIM, GTACS	Both	6/min	70
11	Wideband Telemetry	1 = Imager 2 = Sounder	SPS	GIM GTACS	Unsol	6/min	180
12	SPS Text Message	0	SPS	GIM	Unsol	As required	40
13	SXI Telemetry (GOES N-P)	AVS Telemetry 1 = AVS Telemetry 2 = AVS MSG Xmit Rate 3 = ADS Telemetry 4 = ADS MSG Xmit Rate	MRSS	GTACS	 Unsol Both Unsol Both	 60/min 6/min 60/min 6/min	 407 6 407 6
14	SXI Status (GOES N-P)	1	MRSS	GTACS	Sol	6/min As required	32
15	SXI Table Dump (GOES N-P)	APID(hex) Description 10 = Housekeeping 13 = Image Summary 14 = Data/Health Mon 15 = Sequence Data 20 = Observing Events 21 = Computer Events 31 = Memory Dump FE = PMC1 Telemetry FF = PMC2 Telemetry	MRSS	GTACS	Unsol	 15/min 1-6/min 1-6/min 1/min As required As required As required 58-59/min 58-59/min	 300 414 414 414 6 6 1776 262 262
16	SXI Error (GOES N-P)	SXI Data Msg Xmit Rate (for each subtype defined)	MRSS	GTACS	Both	6/min	6
20	Landmark Measurement	1 = Imager Visible 2 = Sounder Visible 3 = Imager IR	PM	OATS	Unsol	24/day 24/day As required	36
				N-OATS		10/hour/sc 10/hour/sc as required	
21	IMC Quality Check Response	1 = Imager 2 = Sounder	PM	OATS	Sol	1/day	834
				N-OATS		1+/request 1+/request	
22	IMC Qual Check Completion	0 = Success 1 = No Success 2 = Premature Completion 3 = Unable to fulfill	PM	OATS	Sol	2/day As required As required As required	4
				N-OATS		1/request	
23	PM Health & Status	0	PM	GIM GTACS	Unsol Sol	2/min As required	150
25	NLUT	1 = Imager 2 = Sounder	PM	SPS	Both	1/week	1040
26	Imager Co-registration Correction Message	1 = Imager	PM	SPS	Both	1/day	102

Type	Message Description	Message Subtype	Comm Source	Dest	Mode	Nominal Freq.	No. of Half Words
27	PM Text Message	0	PM	GIM	Unsol	As required	80
				GTACS			60
33	O&A Data Response	1 = Full Set 2 = New Orb Ref Set 3 = SSAA, Coupled Imager/Sounder 4 = SSAA, Uncoupled Imager/Sounder 5 = Post-SK Full Set 6 = SS O&A Adjust	OATS	SPS	Both	1/day As required As required As required 7/year As required	1230
		O&A Data Response: 1 = Full Set 2 = New Orbit Reference Set 3 = SSAA, Coupled Imager/Sounder 4 = SSAA, Uncoupled Imager/Sounder 5 = Post-SK Full Set 6 = Short Span Orbit & Attitude Adjust	N-OATS			1/IMC/sc As required As required As required As required As required	
41	IMC Quality Check Request	1 = Imager 2 = Sounder 3 = Both	OATS	PM	Unsol	1/day 1/day 2/year	6
			N-OATS			1/week 1/week 1/week	
42	Terminate IMC Qual Check	0	OATS	PM	Unsol	1/day	0
			N-OATS			As required	
45	OATS Inter-node Message	0	OATS	OATS	Unsol	As required	Var
51	Star View CMD Param Req	1 = Imager 2 = Sounder	OATS	GIM	Sol	6/day	Var
			N-OATS	GTACS		4/IMC 2/IMC	
53	IMC, SMC, or SCC Coefficient Data	1 = Full Set 2 = New Orbit Ref. Set 3 = SSAA, Coupled Imager/Sounder 4 = SSAA, Uncoupled Imager/Sounder 5 = Post-SK Full Set 6 = SSAA 101 = SMC Set 102 = SCC SET	OATS	GIM	Both	As required As required As required As required 7/day As required 1/day As required	1174 1174 1174 1174 1174 1174 Var 42
		IMC Coefficient Data: 1 = Full Set 2 = New Orbit Reference Set 3 = SSAA,Coupled Imager/Sounder 4 = SSAA, Uncoupled Imager/Sounder 5 = Post-SK Full Set 6 = Short Span Orbit & Attitude Adjust	N-OATS	GTACS	Sol	1/IMC/sc As required As required As required 7/year As required	1162

Type	Message Description	Message Subtype	Comm Source	Dest	Mode	Nominal Freq.	No. of Half Words
53-LUT	IMC, SMC, or SCC Coefficient Data LUT Format	1 = Full Set 2 = New Orbit Ref. Set 3 = SSAA, Coupled Imager/Sounder 4 = SSAA, Uncoupled Imager/Sounder 5 = Post-SK Full Set 6 = SSO&A Adjustment	OATS	GIM	Sol	As required	1072
54	OATS Status	1 = Response Requested 2 = Response	OATS N-OATS	GIM GTACS	Sol Unsol	As required 1/min	Var
55	Scan Frame Response	1 = Imager 2 = Sounder	OATS N-OATS	GIM GTACS	Sol	150/day 5/IMC/sc 5/IMC/sc	Var
56	SK CMD Parameters	1 = N-S Thruster 6/7 2 = E-W Thruster 2/3 3 = E-W Thruster 4/5	OATS	GIM	Unsol	1/year 3/year 3/year	Var
		SK CMD Data: 1 = NS Maneuver (N1/N4), or 2 = NS Maneuver (N2/N3) 3 = E-W Maneuver, Flushing, Open-loop (on-station) 4 = E-W Maneuver, Flushing (storage) 5 = N, Axial Thruster Flush (on-station) 6 = N, Axial Thruster Flush (storage) 7 = E-W Station Change, Closed-loop (on-station)	N-OATS	GTACS		1/year/sc 1/year/sc 3-4/year/sc 3-4/year/sc 2/year/sc 2/yr/sc As required	
57	Momentum Dump Command (GOES N-P)		N-OATS	GTACS	Unsol	1/day/sc	34
58	Trim Tab Command Params (GOES I-M)	0	OATS	GIM	Unsol	1/day/sc	12
59	Eclipse Predication Response	0	OATS N-OATS	GIM GTACS	Sol	1/day/sc	Var
60	Sensor Intrusion Response	0	OATS N-OATS	GIM GTACS	Sol	1/day/sc	Var
61	DIRA Drift Command (GOES I-M)	0	OATS	GIM	Unsol	7/year	6
62	IMC, SMC, or SCC Set Ready	1 = Normal Set 2 = Previous Set 101 = SMC Set 102 = SCC Set	OATS	GIM	Unsol	1+/day As required 1/day As required	14
		IMC Set Ready: 1 = Normal Set 2 = Post Housekeeping Set 3 = Eclipse Set 4 = Post Maneuver Set 5 = Post Yaw Flip Set 6 = Post Thruster Flushing Set 7 = Post Eclipse	N-OATS	GTACS	Both	1/day/sc 1/day/sc 1/day/sc (eclipse) 6/year/sc As required As required 1/day/sc (eclipse)	8

Type	Message Description	Message Subtype	Comm Source	Dest	Mode	Nominal Freq.	No. of Half Words
63	SSAA IMC Set Ready (GOES I-M)	3 = SSAA Coupled Imager/Sounder 4 = SSAA Uncoupled Imager/Sounder	OATS	GIM	Unsol	As required	42
66	DIRA Cal Data Request (GOES I-M)	1 = PID Request	OATS	GIM	Unsol	As required	Var
67	Trim Tab Data Request (GOES I-M)	1 = PID Request 2 = Thruster Data Req	OATS	GIM	Unsol	1/day	Var 8
70	Propulsion Subsys Data Req	1 = PID Request 2 = Thruster Data Req	OATS	GIM	Unsol	1/day	Var 8
		IMC Set Ready: 1 = Normal Set 2 = Post Housekeeping Set 3 = Eclipse Set 4 = Post Maneuver Set 5 = Post Yaw Flip Set 6 = Post Thruster Flushing Set 7 = Post Eclipse	N-OATS	GTACS	Both	1+/day/sc	
71	Star Window Request	1 = Normal Schedule 2 = Contingency Sched 3 = Normal Sched Return	OATS N-OATS	GIM GTACS	Unsol	As required	4
72	OATS Alarm Message	0	OATS N-OATS	GIM GTACS	Unsol	As required	40
73	Torque Table Updates (GOES N-P)		N-OATS	GTACS	Unsol	2/year/sc	76
75	IMC Scale Factor Calibration Schedule Response	1 = Imager 2 = Sounder	OATS	GIM	Sol	2/year/sc	Var
		IMCCAL Schedule Response: 1 = Imager 2 = Sounder	N-OATS	GTACS			
80	IMC Scale Factors	1 = Imager 2 = Sounder	OATS	GIM	Unsol	2/year/sc	4
81	MMC Scale Factors (GOES I-M)	0	OATS	GIM	Unsol	2/year/sc	18
		IMCCAL Scale Factors: 1 = Imager 2 = Sounder	N-OATS	GTACS			4
81	ISEC Scale Factors (GOES N-P)	IMCCAL Scale Factors: 1 = Imager 2 = Sounder	N-OATS	GTACS			4
82	OATS Response Error Text (GOES N-P)	Request Error Message	N-OATS	GTACS	Sol	As required	40
85	MMC Calibration Data Req (GOES I-M)	1 = PID Request	OATS	GIM	Unsol	2/year	Var
87	SMC Data Request (GOES I-M)	1 = PID Request	OATS	GIM	Unsol	As required	Var
88	Thermal Snap Data Request (GOES I-M)	1 = PID Request	OATS	GIM	Unsol	As required	Var

Type	Message Description	Message Subtype	Comm Source	Dest	Mode	Nominal Freq.	No. of Half Words
110	SPS Configuration Control	1 = Offline 2 = Online 3 = OPR 4 = Configuration 5 = IDLE 6 = Start 0&A 7 = Start Imager NLUT 8 = Start Sounder NLUT 9 = Start CORT	GIM GTACS	SPS	Unsol	As required	0 0 0 Var 0 8 8 8 8
111	SPS Status Request	0	GIM GTACS	SPS	Unsol	As required	0
112	GIMTACS/GTACS Text Message	0	GIM GTACS	SPS	Unsol	1/hour	Var
113	SXI Telemetry Data Rate Control	AVS Message Rate Cntrl 1 = AVS Rate 3 = ADS Rate	GTACS	MRSS	Unsol		2
114	SXI Status Request	MRS&S	GTACS	MRSS	Unsol	As required	0
115	SXI Table Dump Request	SXI Message Rate Control (for each subtype defined)	GTACS	MRSS		As required	2
123	PM Status Request	0	GIM GTACS	PM RPM	Unsol	As required	0
129	GTACS-RPM Text Message (GOES N-P)		GTACS	RPM	Unsol	As required	40
151	Star View CMD Param Req	1 = Imager 2 = Sounder	GIM GTACS	OATS N-OATS	Both Unsol	6/day 4/IMC/sc 2/IMC/sc	Var
153	IMC, SMC, or SCC Coefficient Request	1 = Normal Set 2 = Previous Set 101 = SMC Set 102 = SCC Set	GIM GTACS	OATS N-OATS	Unsol	1+/day As required As required As required 1/IMC/sc As required	8
154	OATS Health & Status Req	1 = Response Request 2 = Response	GIM GTACS	OATS N-OATS	Unsol	As required As required 1/min	Var 148
155	Scan Frame Request	1 = Imager 2 = Sounder	GIM GTACS	OATS N-OATS	Unsol	150/day 5/IMC/sc 5/IMC/sc	Var
159	Eclipse Prediction Request	0	GIM GTACS	OATS N-OATS	Unsol	1/day/sc	6
160	Sensor Intrusion Request	0	GIM GTACS	OATS N-OATS	Unsol	1/day/sc	6
162	IMC Set Request (GOES N-P)	1 = Normal Set 2 = Post Housekeeping Set 3 = Eclipse Set 4= Post Maneuver Set 5 = Post Yaw Flip Set 6 = Post Thruster Flushing Set 7 = Post Eclipse	GTACS	N-OATS	Unsol	1/day/sc 1/day/sc 1/day/sc (eclipse) 6/year/sc As required As required 1/day/sc (eclipse)	6

Type	Message Description	Message Subtype	Comm Source	Dest	Mode	Nominal Freq.	No. of Half Words
164	IMC, SMC, or SCC Set Enabled or Yaw Flip State	0 = IMC Set 101 = SMC Set 102 = SCC Set 103 = Yaw-Flip State	GIM GTACS	OATS N-OATS	Unsol	1+/day As required As required As required 1/IMC/sc	6
165	IMC/MMC Status Change	1 = Imager 2 = Sounder	GIM GTACS	OATS N-OATS	Unsol	As required 1/IMC/sc 1/IMC/sc	8
166	DIRA Data Response (GOES I-M)	7 = DIRA Data 8 = DIRA, DSS, & ES	GIM	OATS	Sol	7/year As required	Var
167	Trim Tab Data Response (GOES I-M)	1 = Tank Data 2 = Thruster Firing 4 = Trim Tab Position 5 = Mag Torquer 6 = Wheel Speeds 9 = Magnetometer	GIM	OATS	Sol	1/day	Var
168	Momentum Telemetry Responses (GOES N-P)		GTACS	N-OATS	Unsol	1/6 min/sc	118
170	Propulsion Data Response	1 = Tank Data 2 = Thruster Firing History 3 = SADA Data	GIM GTACS	OATS N-OATS	Sol	1/day 1+/request	Var
175	IMCCAL Scale Factor Calibration Schedule Request	1 = Imager 2 = Sounder	GIM GTACS	OATS N-OATS	Unsol	2/year/sc 2/year/sc	6
176	DIRA Data Completion (GOES I-M)	0 = Success 1 = Data Dropouts 2 = Premature Completion 3 = Unable to Fulfill 4 = Req Partially Filled	GIM	OATS	Sol	7/year As required As required As required As required	2
177	Trim Tab Data Completion (GOES I-M)	0 = Success 1 = Data Dropouts 2 = Premature Completion 3 = Unable to Fulfill 4 = Req Partially Filled	GIM	OATS	Sol	1/day As required As required As required As required	4
180	Propulsion Data Completion	0 = Success 1 = Data Dropouts 2 = Premature Completion 3 = Unable to Fulfill 4 = Req Partially Filled	GIM GTACS	OATS N-OATS	Sol	3/day As required As required As required As required 1/request	4
185	MMC Calibration Data Resp (GOES I-M)	6 = Wheel Speed 7 = DIRA Data	GIM	OATS	Sol	2/year	Var Var
187	SMC Data Response (GOES I-M)	10 = SMC Data	GIM	OATS	Sol	As required	Var
188	Thermal Snap Response (GOES I-M)	11 = Thermal Data	GIM	OATS	Sol	As required	Var
190	S/C Equipment Status (GOES I-M)	0	GIM	OATS	Unsol	As required	84
195	MMC Calibration Data Completion (GOES I-M)	0 = Success 1 = Data Dropouts 2 = Premature Completion 3 = Unable to Fulfill 4 = Req Partially Filled	GIM	OATS	Sol	4/year As required As required As required As required	2

Type	Message Description	Message Subtype	Comm Source	Dest	Mode	Nominal Freq.	No. of Half Words
197	SMC Data Completion (GOES I-M)	0 = Success 1 = Data Dropouts 2 = Premature Completion 3 = Unable to Fulfill 4 = Req Partially Filled	GIM	OATS	Sol	As required	2
198	Thermal Data Completion (GOES I-M)	0 = Success 1 = Data Dropouts 2 = Premature Completion 3 = Unable to Fulfill 4 = Req Partially Filled	GIM	OATS	Sol	As required	2
199	GTACS-OATS Text Message (GOES N-P)		GTAS	N-OATS	Unsol	As required	40
202	Labeled Star Measurement	1 = Imager Normal 2 = Sounder Normal 3 = Imager IMCCAL 4 = Sounder IMCCAL	GIM	OATS	Unsol	8/hour 6/hour As required As required	304
205	Single Chord Notification (GOES I-M)	1 = On 2 = Off	GIM	OATS	Unsol	As required	4
301	AGC Monitor Telemetry (GOES I-M)	0 = Rx Signal Strength	AGC	GIM	Unsol	12/Min	27

KEY TO ACRONYMS AND ABBREVIATIONS:
Freq. - Frequency IMC - Image Motion Compensation O&A - Orbit and Attitude SMC - Spacecraft Motion Compensation Sol - Solicited SSAA - Short Span Attitude Adjustment SCC - Single Chord Correction SSO&A - Short Span O&A Adjustment Unsol - Unsolicited Var - Variable

Notes:

1. An unsolicited message is defined as one without a precursor message, as a request. Unsolicited messages to GIMTACS/GTACS are sent to a generic host, while solicited messages are sent (returned) to the soliciting host. Internal routing of OATS, SPS, and PM solicited messages to GIMTACS/GTACS is handled by returning the routing ID in the response (see Figure 4-8).

2. The message lengths listed in the table are the maximum lengths of the message body in 16-bit half-words, excluding the 16-bit half-word header. Where the length is listed as Var, refer to the specific message description for the length. For some variable length messages, the message may be continued by using message header confirmation fields (see Section 4.3.2).

4.3.2.1 Message Store and Forward

Currently, SPSs and PMs store and forward messages in case of communication outages to the GIMTACS CCs, but GIMTACS, both the CCs and TCSs, does not have a store and forward capability. GOES Incident Report OPS-380E defines the store and forward capability described here. The GIMTACS CCs will perform a store and forward function on the messages shown in Table 4-9 when they cannot forward messages due to either a communication outage or a destination PM or SPS failure.

Table 4-9. GIMTACS to PM/SPS Store and Forward Messages

Origin	Destination	Type (Subtype)	Title	S&F Action
PM	OATS	20 (all)	Landmark Measurement	S&F all msgs
SPS	OATS	01 (all)	Range Measurement	S&F all msgs
SPS	TCS	02 (all)	Star Measurement	S&F all msgs
TCS	SPS	110 (6)	Start O&A	S&F last msg
TCS	SPS	110 (7)	Start Imager NLUT	S&F last msg
TCS	SPS	110 (8)	Start Sounder NLUT	S&F last msg
TCS	SPS	110 (9)	Start CORT	S&F last msg

GIMTACS TCSs will perform a store and forward function for the messages shown in Table 4-10 when they send OATS.

Table 4-10. GIMTACS to OATS Store and Forward Messages

Type (Subtype)	Title
164 (all)	IMC, SMC, or SCC Set Enabled
165 (all)	IMC Status Change
190 (all)	S/C Equipment Status
202 (all)	Labeled Star Message
205 (all)	Single Chord Notification

All store and forwarding is done First In First Out (FIFO) regardless of message type.

4.3.2.2 Coefficient Sets

Several Coefficient sets are generated by the OGE in support of INR. INR corrects for varying image motion over time caused by the orbital motion of the spacecraft and thermal effects on the spacecraft and its instruments. Corrections are determined on the ground by the OGE resulting in the coefficient sets that are then passed to GIMTACS/GTACS for uploading to the spacecraft's and Orbit Control Electronics (AOCE), which uses the coefficients to compensate for the effects of the disturbances.

4.3.2.2.1 IMC Set Identification

IMC, which is part of the original system design, corrects for the long-term thermal distortions of the spacecraft, Imager and Sounder instruments, and Earth Sensor, as well as spacecraft yaw and orbital deviations. Spacecraft range data (altitude) together with star and landmark observation data (angles) are used in the OGE OATS to determine spacecraft orbit and attitude. Using this information, OATS models long-term effects to compute IMC registration correction coefficients, which are passed to GIMTACS/GTACS for uploading to the spacecraft AOCE. The AOCE then computes an IMC analog signal that it applies to the Imager and Sounder drives to bias the mirrors in E-W and N-S directions, thus compensating for the effects of the disturbances.

A parent IMC set is generally effective during the entire image registration period. Due to various random natural phenomena or dynamic range limitations, the parent IMC set may be modified by small IMC subsets for varying subspans of the image registration period. The parent IMC set and its modifiers all have the same IMC epoch and all belong to a single IMC coefficients group.

The coefficient set is named *gnnn* where *g* is the group identification and *nnn* is the group sequence number. The group identification is an alphabetic character selected in order from A to Z, and the group sequence starts with 000 for the parent. For example, IMC identifiers G000 and J011 refer to the G group parent and the eleventh modifying set of the J group, respectively.

4.3.2.2.2 SMC Set Identification

In addition to the IMC signal sent to the Imager and Sounder, the on-board attitude and control processor has an alternate algorithm designed to correct for higher frequency spacecraft motion. The SMC was not part of the original design of the GOES spacecraft or the ground system, and was added as a reprogramming element for the GOES-8, 9, and 10 spacecraft. The GOES-11 and M spacecraft have the same logic incorporated into the onboard processors Programmable Read Only Memory (PROM). For all the spacecraft, the ground system has been modified to complement the spacecraft function by allowing for the collecting and processing of telemetry to derive coefficients for the uncompensated motion. Currently, the SMC is utilized to compensate for two attitude disturbance effects: 1) The periodic motion resulting from stray light striking the Earth sensors IR detectors, and 2) The thermal distortion of the spacecraft's solar sail. The Earth sensor-originated disturbance has been named the "bat-wing" effect, as its signature resembles a bat's wings. For both cases, the SMC coefficients are uploaded daily, during certain seasons of the year. The coefficient set is named *jjjx*, where *jjj* represents the Julian day and *x* denotes a Batwing effect with an 'A' or thermal snap with a 'B.'

4.3.2.2.3 SCC Set Identification

The GOES Earth sensor pointing is susceptible to thermal distortion within the sensor and external to the sensor (mounting). In addition, the Earth sensor's average chord length is very sensitive to the apparent Earth radius, which varies with orbital eccentricity. The combination of these error sources causes attitude errors, which can vary in magnitude dependent upon the time of day. When the Earth sensor is commanded to the single chord mode, these error sources are prevalent and have different characteristics than that of the normal sensor mode. The single chord mode is used at certain times when the Sun and/or Moon impinge on the Earth sensor scan FOV. During initial orbit checkout, these error sources are characterized as a Fourier series that is up-linked to the spacecraft. This feature is utilized through a reprogram patch algorithm to compensate for the errors while in single chord. The GOES-8, 9, and 10 spacecraft had the algorithm incorporated into reprogram and the GOES-11 and 12 spacecraft have the algorithm coded into the flight PROM. The SCC coefficients are generated and are up-linked to all spacecraft once each week. The coefficients are named *jjjC* where *jjj* identifies the Julian day of their creation.

4.3.3 SPS-Originated Messages

SPS originated messages are listed below in the order in which their detailed descriptions are provided in this section. Message Type and Subtype appear in the lower right hand corner of these pages to assist in easy identification of the pages describing a specific message.

Type	Description	Destination
1	Range Measurement	OATS
2	Star Measurement	GIMTACS/GTACS
3	O&A Data Request	OATS
5	NLUT Data Request	PM
6	CORT Data Request	PM
10	SPS Health & Status	GIMTACS/GTACS
11	Wideband Telemetry	GIMTACS/GTACS
12	SPS Text Message	GIMTACS/GTACS

Message 1 – Range Measurement (1 of 3)

The SPS performs ranging and sends range measurements to OATS, where the measurements are used in the O&A determination process. The range message provides OATS with a measurement of the one-way delay between the SPS and the spacecraft. Two calibration measurements are included in the message. The first is the ground path delay, which is the time delay associated with all of the ground equipment between the SPS and the receiving antenna. The second is the calibration tower delay, which is the time delay associated with the antenna feed and the spacecraft PDR transponder.

Each measurement consists of the antenna ID and supporting statistics, which include the number of samples, maximum and minimum range values, the RMS of the deviations, the standard deviation, the slope of the line, and the computed range. The Message 1 data block layout and field definitions follow.

```
HEADER BLOCK FIELDS:
       MESSAGE SEQUENCE NO.        = 1-65535
       SATELLITE ID                = 8,9,10,11,12,13,14,15 (I-P)
       SOURCE                      = 20,21,22,23,24,25,26,27,28 (SPS)
       DESTINATION                 = 32 (ALL OATS)
       NO. OF HALF-WORDS           = 22
       MESSAGE TYPE                = 1
       MESSAGE SUBTYPE             = 1 GROUND PATH DELAY
                                   = 2 CALIBRATION TOWER DELAY
                                   = 3 SATELLITE RANGE
       TRACER                      = ASCII BLANKS
       MESSAGE COUNT               = 1
       END OF MESSAGE              = 255
       ROUTING ID                  = N/A


DATA BLOCK LAYOUT:
 HALF-
 WORD NO. MSB                                          LSB
          0  1  2  3  4  5  6  7  8  9 10 11 12 13 14 15
         |-----------------------------------------------|_
      1  |                   YEAR                        | |
         |-----------------------------------------------| | CENTER
      2  |F|DAY OF YEAR                    |  HR (10s)   | | TIME OF
         |-----------------------------------------------| | RANGE
      3  |   HR (1s) |       MINUTES        |  SEC(10s)  | | MEASURE
         |-----------------------------------------------| | GROUP
      4  |   SEC(1s) |              MSECS                 | |
         |-----------------------------------------------|_
      5  |                  ANTENNA ID                   |
         |-----------------------------------------------|
      6  |              NUMBER OF SAMPLES                |
         |-----------------------------------------------|
      7  |              GROUND PATH DELAY                |
      8  |                                               |
         |-----------------------------------------------|
      9  |          CALIBRATION TOWER DELAY              |
     10  |                                               |
         |-----------------------------------------------|
     11  |                MAXIMUM VALUE                  |
     12  |                                               |
         |-----------------------------------------------|
     13  |                MINIMUM VALUE                  |
     14  |                                               |
         |-----------------------------------------------|
```

Message 1 – Range Measurement (2 of 3)

```
HALF-
WORD NO. MSB                                          LSB
         0  1  2  3  4  5  6  7  8  9 10 11 12 13 14 15
        |-----------------------------------------------|
    15  |                RMS OF DEVIATIONS              |
    16  |                 FROM CURVE FIT                |
        |-----------------------------------------------|
    17  |               STANDARD DEVIATION              |
    18  |                 FROM CURVE FIT                |
        |-----------------------------------------------|
    19  |                 SLOPE OF LINE                 |
    20  |                 FROM CURVE FIT                |
        |-----------------------------------------------|
    21  |                 COMPUTED RANGE                |
    22  |                                               |
        |-----------------------------------------------|
```

DATA ITEM	FORMAT	VALIDATION	UNITS
YEAR	BCD	1989-2025	YEAR
F (TIME CODE FLAG)	BINARY	0-LOCK 1-FLYWHEEL	N/A
DAY OF YEAR	BCD	1-366	DAY
HOUR	BCD	0-23	HOUR
MINUTES	BCD	0-59	MIN
SECONDS	BCD	0-59	SECS
MSECS	BCD	0-999	MSECS
ANTENNA ID	BINARY	1-8 (I-M)	N/A
	BINARY	1-10 (N-P) (See Notes)	N/A
NO. OF SAMPLES	BINARY	90-256	N/A
GROUND PATH DELAY	FLT.PT.	15000-20000	COUNTS
CALIB. TOWER DELAY	FLT.PT.	0.0-1000	COUNTS
MAX VALUE	FLT.PT.	1-7,500,000	COUNTS
MIN VALUE	FLT.PT.	1-7,500,000	COUNTS
RMS OF DEVIATIONS	FLT.PT.	0.0-100.0	COUNTS
STANDARD DEVIATION	FLT.PT.	0.0-100	COUNTS
SLOPE OF LINE	FLT.PT.	0.0-8340	DELTA COUNTS/SEC
COMPUTED RANGE	FLT.PT.	5,000,000-7,500,000	COUNTS

Notes:

1. All floating point values are in Gould single-precision format.

2. The Computed Range field contains ground path delay, calibration tower delay, or satellite range, as indicated by the message subtype. MIN, MAX, RMS, Standard Deviation, and Slope fields apply to the computed range.

3. Ground path delay contains the latest ground equipment delay measured by the SPS. If none is available, the field is null. When the ground path delay range measurement type is indicated, the ground path delay and computed range fields contain the same value.

4. Calibration tower delay contains the latest calibration tower measurement, which is the delay associated with the S/C transponder plus the antenna feed. If none is available, the field is null. When the calibration tower delay measurement type is indicated, the calibration tower delay and computed range fields contain the same value.

5. The satellite range is the latest one-way delay between the SPS and the S/C minus the sum of the latest ground path and calibration tower delays.

6. Each count is equal to 20 nanoseconds (ns).

Message 1 – Range Measurement (3 of 3)

7. Antenna IDs have a range from 1 to 10 as follows:

   GOES I-M:

   1 = 18 m/60 ft “A” antenna
   2 = 18 m/60 ft “B” antenna
   3 = 13 m/40 ft “C” antenna
   4 = 14 m/45 ft “G” tracking antenna
   5 = 16.4m/55 ft “J” antenna (hurricane rated)
   6 = 16.4m/55 ft “K” antenna (hurricane rated)
   7 = 16.4m/55 ft “L” antenna (hurricane rated) WBU
   8 = 21m/69ft antenna FCDA
   9 = unused

   GOES N-P:

   10 = unused

Message 2 – Star Measurement (1 of 3)

Star sense sequences occur an average of once every 30 minutes in groups of three or more on both the Imager and Sounder. The SPS extracts star sense data from the data stream, threshold-detects the data, and determines the center of peak amplitude time. The SPS then sends a star measurement message to GIMTACS/GTACS. The star measurement message contains instrument coordinates, duration, window threshold and mean value for detectors one through eight, number of detector one through eight events; and, four event records for each of the eight detectors. Each of the four event records contains the event mean value, duration of event, and the center time of the event. GIMTACS/GTACS adds the star ID and other star-view command data before forwarding the star measurement to OATS in a Message 202. The Message 2 data block layout and field definitions follow.

```
HEADER BLOCK FIELDS:
       MESSAGE SEQUENCE NO.            = 1-65535
       SATELLITE ID                    = 8,9,10,11,12,13,14,15 (I-P)
       SOURCE                          = 20,21,22,23,24,25,26,27,28 (SPS)
       DESTINATION                     = 10 (GIMTACS)
                                       = 90-101 (GTACS)
       NO. OF HALF-WORDS               = 296
       MESSAGE TYPE                    = 2
       MESSAGE SUBTYPE                 = 1 (IMAGER) OR 2 (SOUNDER)
       TRACER                          = ASCII BLANKS
       MESSAGE COUNT                   = 1
       END OF MESSAGE                  = 255
       ROUTING ID                      = N/A
```

```
DATA BLOCK LAYOUT:
 HALF-
 WORD NO. MSB                                          LSB
          0  1  2  3  4  5  6  7  8  9 10 11 12 13 14 15
         |-----------------------------------------------|_
      1  |                   YEAR                        | |
         |-----------------------------------------------| |
      2  |F|DAY OF YEAR                    |  HR (10s)   | |  STAR
         |-----------------------------------------------| |  SENSE
      3  |   HR (1s) |       MINUTES       |  SEC(10s)   | |  START
         |-----------------------------------------------| |  TIME
      4  |   SEC(1s) |             MSECS                 | |
         |-----------------------------------------------|_
    5-6  |             STAR SENSE DURATION               |
         |-----------------------------------------------|
      7  |      NO. OF RAW PIXELS PER INPUT SAMPLE       |
         |-----------------------------------------------|
      8  |    NO. OF INPUT SAMPLES PER AVERAGED SAMPLE   |
         |-----------------------------------------------|_
      9  |                 E-W CYCLES                    | |
         |-----------------------------------------------| |
     10  |               E-W INCREMENTS                  | |  INSTR
         |-----------------------------------------------| |  COORDS
     11  |                 N-S CYCLES                    | |
         |-----------------------------------------------| |
     12  |               N-S INCREMENTS                  | |
         |-----------------------------------------------|_
     13  |   WINDOW THRESHOLD LEVEL FOR DETECTORS 1-8    |
      .  |                                               |
     20  |                                               |
         |-----------------------------------------------|
```

Message 2 – Star Measurement (2 of 3)

```
HALF-
WORD NO. MSB                                          LSB
         0  1  2  3  4  5  6  7  8  9 10 11 12 13 14 15
        |---------------------------------------------|-
    21  |     DETECTOR MEAN VALUE FOR DETECTORS 1-8   |
     .  |                                             |
    28  |                                             |
        |---------------------------------------------|
    29  |        NO. OF EVENTS FOR DETECTORS 1-8      |
     .  |                                             |
    36  |                                             |
        |---------------------------------------------|
    37  |                   DATA LOSS                 |
        |---------------------------------------------|
    38  |                 YAW FLIP FLAG               |
        |---------------------------------------------|
  39-40 |                     SPARE                   |
        |---------------------------------------------|-
    41  |             EVENT MAXIMUM SIGNAL            | | EVENT
        |---------------------------------------------| | RECORD 1
    42  |             EVENT E-W SERVO ERROR           | |
        |---------------------------------------------| |
    43  |             EVENT N-S SERVO ERROR           | |
        |---------------------------------------------| |
    44  |        FULL WIDTH HALF MAXIMUM (FWHM)       | | DETECTOR
        |---------------------------------------------| | No.1
    45  |          CENTER TIME OF EVENT:  YEAR        | |
        |---------------------------------------------| |
    46  |F|         DAY OF YEAR            |  HR (10s) | |
        |---------------------------------------------| |
    47  |   HR (1s) |       MINUTES        |  SEC(10s) | |
        |---------------------------------------------| |
    48  |   SEC(1s) |             MSECS                 |
        |---------------------------------------------|-
    49  |       EVENT RECORDS 2-4 FOR DETECTOR 1      |
     .  |                                             |
    72  |                                             |
        |---------------------------------------------|
    73  |        EVENT RECORDS 1-4 FOR EACH OF        |
     .  |              DETECTORS 2-8                  |
   296  |                                             |
        |---------------------------------------------|
```

DATA ITEM	FORMAT	VALIDATION	UNITS
YEAR	BCD	1989-2025	YEAR
F (TIME CODE FLAG)	BINARY	0 - LOCK 1 - FLYWHEEL	N/A
DAY OF YEAR	BCD	1-366	DAY
HOUR	BCD	0-23	HOUR
MINUTES	BCD	0-59	MIN
SECONDS	BCD	0-59	SECS
MSECS	BCD	0-999	MSECS
STAR SENSE DURATION	BINARY	1000-64000	MSECS
RAW PIXELS/SAMPLE	BINARY	1-65535	N/A
SAMPLES/AVG SAMPLE	BINARY	1-65535	N/A
CYCLES	BINARY	0-128	CYCLES
INCREMENTS	BINARY	0-6135 (IMAGER) 0-2804 (SOUNDER)	INCREMENTS
WINDOW THRESHOLD	BINARY	0-65535 (IMAGER)	2^{-8} COUNTS
LEVEL		0-65535 (SOUNDER)	2^{-4} COUNTS
DETECTOR MEAN VALUE	BINARY	0-65535 (IMAGER) 0-65535 (SOUNDER)	2^{-8} COUNTS 2^{-4} COUNTS
NO. OF EVENTS	BINARY	0-4	N/A

Message 2 – Star Measurement (3 of 3)

DATA ITEM	FORMAT	VALIDATION	UNITS
DATA LOSS	BINARY	= 0 - NO LOSS DETECTED	N/A
		= 65,535 (ALL ONES)	
		= -- LOSS DETECTED	
YAW FLIP FLAG	BINARY	= X '00' - NORMAL	N/A
		= X '3F' - FLIPPED	
EVENT MAXIMUM SIGNAL	BINARY	= 0-65535 (IMAGER)	2^{-6} COUNTS
		= 0-65535 (SOUNDER)	2^{-3} COUNTS
SERVO ERROR	BINARY	0-1023 (IMAGER)	COUNTS
		0-8191 (SOUNDER)	
FWHM	BINARY	0-65535	MSECS

Notes:

1. Minimum star sense duration, quantified in the validation range of the Data Block, is equal to the minimum star sense duration which can be executed by the instruments (1 second for the Imager, 4 seconds for the Sounder). The maximum star sense duration assumes the maximum number of star sense blocks are summed (1024 blocks); and, the SPS buffer allocated for the storage of these samples is filled (6400 samples).

2. Raw Imager pixels are averaged in SPS hardware before being passed to SPS software. The number of raw pixels included in each of the input samples is given by half-word 7.

3. The input samples provided by the hardware are subject to a moving window averaging filter by the SPS software. The number of input samples enclosed by the window is denoted by half-word eight. The values produced by the window averaging filter are the super pixels upon which the star detection algorithm operates.

4. For a given detector, records are time-ordered from earliest CDA time, record 1, to latest CDA time, record 4. If no data is available for an event record, the record content is null (binary 0).

5. E-W and N-S servo error data are the values received by the SPS at the time of each star crossing event.

6. Data loss indicates either an Imager or Sounder data block synchronization loss or parity error that occurred during star sense data ingest, and the loss makes the star sense data validity suspect.

7. The yaw-flip flag is set to 0 for a spacecraft in its normal upright orientation and hex 3F when it is rotated 180° about the yaw axis.

Message 3 – O&A Data Request

The SPS sends OATS a Message 3 to request new O&A parameters for a specific O&A set identifier. The Message 3 data block layout and field definitions follow.

```
HEADER BLOCK FIELDS:
       MESSAGE SEQUENCE NO.                = 1-65535
       SATELLITE ID                        = 8,9,10,11,12,13,14,15 (I-P)
       SOURCE                              = 20,21,22,23,24,25,26,27,28 (SPS)
       DESTINATION                         = 32 (ALL OATS)
       NO. OF HALF-WORDS                   = 8
       MESSAGE TYPE                        = 3
       MESSAGE SUBTYPE                     = 0
       TRACER                              = ASCII BLANKS
       MESSAGE COUNT                       = 1
       END OF MESSAGE                      = 255
       ROUTING ID                          = N/A

DATA BLOCK LAYOUT:  N/A
      HALF-
      WORD NO. MSB                                          LSB
           0  1  2  3  4  5  6  7  8  9  10  11  12  13  14  15
          |-------------------------------------------------------|
        1 |                O&A SET IDENTIFIER                     |
        2 |-------------------------------------------------------|
        3 |                                                       |
        . |                      SPARE                            |
        . |                                                       |
        8 |-------------------------------------------------------|
```

DATA ITEM	FORMAT	VALIDATION	UNITS
O&A SET IDENTIFIER	ASCII	0000,ANNN A = A-Z NNN = 000-999	N/A

Notes:

1. This message is used only when an SPS is initially brought on line, or when the SPS needs a set that it currently does not have. The IMC set identifier is identical to the IMC set identifier received from GIMTACS/GTACS in Message 110-6. If the IMC is set to all zeroes, OATS sends the set currently in use by the satellite.

2. Normally, O&A sets are sent by OATS as unsolicited Message 33s.

3. Refer to Section 4.3.2.2.1 for a description of the IMC identifier.

Message 5 – NLUT Data Request

The SPS uses Message 5 to inform the PMs that it needs a new NLUT. Message 5 contains only the NLUT set identifier of the requested table. Message 5 data block layout and field definitions follow.

```
HEADER BLOCK FIELDS:
      MESSAGE SEQUENCE NO.          = 1-65535
      SATELLITE ID                  = 8,9,10,11,12,13,14,15 (I-P)
      SOURCE                        = 20,21,22,23,24,25,26,27,28 (SPS)
      DESTINATION                   = 33 (ALL PMs)
      NO. OF HALF-WORDS             = 8
      MESSAGE TYPE                  = 5
      MESSAGE SUBTYPE               = 1 - IMAGER
                                    = 2 - SOUNDER
      TRACER                        = ASCII BLANKS
      MESSAGE COUNT                 = 1
      END OF MESSAGE                = 255
      ROUTING ID                    = N/A

DATA BLOCK LAYOUT:
    HALF-
    WORD NO. MSB                                          LSB
            0  1  2  3  4  5  6  7  8  9 10 11 12 13 14 15
           |-----------------------------------------------|
       1   |                  NLUT SET                     |
       .   |                 IDENTIFIER                    |
       4   |                                               |
           |-----------------------------------------------|
       5   |                                               |
       .   |                   SPARE                       |
       8   |                                               |
           |-----------------------------------------------|
```

DATA ITEM	FORMAT	VALIDATION	UNITS
NLUT SET IDENTIFIER	ASCII	8-CHAR ASCII FREE-FORM TEXT	N/A

Notes:

1. This message is used only when an NLUT is initially brought on line, or when the SPS needs a set that it currently does not have. The NLUT set identifier is identical to the NLUT set identifiers received from GIMTACS/GTACS in Messages 110-7 and 110–8.

2. NLUTs are normally sent unsolicited by the PMs as Message 25s.

Message 6 – CORT Data Request

The SPS uses Message 6 to notify the PM that it needs a new Co-registration Table (CORT). Message 6 contains only the CORT identifier for the requested set of correction factors. The Message 6 data block layout and field definitions follow.

```
HEADER BLOCK FIELDS:
      MESSAGE SEQUENCE NO.          = 1-65535
      SATELLITE ID                  = 8,9,10,11,12,13,14,15 (I-P)
      SOURCE                        = 20,21,22,23,24,25,26,27,28 (SPS)
      DESTINATION                   = 33 (ALL PMs)
      NO. OF HALF-WORDS             = 8
      MESSAGE TYPE                  = 6
      MESSAGE SUBTYPE               = 1 - IMAGER
      TRACER                        = ASCII BLANKS
      MESSAGE COUNT                 = 1
      END OF MESSAGE                = 255
      ROUTING ID                    = N/A

DATA BLOCK LAYOUT:
    HALF-
    WORD NO. MSB                                        LSB
          0  1  2  3  4  5  6  7  8  9 10 11 12 13 14 15
         |---------------------------------------------|
      1  |                  CORT SET                   |
      .  |                 IDENTIFIER                  |
      2  |---------------------------------------------|
      3  |                                             |
      .  |                   SPARE                     |
      8  |---------------------------------------------|
```

DATA ITEM	FORMAT	VALIDATION	UNITS
CORT SET IDENTIFIER	ASCII	8-CHAR ASCII	N/A

Notes:

1. This message is used only when a CORT is initially brought on-line, or when the SPS needs a set that it currently does not have. The CORT set identifier is identical to the CORT set identifiers received from the GIMTACS/GTACS in Message 110-9.

2. The PMs normally send CORTs to the SPSs as unsolicited Message 26s.

Message 10 – SPS Health and Status (1 of 5)

The SPS sends GIMTACS and GTACS a Message 10 every 10 seconds. SPS also sends the status message in response to a GIMTACS/GTACS status request when in OPR or IDLE mode. The Message 10 data block layout and field definitions follow.

```
HEADER BLOCK FIELDS:
      MESSAGE SEQUENCE NO.          = 1-65535
      SATELLITE ID                  = 8,9,10,11,12,13,14,15 (I-P)
      SOURCE                        = 20,21,22,23,24,25,26,27,28 (SPS)
      DESTINATION                   = 10 (GIMTACS, GTACS)
      NO. OF HALF-WORDS             = 70
      MESSAGE TYPE                  = 10
      MESSAGE SUBTYPE               = 0
      TRACER                        = ASCII BLANKS
      MESSAGE COUNT                 = 1
      END OF MESSAGE                = 255
      ROUTING ID                    = RETURN ID RECEIVED WITH STATUS REQUEST
                                      (MESSAGE 111)

DATA BLOCK LAYOUT:
   HALF-
   WORD NO. MSB                                          LSB
          0  1  2  3  4  5  6  7  8  9 10 11 12 13 14 15
         |-----------------------------------------------|
      1  |                     YEAR                      |
         |-----------------------------------------------|
      2  |F|DAY OF YEAR                    | HR (10s)    |
         |-----------------------------------------------|
      3  |  HR (1s)  |       MINUTES       | SEC(10s)    |
         |-----------------------------------------------|
      4  |  SEC(1s)  |             MSECS                 |
         |-----------------------------------------------|
      5  |                 SPS STATUS                    |
         |-----------------------------------------------|
      6  | ULI INPUT CHANNEL    |  KERNEL ID      |RC|RS|
         |-----------------------------------------------|
      7  |                  ANTENNA ID                   |
         |-----------------------------------------------|
    8&9  |           CURRENT COMMANDED IMC ID            |
         |-----------------------------------------------|
     10  |         MESSAGE 11 INTERVAL - IMAGER          |
         |-----------------------------------------------|
     11  |         MESSAGE 11 INTERVAL - SOUNDER         |
         |-----------------------------------------------|
     12  |           CURRENT (IN USE) IMAGER             |
      .  |               NLUT IDENTIFIER                 |
     15  |                                               |
         |-----------------------------------------------|
```

Message 10 – SPS Health and Status (2 of 5)

HALF-WORD NO.	MSB 0 1 2 3 4 5 6 7 8 9 10 11 12 13 14 LSB 15	
16 17	INSTRUMENT STATUS	IMAGER
18	E-W CYCLES	
19	E-W INCREMENTS	
20	N-S CYCLES	
21	N-S INCREMENTS	
22	SCAN LINE NUMBER	
23	SCAN PIXEL NUMBER	
24	BIAS CALIBRATION MODE | SDI INPUT CHANNEL	
25 26	BIT ERROR RATE	
27	SYNC LOSS COUNT	
28 . 35	DETECTOR SUBSTITUTION ARRAY	
36&37	CURRENT IMC ID IN USE	
38 39	CORT ID	
40	CURRENT E-W CORT VALUE	
41	CURRENT N-S CORT VALUE	
42	SCAN CLAMP LIMB CLIPPING BOUNDARY	
43	GAIN 1 CAL MODE | GAIN 2 CAL MODE	
44 45 46	INSTR STATUS	SOUNDER
47	E-W INCREMENTS	
48	N-S CYCLES	
49	N-S INCREMENTS	
50	SCAN LINE NUMBER	
51	SCAN PIXEL NUMBER	
52	BIAS CALIBRATION MODE | SDI INPUT CHANNEL	
53 54	BIT ERROR RATE	
55	SYNC LOSS COUNT	
56&57	CURRENT IMC ID IN USE	
58	GAIN 1 CAL MODE | GAIN 2 CAL MODE	

Message 10 – SPS Health and Status (3 of 5)

```
 HALF-
 WORD NO. MSB                                          LSB
          0  1  2  3  4  5  6  7  8  9 10 11 12 13 14 15
         |-----------------------------------------------|
     59  |            CURRENT (IN USE) SOUNDER           |
      .  |                NLUT IDENTIFIER                |
     62  |                                               |
         |-----------------------------------------------|
     63  |                 INACTIVE IMAGER               |
      .  |                 NLUT IDENTIFIER               |
     66  |                                               |
         |-----------------------------------------------|
     67  |                INACTIVE SOUNDER               |
      .  |                 NLUT IDENTIFIER               |
     70  |                                               |
         |-----------------------------------------------|
```

DATA ITEM	FORMAT	VALIDATION	UNITS
YEAR	BCD	1989-2025	YEAR
F (TIME CODE FLAG)	BINARY	0 - LOCK	N/A
		1 - FLYWHEEL	
DAY OF YEAR	BCD	1-366	DAY
HOUR	BCD	0-23	HOUR
MINUTES	BCD	0-59	MIN
SECONDS	BCD	0-59	SECS
MSECS	BCD	0-999	MSECS
SPS STATUS	BINARY	(SEE NOTES)	N/A
ULI CHANNEL	BINARY	1-3	N/A
KERNEL ID	BINARY	0-63	N/A
RESAMPLING COMMANDED	BINARY	0 – Not Active	N/A
		1 – Active	N/A
RESAMPLING ACTIVE	BINARY	0 – Not Active	N/A
		1 – Active	N/A
ANTENNA ID	BINARY	1-8 (I-M)	N/A
	BINARY	1-10 (N-P)	N/A
		(See Notes)	
CURR. CMD IMC ID	ASCII	(SEE NOTES)	N/A
MESSAGE 11 INTERVAL	BINARY	1-10	SECS
INSTRUMENT STATUS	BINARY	(SEE NOTES)	N/A
CYCLES	BINARY	0-128	CYCLES
INCREMENTS	BINARY	0-6135 (IMAGER)	INCREMENTS
		0-2804 (SOUNDER)	
VISIBLE SCAN LINE NO.	BINARY	1-15787(IMAGER)	LINES
		1-1582 (SOUNDER)	
SCAN PIXEL NO.	BINARY	1-30680(IMAGER)	PIXELS
		1-1758 (SOUNDER)	
BIAS CALIBRATION MODE	BINARY	1 (IMAGER)	N/A
		1-2 (SOUNDER)	N/A
SDI INPUT CHANNEL	BINARY	1-4	N/A
BIT ERROR RATE	FLTPT	0-1 (SEE NOTES)	N/A
SYNC LOSS COUNT	BINARY	0-10 (SEE NOTES)	N/A
DETECTOR SUB ARRAY	BINARY	(SEE NOTES)	N/A
CORT ID	ASCII	(SEE NOTES FOR IMC ID)	N/A
CURR. E-W CORT VALUE	BINARY	-64 TO +64	PIXELS
CURR. N-S CORT VALUE	BINARY	-8 TO +8	PIXELS
SCAN CLAMP LIMB			
CLIPPING BOUNDARY	BINARY	0 TO 30	0.1 DEGREES
GAIN 1 CAL MODE	BINARY	1-7	N/A
GAIN 2 CAL MODE	BINARY	1-3	N/A
NLUT IDENTIFICATION	ASCII	NONE (SEE NOTES)	N/A

Message 10 – SPS Health and Status (4 of 5)

Notes:

1. SPS status bits are as follows:

Bit	Value	Meaning
0	1	SPS operate
1	1	SPS idle
2	1	SPS configuration
3	1	Auto-range
4	1	SPS range calibration
5	1	SPS start
6	1	SPS error
7	1	GIMTACS/GTACS on-line
	0	GIMTACS/GTACS off-line
8	1	Yaw-flip processing enabled
	0	Yaw-flip processing disabled
9–15		Unassigned

2. Instrument status bits are as follows:

Bit	Meaning – If Set
0	Spacelook in progress
1	ECAL in progress (N/A for Imager)
2	BB-Cal in progress
3	Normal frame active
4	Priority 1 frame active
5	Priority 2 frame active
6	Scan direction E-W, else W-E
7	Scan direction S-N, else N-S
8	IMC active, else inactive
9	Dwell mode = 4 (Sounder only)
	Clamp mode = 9.2 Space (Imager only)
10	Dwell mode = 2 (Sounder only)
	Clamp mode = 36.6 Space (Imager only)
11	Dwell mode = 1 (Sounder only)
	Clamp mode = scan clamp (Imager only)
12	N-S step mode = double (Sounder only)
	Co-registration enabled, else disabled (Imager only)
13	Side 2 active, else side 1
14	Star sense in progress
15	E-W correction enabled, else disabled
16	Relativization enabled, else disabled
17–25	Unassigned

Bit	Meaning - If Set
26	Operational mode = routine
27	Operational mode = rapid
28	Operational mode = super rapid
29	In sync, else sync loss condition
30	Visible normalization enabled, else disabled
31	IR calibration enabled, else disabled

Message 10 – SPS Health and Status (5 of 5)

3. For GOES I-N, the 16 bytes set aside for Imager detector substitutions correspond to eight visible detectors, seven IR detectors, and one spare byte. For GOES-O and beyond, the 16 bytes set aside for Imager detector substitutions correspond to eight visible detectors and eight IR detectors. Each byte contains a detector number indicating which detector is the data source for the corresponding substituted detector, or zero if no substitution is currently active for the corresponding detector. Substitutions are only made within a channel. For example, detector substitution byte 9 containing a value of 10 substitutes IR channel 2 detector 2 for IR channel 2 detector 1.

   The bytes and detector numbers are assigned as follows:

Byte or Detector No.	Detector	S/C 12 -13
1–8	Visible 1–8	Visible 1–8
9	IR channel 2, Detector 1	IR channel 2, Detector 1
10	IR channel 2, Detector 2	IR channel 2, Detector 2
11	IR channel 3	IR channel 3, Detector 1
12	IR channel 4, Detector 1	IR channel 3, Detector 2
13	IR channel 4, Detector 2	IR channel 4, Detector 1
14	IR channel 5, Detector 1	IR channel 4, Detector 2
15	IR channel 5, Detector 2	IR channel 6, Detector 1
16	Spare–not used	Spare–not used

Byte or Detector No.	S/C 14 and beyond
1–8	Visible 1–8
9	IR channel 2, Detector 1
10	IR channel 2, Detector 2
11	IR channel 3, Detector 1
12	IR channel 3, Detector 2
13	IR channel 4, Detector 1
14	IR channel 4, Detector 2
15	IR channel 6, Detector 1
16	IR channel 6, Detector 2

4. IMC ID Validation – first four characters are ASCII; first character (A through Z); next three (000–999).
5. The currently commanded IMC ID, if not already in use, is implemented at the start of the next Imager or Sounder frame. The current IMC ID in use for the Imager or Sounder remains in use for the duration of the current Imager or Sounder frame.
6. BER (Bit Error Rate) is nominally computed over 500 Sounder turnaround blocks and five Imager turnaround sequences.
7. Sync loss count is accumulated since the last status report, nominally 10 seconds.
8. The SPS has two NLUTs in memory for each instrument. One is the current NLUT in use and, the other is referred to as the inactive NLUT. The NLUT assignments change under the following conditions:
   a. Whenever the RPM sends an NLUT to the SPS, the received NLUT is placed in the inactive slot.
   b. When the SPS command USE NLUT is issued, the current and inactive NLUT's are switched.
   c. When GIMTACS/GTACS commands the SPS to start an inactive NLUT, the SPS switches the current and inactive NLUT assignments.
   d. When GIMTACS/GTACS commands the SPS to start an NLUT that is not the inactive NLUT, the SPS requests the commanded NLUT from the RPM. When the SPS receives the NLUT, it places it into the inactive slot and then switches the current and inactive NLUT assignments.
9. Resampling Active/Inactive should be primarily controlled by the SPS operator regardless of GIMTACS being OFFLINE / ONLINE. A Kernel suite is a complete set of kernels for all channels. Each suite will be identified by a unique ID. The suite ID will also be inserted in the GVAR and serve as the index into the database for the GSU to obtain the proper kernel tables.

Message 11 – Wideband Telemetry (1 of 6)

The SPS sends GIMTACS/GTACS selected wideband telemetry data extracted from the Imager and Sounder data streams every 2 to 10 seconds, as long as valid telemetry is being processed in the SPS. The Message 11 interval is controlled by the SPS operator or by the SPS configuration command in Message 110-4. The telemetry message contains the latest values extracted from the Imager turnaround sequence telemetry blocks and the Sounder data block. Table 4-11 and Table 4-12 contain the Imager and Sounder telemetry lists, respectively. The ordering of the telemetry data points in the tables matches that of the wideband data formats. The Message 11 data block layout and field definitions follow.

```
HEADER BLOCK FIELDS:
      MESSAGE SEQUENCE NO.          = 1-65535
      SATELLITE ID                  = 8,9,10,11,12,13,14,15 (I-P)
      SOURCE                        = 20,21,22,23,24,25,26,27,28(SPS)
      DESTINATION                   = 10 (GIMTACS)
                                    = 90-101 (GTACS)
      NO. OF HALF-WORDS             = 180
      MESSAGE TYPE                  = 11
      MESSAGE SUBTYPE               = 1 - IMAGER
                                    = 2 - SOUNDER
      TRACER                        = ASCII BLANKS
      MESSAGE COUNT                 = 1
      END OF MESSAGE                = 255
      ROUTING ID                    = N/A

DATA BLOCK LAYOUT:
 HALF-
 WORD NO. MSB                                          LSB
          0  1  2  3  4  5  6  7  8  9 10 11 12 13 14 15
         |---------------------------------------------|
      1  |                     YEAR                    |
         |---------------------------------------------|
      2  |F|DAY OF YEAR                    |  HR (10s) |
         |---------------------------------------------|
      3  |   HR (1s) |       MINUTES        |  SEC(10s) |
         |---------------------------------------------|
      4  |   SEC(1s) |             MSECS                |
         |---------------------------------------------|
      5  |               IMAGER OR SOUNDER             |
      .  |                  TELEMETRY                  |
    180  |                                             |
         |---------------------------------------------|
```

DATA ITEM	FORMAT	VALIDATION	UNITS
YEAR	BCD	1989-2025	YEAR
F (TIME CODE FLAG)	BINARY	0 - LOCK 1 - FLYWHEEL	N/A
DAY OF YEAR	BCD	1-366	DAY
HOUR	BCD	0-23	HOUR
MINUTES	BCD	0-59	MIN
SECONDS	BCD	0-59	SECS
MSECS	BCD	0-999	MSECS
TELEMETRY	BINARY	(SEE NOTES)	(SEE NOTES)

Message 11 – Wideband Telemetry (2 of 6)

Notes:

1. Imager telemetry and command echo data is in exactly the same format and units as received in the downlinked data stream. Listed in Table 4-11, these data items are each 10 bits wide, right-adjusted, and zero-filled within the 16-bit, half-word format of the message. The format and content of these words are specified in reference document SJ-572022.

2. The command echo data included in the Imager message, half-words 83 – 126, are extracted from the first four telemetry data blocks following a trailer data block in a turnaround sequence as follows:

   Data words:

83–93:	Command Echo Register 1
94–104:	Command Echo Register 2
105–115:	Command Echo Register 3
116–126:	Command Echo Register 4

3. Sounder telemetry data items are listed in Table 4-12. Each of these entries is 13-bits wide, right-adjusted, and zero-filled within the 16-bit, half-word size of the message. The most significant bit of each data half-word in the message is a good or bad parity indicator. If the bit is set to one, the parity of the originating raw data word was bad, and the value should be ignored. The most significant bit of the 13 data bits in each message half-word is the sign bit of the originating raw data block half-word. This bit only has meaning for the analog parameters reported in the message. The nature and content of each raw data word is defined in reference document SJ-572022.

4. The command echo data included in the Sounder telemetry message list, half-words 135 – 178, are extracted from the four most recent Sounder data blocks received by the SPS for which the raw data word parity was marked as valid. Note that the Sounder command echo words are packed by the instrument into the scan control words (15-25) of the raw Sounder data block. The format of these words is provided in Figure 3-8 of reference document SJ-572022. The SPS tracks the command echo words received and packs them into the message as follows:

   Data half-words:

135–145:	Command Echo Register 1
146–156:	Command Echo Register 2
157–167:	Command Echo Register 3
168–178:	Command Echo Register 4

Message 11 – Wideband Telemetry (3 of 6)

Table 4-11. Imager Telemetry List

Half Word Number	Description
5	E-W scan servo error
6	N-S scan servo error
7	E-W scan compensation
8	N-S scan compensation
9	Servo +25V
10	E-W scan servo current
11	Electronic +8V3
12	TLM -8V
13	Electronics temperature No. 1
14	Visible optics temperature
15–18	BB target temperature No. 1 – No. 4
19–20	Sensor assembly baseplate temperature No. 2, No. 5
21	Instrument current
22	Electronic side -17V
23	Electronic side +17V
24	N-S scan servo current
25	Servo side -8V
26	Servo side +8V
27	TLM side +11V
28	TLM side +17V
29	Telescope primary temperature
30	Louver radiator temperature
31–34	BB target temperature No. 5 – No. 8
35–36	Sensor assy baseplate temperature No. 1, No. 4
37	Electronics temperature No. 2
38	Telescope secondary temperature No. 1
39	Power supply temperature
40	Scan mirror temperature
41	Servo side -25V
42	Electronic side +8V2
43–44	Sensor assembly baseplate temperature No. 3, No. 6
45–53	Ref voltage +10V No. 1 – No. 9
54	Wide range IR detector temperature
55	Narrow range IR detector temperature
56	Cooler housing temperature
57	Cooler radiator temperature
58–63	Thermal baseplate control current No. 1 – No. 6
64	Signal ground
65	Heater bus voltage
66	Patch control voltage
67	TLM common +40V
68	Electronic cal voltage
69	Electronic side +8V1
70	Electronic side +12V
71	Servo side +7V1
72	Servo side +7V2

Message 11 – Wideband Telemetry (4 of 6)

Half Word Number	Description
73	Electronic side -8V
74–76	Spares – not used
77	Telescope secondary temperature No. 2
78	Primary baffle temperature No. 1
79	Primary baffle temperature No. 2
80	Spare temperature No. 4
81–82	Bi-level telemetry, half-word No. 1 and No. 2
83–126	Command echo
127	*E-W cycles
128	*E-W increments
129	*N-S cycles
130	*N-S increments
131–180	Spares – not used

Notes:

* Instrument positions, cycles or increments, are not included in wideband telemetry. The values in half-words 127 through 130 are those reported in the trailer data block preceding the wideband telemetry data blocks.

Table 4-12. Sounder Telemetry List

Half Word Number	Description
5	E-W scan servo current No. 1
6-7	Command status and bi-level telemetry
8	Instrument ID, flywheel sync
9	E-W scan position (high byte)
10	E-W scan position (low byte)
11	N-S scan position (high byte)
12	N-S scan position (low byte)
13	Time since previous spacelook
14	Time since previous BB-Cal
15-25	Spares – not used
26-29	E-W scan servo error No. 1 – No. 4
30	Spare – not used
31	N-S scan servo current
32-33	Thermal Control current No. 1 and No. 2
34-35	Filter wheel motor current No. 1 and No. 2
36	Instrument current
37	E-W scan servo error No. 5
38	Filter wheel period monitor
39	Electronic side +17V1
40	Electronic side +8V1

Message 11 – Wideband Telemetry (5 of 6)

Half Word Number	Description
41	Electronic side +8V2
42	Electronic side -17V
43	Electronic side -8V
44	Electronic side +12V
45	Electronic side +8V3
46	Filter wheel +18V No. 1
47	Filter wheel +18V No. 2
48	E-W scan servo error No. 6
49	Servo side +25V
50	Servo side +7V1
51	Servo side +7V2
52	Servo side +8V
53	Servo side -25V
54	Servo side -8V
55	TLM side +11V
56-57	Spares – not used
58	TLM side +17V
59	TLM common +40V
60	TLM side -8V
61-62	Spares – not used
63	Signal ground
64	Heater bus voltage
65	Visible optics temperature
66-71	BB target temperature No. 1 – No. 6
72	Spare – not used
73	E-W scan servo error No. 7
74-75	BB target temperature No. 7 – No. 8
76	Cooler housing temperature
77	Cooler radiator temperature
78-79	Electronics temperature No. 1 – No. 2
80	Filter wheel housing temperature
81	Filter wheel motor temperature
82	E-W scan servo current No. 2
83	Spare – not used
84	Filter wheel radiator temperature
85	Louver radiator temperature
86	Narrow range IR detector temperature

Message 11 – Wideband Telemetry (6 of 6)

Half Word Number	Description
87	Power supply temperature
88	Scan mirror temperature
89	Sensor assembly baseplate temperature No. 1
90-92	Spares – not used
93–95	Sensor assembly baseplate temperature No. 2 – No. 4
96	Spare – not used
97	E-W scan servo error No. 8
98–99	Sensor assembly baseplate No. 5 – No. 6
100	Telescope primary temperature
101	Telescope secondary temperature No. 1
102	Wide-range IR detector temperature
103	E-W scan compensation
104	Blank
105	Electronic cal voltage No. 1
106	Filter wheel control HTR voltage
107	N-S scan compensation
108	N-S scan servo error
109	Patch control voltage
110	Reference voltage +10V No. 1
111	Thermal control current No. 3
112	Thermal control current No. 4
113	Thermal control current No. 5
114	Thermal control current No. 6
115–116	Spares – not used
117	Telescope secondary temperature No. 2
118	Primary baffle temperature No. 1
119	Primary baffle temperature No. 2
120–123	Spares – not used
124–134	Attitude & Orbit Control Subsystem Electronics (AOCE) words No. 1 – No. 11
135–145	Command echo 1
146–156	Command echo 2
157–167	Command echo 3
168–178	Command echo 4
179–180	Spares – not used

Message 12 – SPS Text or Alarm Message

The SPS transmits messages to the GIMTACS operator not more often than once per second. Possible messages include responses to GIMTACS commands and data transmission errors or information concerning O&A sets. A text message consists of 51 ASCII characters, including a two-character alarm code. The Message 12 data block layout and specific character formats follow.

```
HEADER BLOCK FIELDS:
      MESSAGE SEQUENCE NO.          = 1-65535
      SATELLITE ID                  = 8,9,10,11,12(I-M)
      SOURCE                        = 20,21,22,23,24,25,26,27,28(SPS)
      DESTINATION                   = 10 (GIMTACS)
      NO. OF HALF-WORDS             = 40
      MESSAGE TYPE                  = 12
      MESSAGE SUBTYPE               = 0
      TRACER                        = ASCII BLANKS
      MESSAGE COUNT                 = 1
      END OF MESSAGE                = 255
      ROUTING ID                    = N/A

DATA BLOCK LAYOUT:
  HALF-
  WORD NO. MSB                                                  LSB
           | 0  1  2  3  4  5  6  7  8  9  10  11  12  13  14  15 |
           |-------------------------------------------------------|
     1     |                                                       |
     .     |                    TEXT MESSAGE                       |
    40     |                                                       |
           |-------------------------------------------------------|
```

DATA ITEM	FORMAT	VALIDATION	UNITS
TEXT MESSAGE	ASCII	N/A	N/A

```
TEXT MESSAGE FORMAT
1. Time (characters 1 through 15) formatted as
   DDD Sp  HH:MM:SS Sp Sp Sp (Sp = space or blank)

2. Test and alarm status field (character 16-66) defined as
   !  = normal status (character 16)
   !! = alarm status (character 17)
   In absence of an alarm, text starts from character 17.

3. Current scan and error code fields (characters 67-78) formatted as
   SCAN/AAA### where:
   SCAN  =  the current scan number (4 characters wide).  If the scan field is
            not included, spaces are substituted.
   AAA### = error code number.  The first three should identify the process from
            which the message originates, and the last three are, by convention,
            digits.  Example: SDX336
```

Notes:

Eight-bit ASCII character pairs are formatted into half-words by placing the first character in the MSB, bits 0 – 7, and the second character in the LSB, bits 8 – 15.

4.3.4 MRS&S-Originated Messages

MRS&S originated messages are listed below in the order in which their detailed descriptions are provided in this section. Message Type and Subtype appear in the lower right hand corner of these pages to assist in easy identification of the pages describing a specific message.

Type	Description	Destination
13-1	AVS Telemetry	GTACS
13-2	AVS Telemetry Status	GTACS
13-3	ADS Telemetry	GTACS
13-4	ADS Telemetry Status	GTACS
14-1	MRSS Status	GTACS
15-10	SXI Housekeeping	GTACS
15-13	SXI Image Summary	GTACS
15-20	SXI Observing Events	GTACS
15-21	SXI Computer Events	GTACS
15-31	SXI Memory Dump	GTACS
15-FE	PCM1 Telemetry	GTACS
15-FF	PCM2 Telemetry	GTACS
16-10	SXI Housekeeping (non-critical)	GTACS
16-13	SXI Image Summary (non-critical)	GTACS
16-20	SXI Observing Events (non-critical)	GTACS
16-21	SXI Computer Events (non-critical)	GTACS
16-31	SXI Memory Dump (non-critical)	GTACS
16-FE	PCM1 Telemetry (non-critical)	GTACS
16-FF	PCM2 Telemetry (non-critical)	GTACS

Message 13-1 & -3 – AVS/ADS Telemetry (GOES N-P Only) (1 of 2)

MRS&S uses message Type 13, Subtype 1 to pass AVS Telemetry and Subtype 2 to pass AVS Telemetry status. MRS&S uses message Type 13, Subtype 3 to pass ADS Telemetry and Subtype 4 to pass ADS Telemetry status. The latest received values of AVS or ADS telemetry are sent to GTACS at a rate commanded by GTACS using Message 113 of between six and sixty messages per minute. The status messages are sent to GTACS at a rate of six messages per minute. The following pages contain a description of Message 13's block layout and field definitions.

```
HEADER BLOCK FIELDS:
      MESSAGE SEQUENCE #            = 1-65535
      SATELLITE ID                  = 13,14,15 (N-P)
      SOURCE                        = 51 - 65 (MRS&S)
      DESTINATION                   = 10 (All GTACS)
      # OF DATA HALF-WORDS          = 811
      DATA TYPE                     = 13
      DATA SUBTYPE                  = 1 (AVS TELEMETRY)
                                    = 3 (ADS TELEMETRY)
      TRACER                        = ASCII BLANKS
      MESSAGE COUNT                 = 1-12
      END OF MESSAGE                = 0 for 1-11
                                    = 255 for 12
      ROUTING ID                    = N/A
```

DATA BLOCK LAYOUT:

HALF-WORD NO.	MSB 0	1	2	3	4	5	6	7	8	9	10	11	12	13	14	LSB 15
1	YEAR															
2	F	DAY OF YEAR											HR(10s)			
3	HR(1s)				MINUTES								SEC(10s)			
4	SEC(1s)				MSECS											
5	ZERO FILL									Ms	Us	Qs	Mi	Ui	Qi	D
6	FILL			U	SXI AVS/ADS X-AXIS DATA SAMPLE 001											
7	FILL			U	SXI AVS/ADS Y-AXIS DATA SAMPLE 001											
8	FILL			U	SXI AVS/ADS Z-AXIS DATA SAMPLE 001											
9	FILL			U	IMAGER AVS/ADS X-AXIS DATA SAMPLE 001											
10	FILL			U	IMAGER AVS/ADS Y-AXIS DATA SAMPLE 001											
11	FILL			U	IMAGER AVS/ADS Z-AXIS DATA SAMPLE 001											
:	:															
805	FILL			U	SXI AVS/ADS X-AXIS DATA SAMPLE 134											
806	FILL			U	SXI AVS/ADS Y-AXIS DATA SAMPLE 134											

Message 13-1 & -3 – AVS/ADS Telemetry (GOES N-P Only) (2 of 2)

HALF-WORD NO.	MSB 0 1 2 3	4 5 6 7	8 9 10 11	12 13 14 LSB 15
807	FILL	U	SXI AVS/ADS Z-AXIS DATA SAMPLE 134	
808	FILL	U	IMAGER AVS/ADS X-AXIS DATA SAMPLE 134	
809	FILL	U	IMAGER AVS/ADS Y-AXIS DATA SAMPLE 134	
810	FILL	U	IMAGER AVS/ADS Z-AXIS DATA SAMPLE 134	
811	SPARE			

DATA ITEM	FORMAT	VALIDATION	UNITS
YEAR	BCD	2000-2025	YEAR
F (TIME CODE FLAG)	BINARY	0 = LOCK 1 = FLYWHEEL	N/A
DOY (DAY OF YEAR)	BCD	1-366	DAY
HOUR	BCD	0-23	HOUR
MIN	BCD	0-59	MINUTES
SEC	BCD	0-59	SECONDS
MSEC	BCD	0-999	MSECS
ZERO FILL	BINARY	000000000	N/A
Ms (SXI MODE FLAG)	BINARY	0 = LO RANGE 1 = HI RANGE	N/A
Us (SXI MODE UPDATE)	BINARY	0 = NO UPDATE 1 = UPDATE	N/A
Qs (SXI MODE QUALITY)	BINARY	0 = CHKSUM BAD 1 = CHKSUM OKAY	N/A
Mi (IMAGER MODE FLAG)	BINARY	0 = LO RANGE 1 = HI RANGE	N/A
Ui (IMGR MODE UPDATE)	BINARY	0 = NO UPDATE 1 = UPDATE	N/A
Qi (IMGR MODE QUALITY)	BINARY	0 = CHKSUM BAD 1 = CHKSUM OKAY	N/A
D (DATA FLAG)	BINARY	0 = NO DATA 1 = DATA	N/A
FILL	BINARY	000	N/A
U (SAMPLE UPDATE FLAG)	BINARY	0 = NO UPDATE 1 = UPDATE	N/A
AVS/ADS SAMPLES	12 BITS	0 - 4095	AVS: raw angular rate counts. ADS: integrated angle. Scale depends on value of Mi or Ms
SPARE	I*2	0	N/A

Notes:

The time tag for this message reflects the time for the first group of AVS or ADS samples in the message (the six axial samples). All subsequent samples in the message have time tags found as follows:

sample time tag = message time tag + (sample – 1)*1.25 msec

If the update flag is not set for a sample, then it has not been updated since the last message was sent, so its time tag should not be updated (i.e., the message data for that sample is stale). Stale data within a message may result from loss of frame sync on the input MDL stream, leaving gaps in the updated AVS or ADS samples.

Message 13-2 & -4 – AVS/ADS Telemetry Status (GOES N-P Only)

```
HEADER BLOCK FIELDS:
      MESSAGE SEQUENCE #            = 1-65535
      SATELLITE ID                  = 13,14,15 (N-P)
      SOURCE                        = 51 - 65 (MRS&S)
      DESTINATION                   = 10 (All GTACS)
      # OF DATA HALF-WORDS          = 6
      DATA TYPE                     = 13
      DATA SUBTYPE                  = 2 (AVS TELEMETRY STATUS)
      DATA SUBTYPE                  = 4 (ADS TELEMETRY STATUS)
      TRACER                        = ASCII BLANKS
      MESSAGE COUNT                 = 1
      END OF MESSAGE                = 255
      ROUTING ID                    = N/A
```

DATA BLOCK LAYOUT:

HALF-WORD NO.	MSB 0	1	2	3	4	5	6	7	8	9	10	11	12	13	14	LSB 15
1	YEAR															
2	F	DAY OF YEAR											HR(10s)			
3	HR(1s)				MINUTES								SEC(10s)			
4	SEC(1s)				MSECS											
5	AVS/ADS TELEMETRY MESSAGE INTERVAL															
6	SPARE															

DATA ITEM	FORMAT	VALIDATION	UNITS
YEAR	BCD	2000-2025	YEAR
F (TIME CODE FLAG)	BINARY	0 = LOCK 1 = FLYWHEEL	N/A
DOY (DAY OF YEAR)	BCD	1-366	DAY
HOUR	BCD	0-23	HOUR
MIN	BCD	0-59	MINUTE
SEC	BCD	0-59	SECOND
MSEC	BCD	0-999	MSEC
AVS/ADS MSG INTERVAL	I*2	0 - 10	SECONDS
SPARE	I*2	0	N/A

Notes:

AVS/ADS Telemetry Message Interval indicates the currently selected time between issuing AVS or ADS Telemetry Messages (Type 13/1 and 13/3).

Message 14-1 – MRS&S Status (GOES N-P Only) (1 of 4)

MRS&S Status is provided in Message 14, Subtype 1. The status message is sent to GTACS periodically and in response to a Status Request Message (Message 114). The following contains a description of Message 14's block layout and field definitions.

```
HEADER BLOCK FIELDS:
      MESSAGE SEQUENCE #            = 1-65535
      SATELLITE ID                  = 13,14,15 (N-P)
      SOURCE                        = 51 - 65 (MRS&S)
      DESTINATION                   = 10 (All GTACS)
      # OF DATA HALF-WORDS          = 32
      DATA TYPE                     = 14
      DATA SUBTYPE                  = 1 (MRS&S STATUS)
      TRACER                        = ASCII BLANKS
      MESSAGE COUNT                 = 1
      END OF MESSAGE                = 255
      ROUTING ID                    = N/A
```

Message 14-1 – MRS&S Status (GOES N-P Only) (2 of 4)

DATA BLOCK LAYOUT:

HALF-WORD NO.	MSB 0	1	2	3	4	5	6	7	8	9	10	11	12	13	14	LSB 15
1	YEAR															
2	F	DAY OF YEAR											HR(10s)			
3	HR(1s)				MINUTES								SEC(10s)			
4	SEC(1s)				MSECS											
5	BIT ERROR RATE (MSH)															
6	BIT ERROR RATE (LSH)															
7	MDL CLOCK LOSS COUNT															
8	MDL DATA LOSS COUNT															
9	MDL SYNC LOSS COUNT															
10	NT2209 CLOCK LOSS COUNT															
11	NT2209 DATA LOSS COUNT															
12	NT2209 SYNC LOSS COUNT															
13	NT2209 BAD CHECKSUM COUNT															
14	NT1694 CLOCK LOSS COUNT															
15	NT1694 DATA LOSS COUNT															
16	NT1694 SYNC LOSS COUNT															
17	NT1694 BAD CHECKSUM COUNT															
18	SXI CLOCK LOSS COUNT															
19	SXI DATA LOSS COUNT															
20	SXI SYNC LOSS COUNT															
21	SXI BAD CRC COUNT															
22	IO1 CLOCK LOSS COUNT															
23	IO1 DATA LOSS COUNT															
24	IO1 SYNC LOSS COUNT															
25	IO1 BAD CRC COUNT															
26	IO2 CLOCK LOSS COUNT															
27	IO2 DATA LOSS COUNT															
28	IO2 SYNC LOSS COUNT															
29	IO2 BAD CRC COUNT															
30	NTP AND MRSS PROCESS STATUS															
31	CLOCK ERROR (MSH)															
32	CLOCK ERROR (LSH)															

Message 14-1 – MRS&S Status (GOES N-P Only) (3 of 4)

DATA ITEM	FORMAT	VALIDATION	UNITS
YEAR	BCD	2000-2025	YEAR
F (TIME CODE FLAG)	BINARY	0 = LOCK 1 = FLYWHEEL	N/A
DOY (DAY OF YEAR)	BCD	1-366	DAY
HOUR	BCD	0-23	HOUR
MIN	BCD	0 - 59	MINUTE
SEC	BCD	0 - 59	SECOND
MSEC	BCD	0 - 999	MSEC
BIT ERROR RATE	R*4	0 - 1E-5	N/A
MDL CLOCK LOSS COUNT	I*2	0 - 2156	FRAMES
MDL DATA LOSS COUNT	I*2	0 - 2156	FRAMES
MDL SYNC LOSS COUNT	I*2	0 - 2156	FRAMES
NT2209 CLOCK LOSS COUNT	I*2	0 - 20	FRAMES
NT2209 DATA LOSS COUNT	I*2	0 - 20	FRAMES
NT2209 SYNC LOSS COUNT	I*2	0 - 20	FRAMES
NT2209 BAD CHKSUM COUNT	I*2	0 - 20	FRAMES
NT1694 CLOCK LOST COUNT	I*2	0 - 20	FRAMES
NT1694 DATA LOSS COUNT	I*2	0 - 20	FRAMES
NT1694 SYNC LOST COUNT	I*2	0 - 20	FRAMES
NT1694 BAD CHKSUM COUNT	I*2	0 - 20	FRAMES
SXI CLOCK LOSS COUNT	I*2	0 - 295	FRAMES
SXI DATA LOSS COUNT	I*2	0 - 295	FRAMES
SXI SYNC LOSS COUNT	I*2	0 - 295	FRAMES
SXI BAD CRC COUNT	I*2	0 - 295	FRAMES
IO1 CLOCK LOSS COUNT	I*2	0 - 295	FRAMES
IO1 DATA LOSS COUNT	I*2	0 - 295	FRAMES
IO1 SYNC LOSS COUNT	I*2	0 - 295	FRAMES
IO1 BAD CRC COUNT	I*2	0 - 295	FRAMES
IO2 CLOCK LOSS COUNT	I*2	0 - 295	FRAMES
IO2 DATA LOSS COUNT	I*2	0 - 295	FRAMES
IO2 SYNC LOSS COUNT	I*2	0 - 295	FRAMES
IO2 BAD CRC COUNT	I*2	0 - 295	FRAMES
TIME CODE`	BINARY	0 = NONE 1 = NTP	N/A
TIME INIT ERROR	BINARY	0 = NONE 1 = INIT ERR	N/A
TIME SYSTEM ERROR	BINARY	0 = NONE 1 = SYSTEM ERR	N/A
TIME FLYWHEEL	BINARY	0 = NO 1 = FLYWHEEL	N/A
TIME MAX DELTA	BINARY	0 = NO 1 = MAX DELTA	N/A

Message 14-1 – MRS&S Status (GOES N-P Only) (4 of 4)

DATA ITEM	FORMAT	VALIDATION	UNITS
TIME PRIVILEGE	BINARY	0 = OK 1 = PRIV ERR	N/A
TIME SOURCE	BINARY	0 = NONE 1 = NTP	N/A
SPARE	BINARY	0	N/A
SPARE	BINARY	0	N/A
SERVER STATUS	BINARY	0 = OFF 1 = ON	N/A
TLM FMT STATUS	BINARY	0 = OFF 1 = ON	N/A
ARCHIVE STATUS	BINARY	0 = OFF 1 = ON	N/A
DEMUX STATUS	BINARY	0 = OFF 1 = ON	N/A
FSYNC STATUS	BINARY	0 = OFF 1 = ON	N/A
CONFIG STATUS	BINARY	0 = OFF 1 = ON	N/A
CLOCK ERROR (MSH)	I*2	0-255	N/A
CLOCK ERROR (LSH)	I*2	0-255	N/A

Notes:

1. Clock loss count is the estimated total number of frames of data lost due to clock loss since the last status report was sent. (Clock loss indicates that no data is being received.)
2. Data loss count is the estimated total number of frames of data lost due to data loss since the last status report was sent. (Data loss indicates that no sync code data is being received.)
3. Sync loss count is the estimated total number of frames of data lost due to sync loss since the last status report was sent. (Sync loss indicates the absence of a sync code for one or more frames.)
4. Estimated frame counts are found by dividing time span by expected time per frame.
5. Bad Checksum Count is the total number of synced PCM telemetry minor frames received with bad checksum values since the last status report was sent.
6. Bad CRC Count is the total number of synced instrument transfer frames received with bad CRC values since the last status report was sent.

Message 15 (Subtypes 10-FF) – MDL Telemetry Messages (GOES N-P Only) (1 of 2)

The SXI downlinks a variety of non-image data types (e.g., housekeeping telemetry, HASS data, and computer events) in packets identified by APID (Application ID). The MRS&S Message 15 provides a capability to transmit the contents of any of these packets by defining a subtype for desired APIDs. Message 15s can also be used for instrument of opportunity source packets or PCM minor frames by defining appropriate message subtypes. The message frequency is commanded by GTACS using a Message 115. The following pages contain a description of Message 15's block layout and field definitions.

```
HEADER BLOCK FIELDS:
      MESSAGE SEQUENCE NO.          = 1-65535
      SATELLITE ID                  = 13,14,15 (N-P)
      SOURCE                        = 51 - 65 (MRS&S)
      DESTINATION                   = 10 (All GTACS)
      NO. OF HALF-WORDS             = 6 up to 426
      DATA TYPE                     = 15
      DATA SUBTYPE
      APID(hex):                    = 10 - SXI HOUSEKEEPING
                                    = 13 - SXI IMAGE SUMMARY
                                    = 20 - SXI OBSERVING EVENTS
                                    = 21 - SXI COMPUTER EVENTS
                                    = 31 - SXI MEMORY DUMP
                                    = FE - PCM1 Telemetry
                                    = FF - PCM2 Telemetry
      TRACER                        = ASCII BLANKS
      MESSAGE COUNT                 = (1 to 255, as defined for the subtype)
      END OF MESSAGE                = (if message count is equal to the max
                                       count defined for the subtype, then 255,
                                       else 0)
      ROUTING ID                    = N/A
```

DATA BLOCK LAYOUT:

HALF-WORD NO.	MSB 0	1	2	3	4	5	6	7	8	9	10	11	12	13	14	LSB 15
1	YEAR															
2	F	DAY OF YEAR											HR(10s)			
3	HR(1s)				MINUTES								SEC(10s)			
4	SEC(1s)				MSECS											
5	ZERO FILL													U	Q	D
6	SOURCE PKT BYTE 001							SOURCE PKT BYTE 002								
:	:															
5+n/2	SOURCE PKT BYTE n-1							SOURCE PKT BYTE n								
6+n/2	SPARE ENTRY															

Message 15 (Subtypes 10-FF) – MDL Telemetry Messages (GOES N-P Only) (2 of 2)

DATA ITEM	FORMAT	VALIDATION	UNITS
YEAR	BCD	2000-2025	YEAR
F (TIME CODE FLAG)	BINARY	0 = LOCK 1 = FLYWHEEL	N/A
DOY (DAY OF YEAR)	BCD	1-366	DAY
HOUR	BCD	0-23	HOUR
MIN	BCD	0-59	MINUTE
SEC	BCD	0-59	SECOND
MSEC	BCD	0-999	MSEC
ZERO FILL	BINARY	0000000000000	N/A
U (UPDATE FLAG)	BINARY	0 = NOT UPDATED 1 = UPDATED	N/A
Q (QUALITY FLAG)	BINARY	0 = CRC or CHECKSUM BAD 1 = CRC or CHECKSUM OKAY	N/A
D (DATA FLAG)	BINARY	0 = NO DATA 1 = DATA	N/A
SOURCE PKT DATA	BYTE	1 – 255	N/A
SPARE	I*2	0	N/A

n = number of bytes of source packet or minor frame data defined for the message

The spare entry will be added only to ensure an even number of half-words (i.e., to guarantee the data block size is a 4-byte multiple). Therefore, if n/2 is an odd number, the spare entry will not be added.

Notes:

Message count is the number of messages in the transmission. It can be used to chain multiple source packets.

Message 16 (Subtype 10-FF) – MDL Telemetry Transmission Rate (GOES N-P Only) (1 of 2)

MDL message transmission rates are selected by GTACS using message Type 115. Message Type 16 identifies to GTACS the current selected rate. This message is transmitted every 10 seconds and immediately in response to a requested rate change. The following contains a description of message Type 16's block layout and field descriptions.

```
HEADER BLOCK FIELDS:
      MESSAGE SEQUENCE NO.          = 1-65535
      SATELLITE ID                  = 13,14,15 (N-P)
      SOURCE                        = 51 - 65  (MRS&S)
      DESTINATION                   = 10 (All GTACS)
      NO. OF HALF-WORDS             = 6
      DATA TYPE                     = 16
      DATA SUBTYPE
      APID(hex):                    = 10 - SXI HOUSEKEEPING (non-critical)
                                    = 13 - SXI IMAGE SUMMARY (non-critical)
                                    = 20 - SXI OBSERVING EVENTS (non-critical)
                                    = 21 - SXI COMPUTER EVENTS (critical)
                                    = 31 - SXI MEMORY DUMP (non-critical)
                                    = FE - PCM1 TELEMETRY (non-critical)
                                    = FF - PCM2 TELEMETRY (non-critical)
      TRACER                        = ASCII BLANKS
      MESSAGE COUNT                 = 1
      END OF MESSAGE                = 255
      ROUTING ID                    = N/A
```

DATA BLOCK LAYOUT:

HALF-WORD NO. (MSB 0 … LSB 15)																
1	YEAR															
2	F	DAY OF YEAR											HR(10s)			
3	HR(1s)				MINUTES								SEC(10s)			
4	SEC(1s)				MSECS											
5	MDL MESSAGE TRANSMISSION INTERVAL															
6	SPARE															

Message 16 (Subtype 10-FF) – MDL Telemetry Transmission Rate (GOES N-P Only) (2 of 2)

Data Item	Format	Validation	Units
YEAR	BCD	2000-2025	YEARS
F (TIME CODE FLAG)	BINARY	0 = LOCK 1 = FLYWHEEL	N/A
DOY (DAY OF YEAR)	BCD	1-366	DAYS
HOUR	BCD	0-23	HOURS
MIN	BCD	0-59	MINUTES
SEC	BCD	0-59	SECONDS
MSEC	BCD	0-999	MSECS
MDL MESSAGE INTERVAL	I*2	0-10	SECONDS
SPARE	I*2	0	N/A

Notes:

For SXI Housekeeping data, the range of values for MDL message interval is 0 – 10. For all other subtypes, the range of values for MDL message interval is 0 – 1. A transmission rate of 1 requests data at the maximum rate at which MRS&S can serve the data after receiving the specified data from the spacecraft. A transmission rate of 0 shuts off the flow of non-critical data; flow of critical data is not stopped, regardless of the message interval.

4.3.5 PM-Originated Messages

PM originated messages are listed below in the order in which their detailed descriptions are provided in this section. Message Type and Subtype appear in the lower right hand corner of these pages to assist in easy identification of the pages describing a specific message.

Type	Description	Destination
20	Landmark Measurement	OATS
21	IMC Quality Check Response	OATS
22	IMC Qual Check Completion	OATS
23	PM Health & Status	GIMTACS/GTACS
25	Normalization Look-Up Table (NLUT)	SPS
26	Imager Co-registration Correction Message	SPS
27	PM Text Message	GIMTACS/GTACS

Message 20 – Landmark Measurement (1 of 3)

OATS uses landmark measurements in the O&A estimation process. Message 20 from the PM to OATS includes the landmark ID, landmark latitude, landmark longitude, landmark lines and pixels, and spacecraft ID and time. Message 20 has three subtypes: Imager visible, Sounder visible, and Imager IR. The Message 20 data block layout and field definitions follow.

```
HEADER BLOCK FIELDS:
      MESSAGE SEQUENCE NO.          = 1-65535
      SATELLITE ID                  = 8,9,10,11,12,13,14,15 (I-P)
      SOURCE                        = 11,12,13,14,15,16,17,18,19,29 (PM)
      DESTINATION                   = 32 (ALL OATS)
      NO. OF HALF-WORDS             = 36
      MESSAGE TYPE                  = 20
      MESSAGE SUBTYPE               = 1 - IMAGER VISIBLE
                                    = 2 - SOUNDER VISIBLE
                                    = 3 - IMAGER IR
      TRACER                        = ASCII BLANKS
      MESSAGE COUNT                 = 1
      END OF MESSAGE                = 255
      ROUTING ID                    = N/A
```

Message 20 – Landmark Measurement (2 of 3)

```
DATA BLOCK LAYOUT:
 HALF-
 WORD NO. MSB                                          LSB
          0  1  2  3  4  5  6  7  8  9 10 11 12 13 14 15
         |---------------------------------------------|
      1  |                LANDMARK ID                  |
      .  |                                             |
      4  |                                             |
         |---------------------------------------------|
      5  |  SCAN TIME:       YEAR                      |
         |---------------------------------------------|
      6  |F|DAY OF YEAR                    |  HR (10s) |
         |---------------------------------------------|
      7  |   HR (1s) |       MINUTES        |  SEC(10s) |
         |---------------------------------------------|
      8  |   SEC(1s) |             MSECS                 |
         |---------------------------------------------|
      9  |              LANDMARK LATITUDE              |
     10  |                                             |
         |---------------------------------------------|
     11  |              LANDMARK LONGITUDE             |
     12  |                                             |
         |---------------------------------------------|
     13  |              LANDMARK ALTITUDE              |
     14  |                                             |
         |---------------------------------------------|
     15  |       DETECTOR NO.    |    IR CHANNEL NO.   |
         |---------------------------------------------|
     16  |                 YAW-FLIP FLAG               |
         |---------------------------------------------|
     17  |            INITIAL ESTIMATED LINE           |
     18  |                                             |
         |---------------------------------------------|
     19  |           INITIAL ESTIMATED PIXEL           |
     20  |                                             |
         |---------------------------------------------|
     21  |            MEASURED LANDMARK LINE           |
     22  |                                             |
         |---------------------------------------------|
     23  |            MEASURED LANDMARK PIXEL          |
     24  |                                             |
         |---------------------------------------------|
     25  |            GOODNESS-OF-FIT MEASURE          |
     26  |                                             |
         |---------------------------------------------|
  27&28  |              IMC IDENTIFIER                 |
         |---------------------------------------------|
     29  |                                             |
      .  |                   SPARE                     |
     34  |                                             |
         |---------------------------------------------|
     35  | CORR. PERF. FLAG     |   SCAN DIR E-W FLAG  |
         |---------------------------------------------|
     36  | SIDE 2 ACTIVE FLAG   |        SPARE         |
         |---------------------------------------------|
```

Message 20 – Landmark Measurement (3 of 3)

DATA ITEM	FORMAT	VALIDATION	UNITS
LANDMARK ID	ASCII	N/A	N/A
YEAR	BCD	1989-2025	YEAR
F (TIME CODE FLAG)	BINARY	0-LOCK 1-FLYWHEEL	N/A
DAY OF YEAR	BCD	1-366	DAY
HOUR	BCD	0-23	HOUR
MINUTES	BCD	0-59	MIN
SECONDS	BCD	0-59	SECS
MSECS	BCD	0-999	MSECS
DETECTOR	BINARY	1-8	N/A
IR CHANNEL	BINARY	2,3,4 OR 5	N/A
YAW FLIP FLAG	BINARY	+1 - NORMAL -1 - FLIPPED	N/A
LATITUDE	I*4	-90*10E6 TO +90*10E6	µDEG +NORTH
LONGITUDE	I*4	-180*10E6 TO +180*10E6	µDEG +EAST
ALTITUDE	FLT.PT.	-10 TO +10	KM
LINE	FLT.PT.	1-15787 (IMAGER) 1-3948 4-KM IR 1-1974 8-KM IR 1-1582 (SOUNDER)	VIS LINES LINES LINES LINES
PIXEL	FLT.PT.	1-30680 (IMAGER) 1-7670 1-1758 (SOUNDER)	VIS PIXELS ALL IR PIX PIXELS
GOODNESS-OF-FIT	FLT.PT.	0.0 - 1.0	N/A
IMC ID	ASCII	ANNN	N/A
FLAGS	BINARY	0-1	N/A

Notes:

1. The spare half-word is provided for 32-bit full word bounding. Its contents are null.
2. If no landmark ID is defined for a given landmark measurement, the field is null.
3. The scan time is the time when the landmark image data was received and time-tagged by the SPS.
4. Latitude, longitude, and altitude are given with respect to a reference ellipsoid defined by the *Earth Location User's Guide (ELUG)*.
5. The IR channel field is null for message subtypes 1 and 2.
6. The initial estimate of a landmark's location is calculated from its defined latitude and longitude location and the O&A. If no initial estimate is available, the field contains nulls.
7. The measured landmark location is determined by the operator or by landmark correlation.
8. The Goodness-of-Fit (GOF) measure indicates the degree of correlation achieved. If no correlation was performed for a given landmark measurement, the GOF field contains nulls.
9. The Flag fields are defined as follows:

   Meaning (If set)
   Correlation performed
   Scan direction E-W, else W-E
   Side 2 active, else side 1

Messages 21 and 22 – IMC Quality Check (1 of 3)

The SPS collects IMC terms on a continuous basis for transmission to the PM. Upon request from OATS, the PM buffers and transmits the terms for verification that the IMC has been done correctly. Message 21 contains the N-S and E-W cycles and increments, N-S IMC, E-W IMC, N-S servo error, E-W servo error, and the SPS time tag. Upon completion of the IMC quality check data transmission, the PM issues a Message 22 signaling completion. The Message 21 and 22 data block layouts and field definitions follow.

```
HEADER BLOCK FIELDS:
      MESSAGE SEQUENCE NO.          = 1-65535
      SATELLITE ID                  = 8,9,10,11,12,13,14,15 (I-P)
      SOURCE                        = 11,12,13,14,15,16,17,18,19,29 (PM)
      DESTINATION                   = 41,42,43,44,45,46,47,48,49,50 (I-M OATS)
                                    = 75-85 (N-P OATS)
      NO. OF HALF-WORDS             = UP TO 834
      MESSAGE TYPE                  = 21
      MESSAGE SUBTYPE               = 1 - IMAGER
                                    = 2 - SOUNDER
      TRACER                        = RETURN REQUEST MESSAGE (TYPE 41) TRACER
      MESSAGE COUNT                 = 1
      END OF MESSAGE                = 255
      ROUTING ID                    = N/A

DATA BLOCK LAYOUT:
 HALF-
 WORD NO. MSB                                          LSB
          0  1  2  3  4  5  6  7  8  9 10 11 12 13 14 15
         |-----------------------------------------------|
      1  |              YAW-FLIP FLAG                    |
         |-----------------------------------------------|
      2  |            NUMBER OF RECORDS                  |
         |-----------------------------------------------|_
      3  |            INSTRUMENT STATUS                  | |
         |-----------------------------------------------| |
      4  |  SAMPLE TIME:     YEAR                        | |
         |-----------------------------------------------| |
      5  |F|DAY OF YEAR                    |  HR (10s)   | |  IMC
         |-----------------------------------------------| |  QUALITY
      6  |   HR (1s) |       MINUTES       |  SEC(10s)   | |  CHECK
         |-----------------------------------------------| |  RECORD
      7  |   SEC(1s) |             MSECS                 | |  No.1
         |-----------------------------------------------| |
      8  |                E-W CYCLES                     | |
         |-----------------------------------------------| |
      9  |              E-W INCREMENTS                   | |
         |-----------------------------------------------| |
     10  |                N-S CYCLES                     | |
         |-----------------------------------------------| |
     11  |              N-S INCREMENTS                   | |
         |-----------------------------------------------| |
     12  |        N-S IMAGE MOTION COMPENSATION          | |
         |-----------------------------------------------| |
     13  |        E-W IMAGE MOTION COMPENSATION          | |
         |-----------------------------------------------| |
     14  |                N-S SERVO ERROR                | |
         |-----------------------------------------------| |
     15  |                E-W SERVO ERROR                | |
         |-----------------------------------------------|_
     16  |       IMC QUALITY CHECK RECORDS NO. 2-64      |
      :  |                                               |
    834  |                                               |
         |-----------------------------------------------|
```

Messages 21 and 22 – IMC Quality Check (2 of 3)

DATA ITEM	FORMAT	VALIDATION	UNITS
YAW FLIP FLAG	BINARY	+1 - NORMAL -1 - FLIPPED	N/A
NUMBER OF RECORDS	BINARY	1-64	N/A
INSTRUMENT STATUS	BINARY	(SEE NOTES)	N/A
YEAR	BCD	1989-2025	YEAR
F (TIME CODE FLAG)	BINARY	0 - LOCK 1 - FLYWHEEL	N/A
DAY OF YEAR	BCD	1-366	DAY
HOUR	BCD	0-23	HOUR
MINUTES	BCD	0-59	MIN
SECONDS	BCD	0-59	SECS
MSECS	BCD	0-999	MSECS
CYCLES	BINARY	0-128	CYCLES
INCREMENTS	BINARY	0-6135(IMAGER) 0-2804 (SOUNDER)	INCREMENTS
N-S IMAGE MOTION COMP	BINARY	0-1023(IMAGER) 0-8191 (SOUNDER)	COUNTS
E-W IMAGE MOTION COMP	BINARY	0-1023(IMAGER) 0-8191 (SOUNDER)	COUNTS
N-S SERVO ERROR	BINARY	0-1023(IMAGER) 0-8191 (SOUNDER)	COUNTS
E-W SERVO ERROR	BINARY	0-1023(IMAGER) 0-8191 (SOUNDER)	COUNTS

Notes:

1. The yaw flip flag is set to +1 for a spacecraft in its normal upright orientation and –1 when it is rotated 180° about the yaw axis.

2. Instrument status bits are as follows:

Bit	Meaning – If Set
0	Spacelook in progress
1	ECAL in progress (N/A for the Imager)
2	BB-Cal in progress
3	Normal frame active
4	Priority 1 frame active
5	Priority 2 frame active
6	Scan direction E-W, else W-E
7	Scan direction S-N, else N-S
8	IMC active, else inactive
9	Dwell mode = 4 (Sounder only)
10	Dwell mode = 2 (Sounder only)
11	Dwell mode = 1 (Sounder only)
12	N-S step mode = double (Sounder only)
13	Side 2 active, else side 1
14	Star sense in progress
15	Slew active

3. Bits 8 and 13 are obtained from SPS configuration flags. All other bits are determined directly from the downlinked data.

4. Sample time represents time when IMC and SERVO data is received at the SPS.

5. For the Sounder, IMC and servo error data is in A/D format, as received in the downlinked data.

Message 22 – IMC Quality Check Completion (3 of 3)

```
HEADER BLOCK FIELDS:
   MESSAGE SEQUENCE NO.  = 1-65535
   SATELLITE ID          = 8,9,10,11,12,13,14,15 (I-P)
   SOURCE                = 11,12,13,14,15,16,17,18,19,29 (PM)
   DESTINATION           = 41,42,43,44,45,46,47,48,49,50 (I-M OATS)
                         = 75-85 (N-P OATS)
   NO. OF HALF-WORDS     = 4
   MESSAGE TYPE          = 22
   MESSAGE SUBTYPE       = 0 - SUCCESSFUL COMPLETION
                         = 1 - SATELLITE NOT SUPPORTED
                         = 2 - PREMATURE COMPLETION
                         = 3 - UNABLE TO FULFILL REQUEST
   TRACER                = RETURN REQUEST MESSAGE TRACER (MESSAGE 41)
   MESSAGE COUNT         = 1
   END OF MESSAGE        = 255
   ROUTING ID            = N/A

DATA BLOCK LAYOUT:
   HALF-
   WORD NO. MSB                                                LSB
            0  1  2  3  4  5  6  7  8  9  10  11  12  13  14  15
           |-------------------------------------------------------|
      1    |                                                       |
      .    |              NUMBER OF MESSAGES SENT                  |
      4    |                                                       |
           |-------------------------------------------------------|
```

DATA ITEM	FORMAT	VALIDATION	UNITS
NUMBER OF MESSAGES SENT	I*8	N/A	N/A

Notes:

1. The subtypes and their definition are as follows:

   0 Successful completion: Indicates a successful completion of the IMC data for the period of time requested. If IMC blocks are lost during this period due to possible network congestion, the request is still considered successful.

   1 Satellite not supported: Indicates the satellite requested is not currently supported. If the PM initially supported the requested satellite but changed satellites during the transfer period, the subtype reflects a premature completion.

   2 Premature completion: Indicates when the transfer period expired there was no IMC data being transmitted. This subtype could occur for the following reasons:
   a. The SPS stopped transmitting IMC blocks for the requested instrument.
   b. The GVAR uplink was disconnected.
   c. The satellite supported by the PM changed.

   3 Unable to fulfill request: The request message was considered invalid for the following reasons:
   a. The start time was in the past, not in the future.
   b. The duration period was less than one.
   c. A request is already in progress for instrument specified.

Message 23 – PM Health & Status (1 of 3)

Each PM server sends GIMTACS/GTACS this message every 30 seconds. The PM also sends the status message in response to a GIMTACS/GTACS status request. The message data block layout and field definitions are as follows:

```
HEADER BLOCK FIELDS:
      MESSAGE SEQUENCE NO.          = 1-65535
      SATELLITE ID                  = 8,9,10,11,12,13,14,15 (I-P)
      SOURCE                        = 11,12,13,14,15,16,17,18,19,29 (PM)
      DESTINATION                   = 10 (GIMTACS, GTACS)
      NO. OF HALF-WORDS             = 150
      MESSAGE TYPE                  = 23
      MESSAGE SUBTYPE               = 0
      TRACER                        = ASCII BLANKS
      MESSAGE COUNT                 = 1
      END OF MESSAGE                = 255
      ROUTING ID                    = RETURN ID RECEIVED WITH
                                    STATUS REQUEST

DATA BLOCK LAYOUT:
 HALF-
 WORD NO. MSB                                          LSB
          0  1  2  3  4  5  6  7  8  9 10 11 12 13 14 15
         |-----------------------------------------------|
      1  |                    YEAR                       |
         |-----------------------------------------------|
      2  |F|DAY OF YEAR                    |  HR (10s)   |
         |-----------------------------------------------|
      3  |   HR (1s) |       MINUTES       |  SEC(10s)   |
         |-----------------------------------------------|
      4  |   SEC(1s) |             MSECS                 |
         |-----------------------------------------------|
      5  |                   SERVER ID                   |
      .  |                                               |
      8  |                                               |
         |-----------------------------------------------|
      9  |      Server Status    |    Prime Flag         |
         |-----------------------------------------------|
     10  |  AUTO LMARK Status    |    Stripe Status      |
         |-----------------------------------------------|
     11  |     GVAR Port ID      |      RAID ID          |
         |-----------------------------------------------|
     12  |     Current Satellite |   Current SPS ID      |
         |-----------------------------------------------|
     13  |                   CRC Errors                  |
     14  |                                               |
         |-----------------------------------------------|
     15  |                 Bit Error Rate                |
     16  |                                               |
         |-----------------------------------------------|
     17  |       Number of Lines Dropped - Imager        |
         |-----------------------------------------------|
     18  |             Last Imager Image ID              |
      .  |                                               |
     21  |                                               |
         |-----------------------------------------------|
     22  |             Last Sounder Image ID             |
      .  |                                               |
     25  |                                               |
         |-----------------------------------------------|
     26  |        Number of Lines Dropped - Sounder      |
         |-----------------------------------------------|
```

Message 23 – PM Health & Status (2 of 3)

```
HALF-
WORD NO. MSB                                          LSB
         0  1  2  3  4  5  6  7  8  9 10 11 12 13 14 15
        |---------------------------------------------|
    27  |        Number of Workstations Attached      |
        |---------------------------------------------|
    28  |        ID of Attached Workstation (1)       |
     .  |                                             |
    32  |                                             |
        |---------------------------------------------|
    33  |        ID of Attached Workstation (2)       |
     .  |                                             |
    37  |                                             |
        |---------------------------------------------|
     .  |                      .                      |
        |---------------------------------------------|
    93  |        ID of Attached Workstation (14)      |
     .  |                                             |
    97  |                                             |
        |---------------------------------------------|
    98  |                    Spare                    |
     .  |                                             |
   150  |                                             |
        |---------------------------------------------|
```

DATA ITEM	FORMAT	VALIDATION	UNITS
Year	BCD	2000-2037	Year
F (Time Code Flag)	Binary	0-Lock 1-Flywheel	N/A
Day of Year	BCD	1-366	Days
Hours	BCD	0-23	Hours
Minutes	BCD	0-59	Minutes
Seconds	BCD	0-59	Seconds
Msecs	BCD	0-999	Milliseconds
Server ID	ASCII str	None	N/A
Server Status	Bit flags	0-3	N/A
Prime Flag	Binary	0-1	TBD
AUTO LMARK Status	Binary	0-4	N/A
Stripe Status	Binary	0-3	N/A
GVAR Port ID	Binary	1-4	N/A
RAID ID	Binary	1-4	N/A
Current Satellite	Binary	8-16	N/A
Current SPS ID	Binary	1-9	N/A
CRC Errors	Binary	0-2147483647 (I-M) 0-2247483647 (N-P)	# of CRC errors
Bit Error Rate	Fl. Pt.	0-maximum IEEE fl. pt. num.	Errors per million bits normalized
# of Lines Dropped - Imager	Binary	0-1974	N/A
Last Imager Image ID	same as Msg date	same as Msg date	same as Msg date
Last Sounder Image ID	same as Msg date	same as Msg date	same as Msg date
# of Lines Dropped - Sounder	Binary	0-396	N/A
# of Workstations Attached	Binary	0-10	N/A
ID of Attached Workstations	ASCII str	None	N/A

Message 23 – PM Health & Status (3 of 3)

Notes:

The following information will be in the status message:

Message Time	Time that the status message was formatted, in NOAA BCD format.
Server Id	ASCII string identifying the server (i.e., ASCII characters will be terminated with a null). Examples: srpmsv1, crpmsv3 and grpmsv1
Server Status	A series of bit flags designating the status of the server. Bit 7 (LSB) – 1 = Ingest enabled, 0 = ingest disabled Bit 6 – 1 = archiving enabled, 0 = archiving disabled
Prime Flag	A flag indicating whether this server is designated as the “prime” and is sending landmarking information to OATS. 1 = Prime
Auto LMARK Status	An integer designating the status of the automatic landmarking functionality. 0 = Autolandmarking disabled, 3 = Type 3 enabled, 4 = Type 4 enabled
Stripe Status	An integer indicating whether the automatic stripe detection is enabled or not. 0 = disabled for both Imager & Sounder, 1 = Imager only, 2 = Sounder only, 3 = enabled for both
GVAR port Id	An integer (1-4) designating which of the four possible ports is being used by the server to ingest the GVAR stream.
RAID Id	An integer (1-4) designating which of the four possible RAID areas is being used by this server.
Current Sat Id	An integer (8-16) number of the satellite id extracted from the GVAR stream.
SPS Id	An integer (1-9) representing the SPS Id that is the source of the GVAR stream being received by the PM server.
CRC	An integer number representing the number of CRC error received in the last sampling period.
BER	A floating point number representing the bit error rate. This is the number of bit errors per million bits averaged over the operator specified sample period.
Lines dropped Imager	An integer representing the number of lines dropped in the last Imager image.
Last Imager Image Id	A BCD representation of the date/time of the last Imager image was ingested and placed in the PM archive.
Last Sounder Image Id	A BCD representation of the date/time of the last Sounder image was ingested and placed in the PM archive.
Lines dropped Sounder	An integer representing the number of lines dropped in the last Sounder image.
# of ws	The integer number of the client workstations that are connected to this server.
WS ids	ASCII string identifying each of the client workstations connected to this server (i.e., ASCII string will be terminated with a null). Each of the 14 slots will use 10 bytes. Unused slots will be zero. Examples: srpmws1
Spare	An arbitrary amount of spare for growth.

Message 25 – Imager or Sounder NLUT Message

Approximately once per week, the PM sends the SPS unsolicited Messages 25-1 and 25-2, containing respectively NLUTs for the Imager and Sounder visible detectors. The NLUT values correct the raw visible detector values to remove striping caused by differences in the visible detector responsivities. Each Message 25 contains a detector number, reference detector number, and the NLUT values. Message 25-1, Imager NLUT, and Message 25-2, Sounder NLUT, data block layout and field definitions follow.

Message 25-1 – Imager NLUT Message (1 of 2)

```
HEADER BLOCK FIELDS:
      MESSAGE SEQUENCE NO.  = 1-65535
      SATELLITE ID          = 8,9,10,11,12,13,14,15 (I-P)
      SOURCE                = 11,12,13,14,15,16,17,18,19,29 (PM)
      DESTINATION           = 20,21,22,23,24,25,26,27,28 (SPS) OR 31 (ALL SPS)
      NO. OF HALF-WORDS     = 1040
      MESSAGE TYPE          = 25
      MESSAGE SUBTYPE       = 1 - IMAGER
      TRACER                = ASCII BLANKS
      MESSAGE COUNT         = 1
      END OF MESSAGE        = 255
      ROUTING ID            = N/A

DATA BLOCK LAYOUT:
 HALF-
 WORD NO. MSB                                          LSB
          0  1  2  3  4  5  6  7  8  9 10 11 12 13 14 15
         |---------------------------------------------|
      1  |              DETECTOR NUMBER                |
         |---------------------------------------------|
      2  |          REFERENCE DETECTOR NUMBER          |
         |---------------------------------------------|
      3  |                   YEAR                      |
         |---------------------------------------------|
      4  |F|DAY OF YEAR                    |  HR (10s) |
         |---------------------------------------------|
      5  |   HR (1s) |       MINUTES       |  SEC(10s) |
         |---------------------------------------------|
      6  |   SEC(1s) |             MSECS               |
         |---------------------------------------------|
      7  |                 NLUT VALUES                 |
      .  |           (ONE VALUE PER HALF-WORD)         |
   1030  |                                             |
         |---------------------------------------------|
   1031  |                    SPARE                    |
   1032  |                                             |
         |---------------------------------------------|
   1033  |                     NLUT                    |
      .  |                  IDENTIFIER                 |
   1036  |                                             |
         |---------------------------------------------|
   1037  |                                             |
      .  |                    SPARE                    |
   1040  |                                             |
         |---------------------------------------------|
```

Message 25-1 – Imager NLUT Message (2 of 2)

DATA ITEM	FORMAT	VALIDATION	UNITS
DETECTOR NUMBER	BINARY	1-8	N/A
REFERENCE DET NUMBER	BINARY	1-8	N/A
F (TIME CODE FLAG)	BINARY	0 - LOCK 1 - FLYWHEEL	N/A
YEAR	BCD	1989-2025	YEAR
DAY OF YEAR	BCD	1-366	DAY
HOUR	BCD	0-23	HOUR
MINUTES	BCD	0-59	MIN
SECONDS	BCD	0-59	SECS
MSECS	BCD	0-999	MSECS
NLUT VALUE	BINARY	0-1023	COUNTS
NLUT IDENTIFIER	ASCII	NONE	N/A

Notes:

The PM sends one Imager NLUT message per visible detector, for a total of eight messages, in sequence. The value corresponding to zero counts appears in half-word seven. The value corresponding to 1023 counts appears in half-word 1030. All values are right adjusted.

Message 25-2 – Sounder NLUT Message (1 of 2)

```
HEADER BLOCK FIELDS:
      MESSAGE SEQUENCE NO.  = 1-65535
      SATELLITE ID          = 8,9,10,11,12,13,14,15,16 (I-P)
      SOURCE                = 11,12,13,14,15,16,17,18,19,29 (PM)
      DESTINATION           = 20,21,22,23,24,25,26,27,28 (SPS) OR 31 (ALL SPS)
      NO. OF HALF-WORDS     = 1040
      MESSAGE TYPE          = 25
      MESSAGE SUBTYPE       = 2 - SOUNDER
      TRACER                = ASCII BLANKS
      MESSAGE COUNT         = 1-8
      END OF MESSAGE        = 255/0
      ROUTING ID            = N/A

DATA BLOCK LAYOUT:
 HALF-
 WORD NO. MSB                                          LSB
          |0  1  2  3  4  5  6  7  8  9 10 11 12 13 14 15|
          |-----------------------------------------------|
      1   |               DETECTOR NUMBER                 |
          |-----------------------------------------------|
      2   |           REFERENCE DETECTOR NUMBER           |
          |-----------------------------------------------|
      3   |             NLUT SEGMENT NUMBER               |
          |-----------------------------------------------|
      4   |                    YEAR                       |
          |-----------------------------------------------|
      5   |F|DAY OF YEAR                    |  HR (10s)   |
          |-----------------------------------------------|
      6   |   HR (1s) |       MINUTES       |  SEC(10s)   |
          |-----------------------------------------------|
      7   |   SEC(1s) |             MSECS                 |
          |-----------------------------------------------|
      8   |                 NLUT VALUES                   |
      .   |            (ONE VALUE PER HALF-WORD)          |
   1031   |                                               |
          |-----------------------------------------------|
   1032   |                   SPARE                       |
          |-----------------------------------------------|
   1033   |                   NLUT                        |
     .    |                IDENTIFIER                     |
   1036   |                                               |
          |-----------------------------------------------|
   1037   |                                               |
     .    |                   SPARE                       |
   1040   |                                               |
          |-----------------------------------------------|
```

DATA ITEM	FORMAT	VALIDATION	UNITS
DETECTOR NUMBER	BINARY	1-4	N/A
REFERENCE DET NUMBER	BINARY	1-4	N/A
NLUT SEGMENT NUMBER	BINARY	1-8	N/A
F (TIME CODE FLAG)	BINARY	0 - LOCK 1 - FLYWHEEL	N/A
YEAR	BCD	1989-2025	YEAR
DAY OF YEAR	BCD	1-366	DAY
HOUR	BCD	0-23	HOUR
MINUTES	BCD	0-59	MIN
SECONDS	BCD	0-59	SECS
MSECS	BCD	0-999	MSECS
NLUT VALUE	BINARY	0-8191	COUNTS
NLUT IDENTIFIER	ASCII	NONE	N/A

Message 25-2 – Sounder NLUT Message (2 of 2)

Notes:

1. The spare half-word is provided for 32-bit full word bounding—its contents are null.

2. PM sends eight Sounder NLUT messages per detector, for a total of 32 messages, in sequence. Each message contains 1/8 of an NLUT, referred to as an NLUT segment. Segment 1 contains NLUT entries 0 – 1023, Segment 2 contains NLUT entries 1024 – 2047. This pattern continues for all eight segments.

3. A Sounder NLUT requires eight transmissions of 1024 NLUT values. The first transmission contains count equivalent values for 0 – 1023 counts; the second transmission 1024 – 2047 counts. This pattern continues until the last transmission, which contains values for 7168 – 8191 counts. All values are right-justified. The end-of-message field in the header is set to 255 in the last message transmitted.

Message 26 – Imager Co-registration Correction

The PM transmits an unsolicited Message 26 to the SPS containing co-registration correction factors about once per month. The PM also sends a Message 26 in response to receipt of a Message 6, CORT Data Request, from the SPS. The correction factors define the amount of shifting required within the SPS to align the Imager's visible channel imagery with that generated by the IR channels. Message 26 contains 48 pairs of correction factors, one pair for each half-hour interval of the day. The first pair corresponds to the interval from 00:00:00 to 00:29:59, and the last pair is assigned to the interval 23:30:00 to 23:59:59. The Message 26 data block layout and field definitions follow.

```
HEADER BLOCK FIELDS:
      MESSAGE SEQUENCE NO.  = 1-65535
      SATELLITE ID          = 8,9,10,11,12,13,14,15 (I-P)
      SOURCE                = 11,12,13,14,15,16,17,18,19,29 (PM)
      DESTINATION           = 20,21,22,23,24,25,26,27,28 (SPS) OR 31 (ALL SPS)
      NO. OF HALF-WORDS     = 102
      MESSAGE TYPE          = 26
      MESSAGE SUBTYPE       = 1 - IMAGER
      TRACER                = N/A
      MESSAGE COUNT         = 1
      END OF MESSAGE        = 255
      ROUTING ID            = N/A

DATA BLOCK LAYOUT:
 HALF-
 WORD NO. MSB                                          LSB
         0  1  2  3  4  5  6  7  8  9 10 11 12 13 14 15
        |-----------------------------------------------|
      1 |                   CORT ID                     |
      2 |                                               |
        |-----------------------------------------------|
      3 |                     YEAR                      |
        |-----------------------------------------------|
      4 |           DAY OF YEAR           | HR (10s)    |
        |-----------------------------------------------|
      5 |  HR (1s)  |       MINUTES       | SEC(10s)    |
        |-----------------------------------------------|
      6 |  SEC(1s)  |             MSECS                 |
        |-----------------------------------------------|
      7 |                     E-W                       |
      . |                CO-REGISTRATION                |
     54 |                     TERMS                     |
        |-----------------------------------------------|
     55 |                     N-S                       |
      . |                CO-REGISTRATION                |
    102 |                     TERMS                     |
        |-----------------------------------------------|
```

DATA ITEM	FORMAT	VALIDATION	UNITS
CORT TABLE ID	ASCII	ANNN	N/A
YEAR	BCD	1989-2025	YEAR
DAY OF YEAR	BCD	1-366	DAY
HOUR	BCD	0-23	HOUR
MINUTES	BCD	0-59	MIN
SECONDS	BCD	0-59	SECS
MSECS	BCD	0-999	MSECS
E-W CO-REGISTRATION TERMS	INTEGER	-64 to +64	VIS PIXELS
N-S CO-REGISTRATION TERMS	INTEGER	-8 to +8	VIS DETECTOR LINES

Message 27 – PM Status or Alarm Message

The PM transmits messages to the GIMTACS/GTACS operator, not more often than once per second. A text message consists of 87 ASCII characters including a two-character alarm code. The Message 27 data block layout and specific character formats are as follows:

```
HEADER BLOCK FIELDS:
      MESSAGE SEQUENCE NO.          = 1-65535
      SATELLITE ID                  = 8,9,10,11,12,13,14,15 (I-P)
      SOURCE                        = 11,12,13,14,15,16,17,18,19,29 (PM)
      DESTINATION                   = 10 (GIMTACS, GTACS)
      NO. OF HALF-WORDS             = 80
      MESSAGE TYPE                  = 27
      MESSAGE SUBTYPE               = 0
      TRACER                        = ASCII BLANKS
      MESSAGE COUNT                 = 1
      END OF MESSAGE                = 255
      ROUTING ID                    = N/A

DATA BLOCK LAYOUT:
HALF-
WORD NO. MSB                                          LSB
         0  1  2  3  4  5  6  7  8  9 10 11 12 13 14 15
        |-----------------------------------------------|
      1 |                                               |
      . |                TEXT MESSAGE                   |
     80 |                                               |
        |-----------------------------------------------|
```

DATA ITEM	FORMAT	VALIDATION	UNITS
TEXT MESSAGE	ASCII	N/A	N/A

TEXT MESSAGE FORMAT

1. Time (characters 1 through 17) formatted as: YEAR/DDD HH:MM:SS
2. Spacecraft id (characters 19 & 20) formatted as:
   nn = where nn is the spacecraft number 8, 10, 12, etc.
3. Message origin (characters 22 through 28) formatted as:
   aaaaaaa = indicates the platform that originated the message. (wrpmsv1,2 &3, srpmsv 1,2,3 & 4, rpmws1,2,3,4,5,6,7,8,9,10,11,12,13,14,15,16,17)
4. Message id (characters 30 through 35) formatted as:
   aaannn = where aaa is code for which process and nnn is a three digit number.
5. Alarm field (characters 37 and 38) defined as:
   ! = normal status
   !! = alarm
6. Text (characters 39-160) Actual message is ASCII and remainder of space is 0 filled.

Notes:

Eight-bit ASCII character pairs are formatted into half-words by placing the first character in the most significant byte (bits 0–7) and the second character in the least significant byte (bits 8–15).

4.3.6 OATS-Originated Messages

OATS originated messages are listed below in the order in which their detailed descriptions are provided in this section. Message Type and Subtype appear in the lower right hand corner of these pages to assist in easy identification of the pages describing a specific message.

Type	Description	Destination
33	O&A Data Response	SPS
41	IMC Quality Check Request	PM
42	Terminate IMC Qual Check	PM
45	OATS Inter-node Message	OATS
51	Star View CMD Parameter Request	GIMTACS/GTACS
53	IMC, SMC, or SCC Coefficient Data	GIMTACS/GTACS
53-LUT	IMC, SMC or SCC Look-Up Table Format	GIMTACS/GTACS
54	OATS Status	GIMTACS/GTACS
55	Scan Frame Response	GIMTACS/GTACS
56	SK CMD Parameters	GIMTACS/GTACS
57	Momentum Dump Command	GTACS
58	Trim Tab Command Params	GIMTACS
59	Eclipse Prediction Response	GIMTACS/GTACS
60	Sensor Intrusion Response	GIMTACS/GTACS
61	DIRA Drift Command	GIMTACS
62	IMC, SMC, or SCC Set Ready	GIMTACS/GTACS
63	SSAA IMC Set Ready	GIMTACS
66	DIRA Cal Data Request	GIMTACS
67	Trim Tab Data Request	GIMTACS
70	Propulsion Subsystem Data Request	GIMTACS/GTACS
71	Star Window Request	GIMTACS/GTACS
72	OATS Alarm Message	GIMTACS/GTACS
73	Torque Table Update	GTACS
75	IMC Scale Factor Calibration Schedule Response	GIMTACS/GTACS
80	IMC Scale Factors	GIMTACS/GTACS
81	MMC Scale Factors	GIMTACS/GTACS
82	Request Error Message	GTACS
85	MMC Calibration Data Request	GIMTACS
87	SMC Data Request	GIMTACS
88	Thermal Snap Data Request	GIMTACS

Message 33 – O&A Data Response (1 of 5)

Message 33 originates from OATS and is sent to the SPSs. The message contains orbital position and instrument attitude references, as well as dynamic coefficients representing orbital and attitude motions. These data are used by the SPS to Earth locate and grid the Imager and Sounder data. If IMC is in effect, the SPS uses the reference position and instrument attitudes as constants. If IMC is turned off, the SPS dynamically evaluates the orbital position and instrument attitudes from the coefficients and the related reference data. Message 33 is sent unsolicited to all active SPSs each time a new IMC coefficient set is computed. The SPSs then put the newly received set into effect when they receive a Message 110-6 from GIMTACS/GTACS. Message 33 is also sent to the requesting SPS in response to a Message 3. The Message 33 data block layout and field definitions follow.

```
HEADER BLOCK FIELDS:
      MESSAGE SEQUENCE NO. = 1-65535
      SATELLITE ID         = 8,9,10,11,12,13,14,15 (I-P)
      SOURCE               = 41,42,43,44,45,46,47,48,49,50 (I-M OATS)
                           = 75-85 (N-P OATS)
      DESTINATION          = 20,21,22,23,24,25,26,27,28(SPS) or 31 (ALL SPSs)
      NO. OF HALF-WORDS    = UP TO 1230
      MESSAGE TYPE         = 33
      MESSAGE SUBTYPE      = 1 - FULL SET (24 HR)
                           = 2 - NEW ORBIT REFERENCE SET
                           = 3 - SSAA, COUPLED IMAGER/SOUNDER
                           = 4 - SSAA UNCOUPLED IMAGER/SOUNDER
                           = 5 - POST-STATIONKEEPING FULL SET
                           = 6 - SHORT SPAN O&A ADJUST
      TRACER               = ASCII BLANKS
      MESSAGE COUNT        = 1
      END OF MESSAGE       = TRUE
      ROUTING ID           = N/A
```

Message 33 – O&A Data Response (2 of 5)

```
DATA BLOCK LAYOUT:
 HALF-
 WORD NO. MSB                                          LSB
          0  1  2  3  4  5  6  7  8  9 10 11 12 13 14 15
        |-----------------------------------------------|
      1 |              IMC SET IDENTIFIER               |
      2 |
        |-----------------------------------------------|
      3 |                    SPARE                      |
      . |
      6 |
        |-----------------------------------------------|
      7 |                 YAW FLIP FLAG                 |
      8 |
        |-----------------------------------------------|
      9 |              REFERENCE LONGITUDE              |
     10 |
        |-----------------------------------------------|
     11 |    REFERENCE RADIAL DIFFERENCE FROM NOMINAL   |
     12 |
        |-----------------------------------------------|
     13 |               REFERENCE LATITUDE              |
     14 |
        |-----------------------------------------------|
     15 |               REFERENCE ORBIT YAW             |
     16 |
        |-----------------------------------------------|
     17 |              REFERENCE IMAGER ROLL            |
     18 |
        |-----------------------------------------------|
     19 |              REFERENCE IMAGER PITCH           |
     20 |        |
        |-----------------------------------------------|
     21 |              REFERENCE IMAGER YAW             |
     22 |
        |-----------------------------------------------|
     23 |             REFERENCE SOUNDER ROLL            |
     24 |
        |-----------------------------------------------|
     25 |             REFERENCE SOUNDER PITCH           |
     26 |
        |-----------------------------------------------|
     27 |             REFERENCE SOUNDER YAW             |
     28 |
        |-----------------------------------------------|_
     29 |                      YEAR                     | |
        |-----------------------------------------------| | EPOCH
     30 |  |           DAY OF YEAR          |  HR (10s) | | DATE
        |-----------------------------------------------| | AND
     31 |  HR (1s)  |        MINUTES         |  SEC (10s)| | TIME
        |-----------------------------------------------| |
     32 |  SEC (1s) |            MSEC                   | |
        |-----------------------------------------------|_
     33 |   RECOMMENDED IMC SET ENABLE TIME FROM EPOCH  |
     34 |
        |-----------------------------------------------|
     35 |       SPACECRAFT COMPENSATION - ROLL          |
     36 |
        |-----------------------------------------------|
     37 |       SPACECRAFT COMPENSATION - PITCH         |
     38 |
        |-----------------------------------------------|
     39 |      SPACECRAFT COMPENSATION - YAW            |
     40 |
        |-----------------------------------------------|
     41 |      CHANGE IN LONGITUDE FROM REFERENCE       |
      . |                13 COEFFICIENTS                |
     66 |
        |-----------------------------------------------|
     67 |   CHANGE IN RADIAL DISTANCE FROM REFERENCE    |
      . |                11 COEFFICIENTS                |
     88 |
```

Message 33 – O&A Data Response (3 of 5)

HALF-WORD NO.	MSB 0 1 2 3 4 5 6 7 8 9 10 11 12 13 14 15 LSB
89 . 106	SINE OF GEOCENTRIC LATITUDE (TOTAL) 9 COEFFICIENTS
107 . 124	SINE OF ORBIT YAW (TOTAL) 9 COEFFICIENTS
125 126	DAILY SOLAR RATE
127 128	EXPONENTIAL START TIME FROM IMC EPOCH
129 130	HALF-WORD NO. WHERE SOUNDER COEFFS BEGIN
131 132	EXPONENTIAL MAGNITUDE
133 134	EXPONENTIAL TIME CONSTANT
135 136	CONSTANT MEAN ATTITUDE ANGLE
137 138	NUMBER OF FOURIER AND PHASE ANGLES (K)
139 140	MAGNITUDE OF FIRST-ORDER FOURIER
141 142	PHASE ANGLE OF FIRST-ORDER FOURIER
143 . 4K+138	MAGNITUDES AND PHASE ANGLES OF SECOND THROUGH K-TH ORDER FOURIER
4K+139 4K+140	NUMBER OF MONOMIAL SINUSOIDS (N)
4K+141 4K+142	ORDER OF SINUSOID
4K+143 4K+144	ORDER OF MONOMIAL
4K+145 4K+146	MAGNITUDE OF SINUSOID
4K+147 4K+148	PHASE ANGLE OF MONOMIAL SINUSOID
4K+149 4K+150	ANGLE FROM EPOCH WHERE MONOMIAL IS ZERO
4K+151 . 4K+140 +10N	ORDERS, MAGNITUDES, PHASE ANGLES, AND LOCATION ANGLES FROM EPOCH FOR UP TO THREE ADDITIONAL MONOMIAL SINUSOIDS

Message 33 – O&A Data Response (4 of 5)

DATA ITEM	FORMAT	VALIDATION	UNITS
IMC SET IDENTIFIER	ASCII	ANNN	N/A
YAW FLIP FLAG	I*4	+1, -1	N/A
REFERENCE LONGITUDE	R*4	-π TO +π	RAD +EAST
REFERENCE RADIAL DIFFERENCE	R*4	-1000 TO +1000	KM
REFERENCE LATITUDE	R*4	-.065 To +.065	RAD +NORTH
REFERENCE ORBIT YAW	R*4	-.065 To +.065	RAD
REFERENCE IMAGER & SOUNDER			
ROLL, PITCH, YAW	R*4	-.002 TO +.002	RAD
EPOCH DATE AND TIME YEAR	BCD	1989-2025	YEAR
DAY OF YEAR	BCD	1-366	DAY
HOUR	BCD	0-23	HOUR
MINUTE	BCD	0-59	MIN
SECOND	BCD	0-59	SEC
MSEC	BCD	0-999	MSEC
RECOMMENDED ENABLE TIME FROM			
IMC EPOCH	R*4	-720 to 1440, 9999	
		See Note 13 below	MIN
SPACECRAFT COMPENSATION			
ROLL, PITCH, YAW	R*4	-.004 TO +.004	RAD
CHANGE IN LONGITUDE FROM REF.	R*4	-0.1 To +0.1	RAD
CHANGE IN RADIAL DISTANCE	R*4	-2700 To +2700	KM
SINE OF GEOCENTRIC LATITUDE	R*4	-0.1 TO +0.1	N/A
SINE OF ORBIT YAW	R*4	-0.1 TO +0.1	N/A
DAILY SOLAR RATE	R*4	.00433 TO .00440 (I-M)	RAD/MIN
	R*4	.00433 To 0.027 (N-P)	RAD/MIN
EXPONENTIAL START TIME			
FROM IMC EPOCH	R*4	-1440 TO +1440	MIN
HALF-WORD NO. FOR SDR DATA	I*4	131 TO 681	HALF-WORDS
EXPONENTIAL MAGNITUDE	R*4	-.004 TO +.004	RAD
EXPONENTIAL TIME CONSTANT	R*4	13 TO 1440	MIN
MEAN ATTITUDE ANGLE	R*4	-.01 TO +.01	RAD
NUMBER OF FOURIER, ANGLES	I*4	0-15	N/A
MAGNITUDE OF FOURIER	R*4	-0.01 TO +0.01	RAD
PHASE ANGLE OF FOURIER	R*4	-π TO +π	RAD
NUMBER OF MONOMIAL SINUSOID	I*4	0-4	N/A
ORDER OF SINUSOID	I*4	0-15	N/A
ORDER OF MONOMIAL	I*4	1-15	N/A
MAG OF MONOMIAL SINUSOID	R*4	-.001 TO +.001	RAD
PHASE ANGLE OF SINUSOID	R*4	-π TO +π	RAD
ANGLE FROM EPOCH	R*4	-π TO +π (I-M)	RAD
	R*4	-5π TO +5π (N-P)	RAD

Notes:

1. The yaw flip flag is set to +1 for a spacecraft in its normal upright orientation and –1 when it is rotated 180° about the yaw axis.
2. Half-words 131 through $4K + 10N + 140$ are repeated for each Imager attitude angle in order of roll, pitch, yaw, roll misalignment, and pitch misalignment. This information is then repeated for the Sounder in the same order, for a total of 10 blocks of attitude angles.
3. The message length is given by $130 + 10(4K + 10N + 10)$, with a maximum length of 1230, 16-bit half-words when $K = 15$ and $N = 4$.
4. A parent IMC set is generally effective throughout the entire registration period. Because of various random phenomena and dynamic range limitations, the parent IMC set may be modified by small IMC subsets for varying subspans of the registration period. The parent IMC set and its modifiers all have the same IMC epoch. All subtypes of Message 33 sent to the SPSs are full length and contain the entire message.

Message 33 – O&A Data Response (5 of 5)

5. The IMC set identifier and validation is described in Section 4.3.2.2.1.
6. A normal parent IMC set, Subtype 1, includes the entire data set as shown. For this subtype the spacecraft compensation terms are zero.
7. A medium-term IMC set, Subtype 2, is used only when the dynamic range cannot be maintained over a 24-hour period. The day is then broken into four or five shorter periods. For the first period, the entire message is sent as a Subtype 1. For each subsequent period, a Subtype 2 message is used in which the reference orbit changes. The epoch for the Subtype 2 message is the same as for the associated Subtype 1 message, and should not be uploaded.
8. A short-term IMC set, Subtype 3, is used only when compensating for Earth sensor errors due to clouds or radiance gradients, when operating with an Earth sensor inhibited due to Sun or Moon intrusions, or when compensating for yaw attitude variation due to magnetic storms, or other similar occurrences, etc. For this case, only the spacecraft compensation terms change. The epoch is the same as that for the currently active coefficient set.
9. A thermally induced IMC set, Subtype 4, is used when compensating for misalignments caused by nonrepeatable on-board thermally induced changes to Imager or Sounder pointing. The spacecraft compensation terms are the same as in the parent set.
10. A post-maneuver parent IMC set, Subtype 5, indicates that a new set of coefficients should be put into effect following a maneuver that is planned and expected to be executed. This provides the best estimate of the IMC coefficients until the post-maneuver orbit and attitude are determined, at which time a new set of coefficients is generated. This message uses all the data fields shown.
11. A medium-term IMC set, Subtype 6, is used only when a short span orbit and attitude adjust is required after a stationkeeping maneuver. The Subtype 6 may modify either a Subtype 5 or a Subtype 1 parent set. The epoch for the Subtype 6 message is the same as for the associated parent set.
12. The recommended enable time is in minutes and is relative to the epoch time. The enable time is commonly a negative number, indicating that the recommended enable time is before the epoch time.
13. The recommended enable times have different validation ranges for each message subtype, as follows:
    Subtype 1: –720 to +1440 min from IMC epoch
    Subtype 2: –720 to +1440 min from IMC epoch
    Subtype 3: 9999 enable as soon as possible (ASAP)
    Subtype 4: 9999 enable ASAP
    Subtype 5: –720 to +1440 min from IMC epoch

Message 41 – IMC Quality Check Request

OATS requests data from the PM to verify that the Imager and Sounder IMC corrections being applied on the spacecraft agree with the current IMC coefficients that OATS has provided to GIMTACS/GTACS. The request may include data from the Imager, the Sounder, or both. The PM responds to the request with one or more Message 21s containing the data for the Imager or the Sounder, although the time spans for the two instruments are identical. The Message 41 data block layout and field definitions follow.

```
HEADER BLOCK FIELDS:
      MESSAGE SEQUENCE NO.          = 1-65535
      SATELLITE ID                  = 8,9,10,11,12,13,14,15 (I-P)
      SOURCE                        = 41,42,43,44,45,46,47,48,49,50 (I-M OATS)
                                    = 75-85 (N-P OATS)
      DESTINATION                   = 11,12,13,14,15,16,17,18,19,29 (PM)
      NO. OF HALF-WORDS             = 6
      MESSAGE TYPE                  = 41
      MESSAGE SUBTYPE               = 1 - IMAGER
                                    = 2 - SOUNDER
                                    = 3 - BOTH
      TRACER                        = UNIQUE ID SUPPLIED BY OATS
      MESSAGE COUNT                 = 1
      END OF MESSAGE                = TRUE
      ROUTING ID                    = N/A

DATA BLOCK LAYOUT:
 HALF-
 WORD NO. MSB                                          LSB
           0  1  2  3  4  5  6  7  8  9 10 11 12 13 14 15
         |-----------------------------------------------|_
      1  |                     YEAR                      | |
         |-----------------------------------------------| |
      2  |  |         DAY OF YEAR            |  HR (10s) | | DATA
         |-----------------------------------------------| | SPAN
      3  |  HR (1s)  |        MINUTES         |  SEC (10s)| | START
         |-----------------------------------------------| | TIME
      4  |  SEC (1s) |               MSECS               | |
         |-----------------------------------------------|_
      5  |               DATA SPAN DURATION              |
      6  |                                               |
         |-----------------------------------------------|
```

DATA ITEM	FORMAT	VALIDATION	UNITS
DATA SPAN START TIME YEAR	BCD	1989-2025	YEAR
DAY OF YEAR	BCD	1-366	DAY
HOUR	BCD	0-23	HOUR
MINUTE	BCD	0-59	MIN
SECONDS	BCD	0-59	SEC
MSEC	BCD	0-999	MSEC
DATA SPAN DURATION	R*4	1-120	MIN

Message 42 – Terminate IMC Quality Check Data

OATS sends Message 42 to the PMs to prematurely terminate transmission of the previously requested IMC quality check data. Message 42 has no data block. The Message 42 layout and field definitions follow.

```
HEADER BLOCK FIELDS:
      MESSAGE SEQUENCE NO.          = 1-65535
      SATELLITE ID                  = 8,9,10,11,12,13,14,15 (I-P)
      SOURCE                        = 41,42,43,44,45,46,47,48,49,50 (I-M OATS)
                                    = 75-85 (N-P OATS)
      DESTINATION                   = 11,12,13,14,15,16,17,18,19,29 (PM)
      NO. OF HALF-WORDS             = 0
      MESSAGE TYPE                  = 42
      MESSAGE SUBTYPE               = 0
      TRACER                        = SEE NOTES
      MESSAGE COUNT                 = 1
      END OF MESSAGE                = TRUE
      ROUTING ID                    = N/A


DATA BLOCK LAYOUT: N/A
```

Notes:

1. Message 42 is normally sent to cancel transmission when IMC quality check data is arriving at the OATS with an unknown tracer. In this case, the Message 42 tracer is the same as for the IMC quality check data Message 21 received.

2. Message 42 may also be sent unsolicited from the OATS to the PM to cancel a pending request for IMC quality check data. In this case, the value of the tracer field is one of the following special character strings. Each string is left-justified and right-padded with blanks to fill the 10-byte tracer field.

"Imager_ _ _ _"	To cancel request for Imager data
"Sounder_ _ _"	To cancel request for Sounder data
"Both_ _ _ _ _ _"	To cancel request for all data

Message 45 – OATS Inter-node Message (1 of 2)

Message 45 allows processes on one OATS node to communicate with processes on another OATS node. The message data block is the complete inter-process message, including the header and data blocks. The Message 45 data block layout and field definitions follow.

```
HEADER BLOCK FIELDS:
      MESSAGE SEQUENCE NO.          = 1-65535
      SATELLITE ID                  = 8,9,10,11,12,13,14,15 (I-P)
                                    = 20,21,22,23,24 (N-P virtual S/C)
      SOURCE                        = 41,42,43,44,45,46,47,48,49,50 (I-M OATS)
                                    = 75-85 (N-P OATS)
      DESTINATION                   = 41,42,43,44,45,46,47,48,49,50 (I-M (OATS)
                                    = 75-85 (N-P OATS)
      NO. OF HALF-WORDS             = VARIABLE (SEE NOTES)
      MESSAGE TYPE                  = 45
      MESSAGE SUBTYPE               = 0
      TRACER                        = BLANKS
      MESSAGE COUNT                 = 1
      END OF MESSAGE                = TRUE
      ROUTING ID                    = N/A

DATA BLOCK LAYOUT:
 HALF-
 WORD NO. MSB                                          LSB
          0  1  2  3  4  5  6  7  8  9 10 11 12 13 14 15
         |-----------------------------------------------|
      1  |          INTERPROCESS MESSAGE TYPE            |
      .  |                                               |
      4  |                                               |
         |-----------------------------------------------|
      5  |         INTERPROCESS MESSAGE SUBTYPE          |
      .  |                                               |
      8  |                                               |
         |-----------------------------------------------|
      9  |               INTERPROCESS MESSAGE            |
      .  |                  SATELLITE NODE               |
     12  |                                               |
         |-----------------------------------------------|
     13  |        INTERPROCESS MESSAGE SATELLITE         |
      .  |                                               |
     16  |                                               |
         |-----------------------------------------------|
     17  |           INTERPROCESS MESSAGE LENGTH         |
      .  |                                               |
     20  |                                               |
         |-----------------------------------------------|
     21  |           INTERPROCESS MESSAGE SENDER         |
      .  |                                               |
     28  |                                               |
         |-----------------------------------------------|
     29  |         INTERPROCESS MESSAGE RECEIVER         |
      .  |                                               |
     34  |                                               |
         |-----------------------------------------------|
     35  |                    SPARE                      |
      .  |                                               |
     40  |                                               |
         |-----------------------------------------------|
     41  |              INTERPROCESS MESSAGE             |
      .  |                      BODY                     |
      .  |                                               |
         |-----------------------------------------------|
```

Message 45 – OATS Inter-node Message (2 of 2)

DATA ITEM	FORMAT	VALIDATION	UNITS
INTERPROCESS MESSAGE TYPE	I*8		N/A
INTERPROCESS MESSAGE SUBTYPE	I*8	N/A	
INTERPROCESS MESSAGE SAT NODE	I*8	41-50 (I-M)	N/A
	I*8	75-85 (N-P)	N/A
INTERPROCESS MESSAGE SAT	I*8	8-12, 20-24 (I-M)	N/A
	I*8	13-17,20-24 (N-P)	N/A
INTERPROCESS MESSAGE LENGTH	I*8		N/A
INTERPROCESS MESSAGE SENDER	C*16		N/A
INTERPROCESS MESSAGE RECEIVER	C*16		N/A
SPARE	I*8		N/A
INTERPROCESS MESSAGE DATA			N/A

Notes:

1. The message length depends upon the length of the interprocess message being sent.

2. Virtual satellites are acceptable since this message stays within the OATS environment.

   OATS node numbers are as follows:

41 = SOAT01	42 = SOAT02
43 = SOAT03	44 = SOAT04
45 = SOAT05	46 = SOAT06
47 = COAT01	48 = COAT02
49 = GOAT01	50 = GOAT02
75 = SOAT11 (SOCC)	76 = SOAT12 (SOCC)
77 = SOAT13 (SOCC)	78 = SOAT14 (SOCC)
79 = SOAT15 (SOCC)	80 = SOAT16 (SOCC)
81 = SOAT17 (SOCC)	82 = COAT11 (CDAS)
83 = COAT12 (CDAS)	84 = COAT13 (CDAS)
85 = GOAT11 (WBU)	

Message 51 – Star View Command Parameter Response (1 of 3)

OATS responds to a Message 151 from GIMTACS/GTACS with command execute times, sensor coordinates, and dwell times for star commands within the Message 151 star command viewing windows. The message may support more than one window, and, for each window, more than one star may be included. For each star, one or more looks are indicated in the message. Since this message has the capacity to exceed the maximum physical message size, multiple messages are transmitted until the entire response is complete.

Half-words 13 – 18 and 25 – 32 in Message 51 are replicated by GIMTACS/GTACS into a Message 202 sent back to OATS. This Message 202 contains measurement data from Message 2 star view command (sets) actually transmitted to the spacecraft and for which the SPS has received star measurement data. The Message 51 data block layout and field definitions follow.

```
HEADER BLOCK FIELDS:
      MESSAGE SEQUENCE NO.          = 1-65535
      SATELLITE ID                  = 8,9,10,11,12,13,14,15 (I-P)
      SOURCE                        = 41,42,43,44,45,46,47,48,49,50 (I-M OATS)
                                    = 75-85 (N-P OATS)
      DESTINATION                   = 10 (GIMTACS)
                                    = 90-101 (GTACS)
      NO. OF HALF-WORDS             = VARIABLE (SEE NOTES)
      MESSAGE TYPE                  = 51
      MESSAGE SUBTYPE               = 1 - IMAGER
                                    = 2 - SOUNDER
      TRACER                        = BLANKS
      MESSAGE COUNT                 = 1-255
      END OF MESSAGE                = TRUE/FALSE
      ROUTING ID                    = AS PROVIDED IN MSG 151

DATA BLOCK LAYOUT:
 HALF-
 WORD NO. MSB                                          LSB
           0  1  2  3  4  5  6  7  8  9 10 11 12 13 14 15
          |-----------------------------------------------|
      1   |               IMC SET IDENTIFIER              |
      2   |
          |-----------------------------------------------|
      3   |                      SPARE                    |
      4   |
          |-----------------------------------------------|
      5   |           NO. OF WINDOWS IN MESSAGE (N)       |
      6   |
          |-----------------------------------------------|
      7   |         NUMBER OF UNACCEPTABLE WINDOWS        |
      8   |
          |-----------------------------------------------|
      9   |               WINDOW SEQUENCE NO.             |
          |-----------------------------------------------|
     10   |             WINDOW ACCEPTABLE FLAG            |
          |-----------------------------------------------|
     11   |           NO. OF STARS IN WINDOW (K)          |
     12   |
          |-----------------------------------------------|
     13   |                     STAR ID                   |
     14   |
          |-----------------------------------------------|
     15   |            NO. OF LOOKS FOR STAR (J)          |
     16   |
```

Message 51 – Star View Command Parameter Response (2 of 3)

```
HALF-
WORD NO. MSB                                          LSB
         0  1  2  3  4  5  6  7  8  9 10 11 12 13 14 15
        |-----------------------------------------------|
    17  |            LOOK NO. IN CMD SEQUENCE           |
    18  |                                               |
        |-----------------------------------------------|
    19  |                 LOOK DWELL REPEATS            |
    20  |                                               |
        |-----------------------------------------------|_
    21  |                      YEAR                     | |
        |-----------------------------------------------| |
    22  |  |         DAY OF YEAR          | HR (10s)    | | STAR
        |-----------------------------------------------| | COMMAND
    23  | HR (1s)  |        MINUTES        | SEC (10s)   | | EXECUTE
        |-----------------------------------------------| | TIME
    24  | SEC (1s) |             MSECS                   |_|
        |-----------------------------------------------|_
    25  |                   E-W CYCLES                  |
    26  |                                               |
        |-----------------------------------------------|
    27  |                 E-W INCREMENTS                |
    28  |                                               |
        |-----------------------------------------------|
    29  |                   N-S CYCLES                  |
    30  |                                               |
        |-----------------------------------------------|
    31  |                 N-S INCREMENTS                |
    32  |                                               |
        |-----------------------------------------------|
    33  |  ADDITIONAL LOOKS FOR THIS STAR REPEAT WORDS  |
16(J+1) |           17 THRU 32 FOR J LOOKS              |
        |-----------------------------------------------|
     .  |  ADDITIONAL STARS AND LOOKS FOR THIS WINDOW   |
     .  |         REPEAT FROM WORD 13 TO ABOVE          |
        |-----------------------------------------------|
     .  |     ADDITIONAL WINDOWS, STARS, AND LOOKS      |
     .  |         REPEAT FROM WORD 9 TO ABOVE           |
     .  |                  SEE NOTES                    |
        |-----------------------------------------------|
```

DATA ITEM	FORMAT	VALIDATION	UNITS
IMC SET IDENTIFIER	ASCII	ANNN	N/A
NO. OF WINDOWS IN MESSAGE	I*4	0-72	N/A
NUMBER UNACCEPTABLE WINDOWS	I*4	0-50	N/A
WINDOW SEQUENCE NO.	I*2	1-65535	N/A
WINDOW ACCEPTABLE FLAG	I*2	1 - YES (SEE NOTES)	N/A
		2 - NO (SEE NOTES)	N/A
NO. OF STARS IN WINDOW	I*2	1-100 (SEE NOTES)	N/A
STAR ID (YALE CAT BS NO.)	I*4	1-9999	N/A
NO. OF LOOKS FOR STAR	I*4	1-16	N/A
LOOK NUMBER IN CMD SEQUENCE	I*4	1-16	N/A
LOOK DWELL REPEATS	I*4	0-63 (IMAGER)	N/A
		0-15 (SOUNDER	N/A
STAR COMMAND EXECUTE			
TIME YEAR	BCD	1989-2025	YEAR
DAY OF YEAR	BCD	1-366	DAY
HOUR	BCD	0-23	HOURS
MINUTE	BCD	0-59	MIN
SECOND	BCD	0-59	SEC
MSEC	BCD	0-999	MSEC
E-W CYCLES	I*4	0-5 (I-M)	CYCLES
		0-7 (N-P)	CYCLES

Message 51 – Star View Command Parameter Response (3 of 3)

DATA ITEM	FORMAT	VALIDATION	UNITS
E-W INCREMENTS	I*4	0-6135 (IMAGER)	INCREMENTS
		0-2405 (SOUNDER)(I-M)	INCREMENTS
		0-2804 (SOUNDER)(N-P)	INCREMENTS
N-S CYCLES	I*4	0-9	CYCLES
N-S INCREMENTS	I*4	0-6135 (IMAGER)	INCREMENTS
		0-2405 (SOUNDER)(I-M)	INCREMENTS
		0-2804 (SOUNDER)(N-P)	INCREMENTS

Notes:

1. An Imager dwell is 1 second; each Sounder dwell is 4 seconds.

2. The number of windows in a message is equal to zero if the satellite is not supported. All remaining items after half-word eight are omitted.

3. Window acceptable flag
   1 = Acceptable (requisite number of stars found)
   2 = Unable to command the requisite number of stars

4. Number of stars in window
   0 = No stars in window, all remaining items for the window are omitted
   N = Number of stars selected for window

5. Message 51 is multiply nested in the order [window [star [look]]] for each look at a star, for each star in a window, and for all windows in the message.

6. If there is more than one look at a star, a star sequence is implied.

7. Half-words 17 – 32 are repeated for each look in a star view.

8. Half-words from 13 on are repeated for each star in a given window.

9. Half-words from nine on are repeated for each window in the message.

10. The message length depends on the number of looks in each sequence, the number of stars in each window, and the number of windows in the message. The message length using the validation limits is given by $8 + N(4 + K(4 + J(16)))$. The maximum length is 824,204 16-bit half-words, when $N = 50$, $K = 100$, and $J = 10$, greater than the maximum frame length limit.

11. Each message contains an integral number of windows and all the nested data associated with those windows. The total number of messages and the number of windows in each message is dependent on the values in the requesting message.

12. The IMC set identifier is identical to the identifier in the associated Message 151. For an explanation of the IMC set identifier, see the notes for Message 151.

Message 53 – IMC Coefficient Command Parameter Response (GOES N-P) (1 of 4)

For GOES N-P, in response to a Message 153 from GTACS requesting a superset of IMC coefficients by a specific ID, OATS returns the requested spacecraft and instrument attitude motion compensation coefficients. The spacecraft ACE evaluates these coefficients repeatedly as the running parameters to compute the instantaneous instrument correction values.

```
HEADER BLOCK FIELDS:
      MESSAGE SEQUENCE NO.          = 1-65535
      SATELLITE ID                  = 13,14,15 (GOES N-P)
      SOURCE                        = 75 – 85 (OATS)
      DESTINATION                   = 90 – 101 (GTACS)
      NO. OF HALF-WORDS             = 1162
      MESSAGE TYPE                  = 53
      MESSAGE SUBTYPE               = 1 - FULL SET (24 HR)
                                    = 2 - NEW ORBIT REFERENCE SET
                                    = 3 - SSAA, COUPLED IMGR/SNDR
                                    = 4 - SSAA, UNCOUPLED
                                    = 5 - POST-SK FULL SET
                                    = 6 - SHORT SPAN O&A ADJUST
      TRACER                        = ASCII BLANKS
      MESSAGE COUNT                 = 1
      END OF MESSAGE                = TRUE
      ROUTING ID                    = N/A (used internally by OATS)
```

DATA BLOCK LAYOUT:

HALF-WORD NO.	MSB 0	1	2	3	4	5	6	7	8	9	10	11	12	13	14	LSB 15	
1	YEAR																UTC EPOCH DATE AND TIME
2		DAY OF YEAR											HR(10s)				
3	HR(1s)				MINUTES								SEC(10s)				
4	SEC(1s)				MSECS												
5	DYNAMIC RANGE FLAG																
6	IMC TYPE																
7	IMC SET IDENTIFIER																
8																	
9	YAW FLIP FLAG																
10																	
11	EPOCH DAY (REFERENCED TO JD2000)																
12																	
13	EPOCH TIME OF DAY (SECONDS FROM EPOCH DAY)																
14																	

Message 53 – IMC Coefficient Command Parameter Response (GOES N-P) (2 of 4)

HALF-WORD NO.	MSB 0 1 2 3 4 5 6 7 8 9 10 11 12 13 14 15 LSB
15 16	FUNDAMENTAL FOURIER FREQUENCY
17 18	NOMINAL EARTH RATE
19 : 66	24 ORBITAL COEFFICIENTS
67 68	SPACECRAFT LONGITUDE REFERENCE
69 70	TRUE GREENWICH HOUR ANGLE (at t_0)
71 72	NOMINAL GEOSYNCH RADIUS
73 74	PRECESSION AND NUTATION QUARTERNION (at t_0) q_1
75 76	PRECESSION AND NUTATION QUARTERNION (at t_0) q_2
77 78	PRECESSION AND NUTATION QUARTERNION (at t_0) q_3
79 80	PRECESSION AND NUTATION QUARTERNION (at t_0) q_4
81 82	EXPONENTIAL START TIME FROM IMC EPOCH
83 84	EXPONENTIAL MAGNITUDE
85 86	EXPONENTIAL TIME CONSTANT
87 88	MAGNITUDE OF ZEROTH ORDER FOURIER
89 : 118	MAGNITUDE OF 1st THROUGH 15th ORDER FOURIER SINE
119 : 148	MAGNITUDE OF 1st THROUGH 15th ORDER FOURIER COSINE
149 150	NUMBER OF MONOMIAL SINUSOIDS (N)

Message 53 – IMC Coefficient Command Parameter Response (GOES N-P) (3 of 4)

HALF-WORD NO.	MSB 0 1 2 3 4 5 6 7 8 9 10 11 12 13 14 15 LSB
151 : 158	ORDER OF 1st THROUGH 4th SINUSOID
159 : 166	ORDER OF 1st THROUGH 4th MONOMIAL
167 : 174	MAGNITUDE OF 1st THROUGH 4th MONOMIAL SINUSOID
175 : 182	PHASE ANGLE OF 1st THROUGH 4th SINUSOID
183 : 190	ANGLE FROM EPOCH WHERE MONOMIAL IS ZERO FOR 1st THROUGH 4th TERMS
191 : 1162	WORDS 83-190 ARE REPEATED FOR PITCH, YAW AND THE MISALIGNMENTS FOR THE IMAGER FOLLOWED BY THE FIVE SOUNDER ANGLES

DATA ITEM	FORMAT	VALIDATION	UNITS
UTC EPOCH DATE AND TIME - YEAR	BCD	2001 TO 2049	YEAR
DAY OF YEAR	BCD	1 TO 366	DAY
HOUR	BCD	0 TO 23	HOUR
MINUTES	BCD	0 TO 59	MIN
SECONDS	BCD	0 TO 59	SECS
MILLISECONDS	BCD	0 TO 999	MSECS
DYNAMIC RANGE FLAG	I*2	1 = LOW 2 = HIGH	N/A
IMC TYPE	I*2	1 – 7	N/A
IMC SET IDENTIFIER	ASCII	ANNN	N/A
YAW FLIP FLAG	I*4	+1 – Normal -1 – Inverted	N/A
EPOCH DAY	I*4	0 TO 10000	N/A
EPOCH TIME OF DAY	R*4	0.0 TO 86400.0	SECONDS
FUNDAMENTAL FOURIER FREQUENCY	R*4	.00001- TO .000437	RAD/SEC
NOMINAL EARTH RATE	R*4	.000010 TO .000073	RAD/SEC
ORBITAL COEFFICIENTS	R*4	-.0065 TO +0.0065	SEE NOTE
SPACECRAFT LONGITUDE REFERENCE	R*4	$-\pi$ TO $+\pi$	RAD
TRUE GREENWICH HOUR ANGLE	R*4	$-\pi$ TO $+\pi$	RAD
PRECESSION AND NUTATION QUATERNION	R*4	-1.0 TO +1.0	N/A
NOMINAL GEOSYNCH RADIUS	R*4	4.E7 TO 4.5E7	METERS

Message 53 – IMC Coefficient Command Parameter Response (GOES N-P) (4 of 4)

DATA ITEM	FORMAT	VALIDATION	UNITS
EXPONENTIAL START TIME	R*4	-43200 TO +43200	SEC FROM EPOCH
EXPONENTIAL MAGNITUDE	R*4	-0.00327 TO +0.00327	RAD
DATA ITEM	FORMAT	VALIDATION	UNITS
EXPONENTIAL TIME CONSTANT	R*4	780 TO 86400	SEC
MAGNITUDE OF ZEROTH TERM	R*4	-0.00327 TO 0.00327	RAD
MAGNITUDE OF COSINE	R*4	-0.0065 TO +0.0065	RAD
MAGNITUDE OF SINE	R*4	-0.0065 TO +0.0065	RAD
NUMBER OF MONOMIAL SINUSOID	R*4	0 TO 4	N/A
ORDER OF SINUSOID	R*4	0 TO 15	N/A
ORDER OF MONOMIAL	R*4	1 TO 15	N/A
MAG OF MONOMIAL SINUSOID	R*4	-0.00065 TO +0.00065	RAD
PHASE ANGLE OF SINUSOID	R*4	$-\pi$ TO $+\pi$	RAD
ANGLE FROM EPOCH	R*4	-5π TO $+5\pi$	RAD

Notes:

1. The yaw flip flag is set to +1 for a spacecraft in its normal upright orientation and –1 when it is rotated 180° about the yaw axis (yaw flipped).
2. Half-words 83 through 190 are repeated for each Imager attitude angle in roll, pitch, yaw, roll misalignment, and yaw misalignment order. This information is then repeated for the Sounder, in the same order, for a total of 10 blocks of attitude angles.
3. The message length is 82 + 10(108), with a length of 1162 16-bit half-words.
4. A parent IMC superset is generally effective throughout the entire image registration period. Because of various random natural phenomena or dynamic range limitations, the parent IMC superset may be modified by small IMC subsets for varying sub-spans of the coregistration period. The parent IMC superset and its modifiers all have the same IMC epoch.
5. The IMC superset identifier and validation is described in Section 4.3.2.2.1.
6. An IMC superset includes the entire set of data as shown.
7. All the Fourier and monomial sinusoid coefficients are included in the table even though many are not used and are set to zero.
8. The EPOCH time is sent in the standard external message format and in the JD2000 format needed by the spacecraft. This form is a 32-bit integer JD2000 day and a 32-bit floating point seconds of JD2000 day.

   The orbital coefficients have various units and limits as indicated:

COEFFICIENT	UNITS	LIMIT
CF1	RAD	±0.065
CF2	NONE	±0.065534
CF3	1/RAD	±0.00032767
CF4–CF6	RAD	±0.065
CF7-CF12	RAD	±0.0032767
CF13–CF14	NONE	±0.0032767
CF15–CF18	RAD	±0.065
CF19-CF20	RAD	±0.0032767
CF21–CF22	NONE	±0.0032767
CF23–CF24	RAD	±0.0032767

The data in half-words 7-1162 constitute the IMC set to be uploaded to the spacecraft IMC buffer.

Message 53 – IMC, SMC, or SCC Coefficient Command Parameter Response (GOES I-M)

For GOES I-M, OATS sends this message either in response to a Message 153 from GIMTACS or as a result of an automatic Short Span Attitude Adjustment (SSAA), In response to a Message 153 from GIMTACS requesting a set of IMC, SMC, or SCC coefficients by a specific ID, OATS sends one of the various Message 53 subtypes containing the requested spacecraft and instrument attitude motion compensation coefficients. Subtypes 1 – 6 are used for IMC sets. Subtype 101 is used for SMC coefficient sets, normally sent once per day during the summer and winter seasons, and Subtype 102 is used for SCC coefficient sets. The spacecraft AOCE evaluates these coefficients repeatedly as the running parameters to compute the instantaneous instrument correction values. In the event programmed functions in the AOCE prove inadequate to model the attitude behavior of the instruments, an alternate set of data can be provided in LUT form by way of a Message 53-LUT. As currently programmed, OATS computes the LUT form of the message only with the current attitude basis function. Should other, as yet unidentified functions be required, both the OATS and the SPS would have to be updated to incorporate these functions. When sent unsolicited as a result of an automatic SSAA, Message 53 is preceded by a Message 63, SSAA IMC Set Ready, to inform GIMTACS that a revised IMC set is on the way. The Message 53 generated from an SSAA always provides an IMC coefficient set and never an SMC or SCC coefficient set. The data block layout and field definitions for the various Message 53 subtypes and the Message 53-LUT follow.

Message 53-1 to 53-6 – IMC Coefficient Command Parameter Response (GOES I-M) (1 of 5)

```
HEADER BLOCK FIELDS:
      MESSAGE SEQUENCE NO.          = 1-65535
      SATELLITE ID                  = 8,9,10,11,12 (GOES I-M)
      SOURCE                        =41,42,43,44,45,46,47,48,48,49,50 (I-M OATS)
      DESTINATION                   = 10 (GIMTACS)
      NO. OF HALF-WORDS             = UP TO 1174
      MESSAGE TYPE                  = 53
      MESSAGE SUBTYPE               = 1 - FULL SET (24 HR)
                                    = 2 - NEW ORBIT REFERENCE SET
                                    = 3 - SSAA, COUPLED IM/SDR
                                    = 4 - SSAA UNCOUPLED IM/SDR
                                    = 5 - POST-SK FULL SET
                                    = 6 – SSO&A ADJUST
      TRACER                        = BLANKS
      MESSAGE COUNT                 = 1
      END OF MESSAGE                = TRUE
      ROUTING ID                    = AS PROVIDED IN MSG 153
```

Message 53-1 to 53-6 – IMC Coefficient Command Parameter Response (GOES I-M) (2 of 5)

```
DATA BLOCK LAYOUT:
 HALF-
 WORD NO. MSB                                          LSB
          0  1  2  3  4  5  6  7  8  9 10 11 12 13 14 15
         |-----------------------------------------------|
      1  |                IMC SET IDENTIFIER             |
      2  |                                               |
         |-----------------------------------------------|
      3  |                SSAA USAGE FLAG                |
      4  |                                               |
         |-----------------------------------------------|
      5  |                     SPARE                     |
      6  |                                               |
         |-----------------------------------------------|
      7  |                 YAW FLIP FLAG                 |
      8  |                                               |
         |-----------------------------------------------|
      9  |            DATA FORMAT INDICATOR              |
         |-----------------------------------------------|
     10  |              DYNAMIC RANGE FLAG               |
         |-----------------------------------------------|
     11  |   RECOMMENDED IMC SET ENABLE TIME FROM EPOCH  |
     12  |                                               |
         |-----------------------------------------------|_
     13  |                     YEAR                      | |
         |-----------------------------------------------| |
     14  |  |         DAY OF YEAR            |  HR (10s)  | | EPOCH
         |-----------------------------------------------| | DATE AND
     15  |  HR (1s)  |        MINUTES         |  SEC (10s) | | TIME
         |-----------------------------------------------| |
     16  |  SEC (1s) |               MSECS                | |
         |-----------------------------------------------|_
     17  |         SPACECRAFT COMPENSATION - ROLL        |
     18  |                                               |
         |-----------------------------------------------|
     19  |         SPACECRAFT COMPENSATION - PITCH       |
     20  |                                               |
         |-----------------------------------------------|
     21  |         SPACECRAFT COMPENSATION - YAW         |
     22  |                                               |
         |-----------------------------------------------|—Subtype 3
     23  |    ATTITUDE CONSTANTS - ROLL, PITCH, YAW,     |
      .  |     ROLL MISALIGNMENT, PITCH MISALIGNMENT     |
     42  |        (5 EACH FOR IMAGER THEN SOUNDER)       |
         |-----------------------------------------------|—Subtype 4
     43  |                                               |
      .  |           24 ORBITAL COEFFICIENTS             |
     90  |                                               |
         |-----------------------------------------------|—Subtypes 2 & 6
     91  |           ADJUSTMENT TO ON-BOARD              |
     92  |              DAILY SOLAR RATE                 |
         |-----------------------------------------------|
     93  |    EXPONENTIAL START TIME FROM UTC MIDNIGHT   |
     94  |                                               |
         |-----------------------------------------------|
     95  |             EXPONENTIAL MAGNITUDE             |
     96  |                                               |
         |-----------------------------------------------|
     97  |           EXPONENTIAL TIME CONSTANT           |
     98  |                                               |
         |-----------------------------------------------|
     99  |    NUMBER OF FOURIER AND PHASE ANGLES (K)     |
    100  |                                               |
```

Message 53-1 to 53-6 – IMC Coefficient Command Parameter Response (GOES I-M) (3 of 5)

```
HALF-
WORD NO. MSB                                          LSB
         0  1  2  3  4  5  6  7  8  9 10 11 12 13 14 15
        |-----------------------------------------------|
   101  |       MAGNITUDE OF FIRST-ORDER FOURIER        |
   102  |                                               |
        |-----------------------------------------------|
   103  |      PHASE ANGLE OF FIRST-ORDER FOURIER       |
   104  |                                               |
        |-----------------------------------------------|
   105  |  MAGNITUDES AND PHASE ANGLES OF 2-ND THROUGH  |
     .  |             K-TH ORDER FOURIER                |
 4K+100 |                                               |
        |-----------------------------------------------|
 4K+101 |        NUMBER OF MONOMIAL SINUSOIDS (N)       |
 4K+102 |                                               |
        |-----------------------------------------------|
 4K+103 |               ORDER OF SINUSOID               |
 4K+104 |                                               |
        |-----------------------------------------------|
 4K+105 |               ORDER OF MONOMIAL               |
 4K+106 |                                               |
        |-----------------------------------------------|
 4K+107 |         MAGNITUDE OF MONOMIAL SINUSOID        |
 4K+108 |                                               |
        |-----------------------------------------------|
 4K+109 |           PHASE ANGLE OF SINUSOID             |
 4K+110 |                                               |
        |-----------------------------------------------|
 4K+111 |               ANGLE FROM EPOCH                |
 4K+112 |            WHERE MONOMIAL IS ZERO             |
        |-----------------------------------------------|
 4K+113 |ORDERS, MAGNITUDES, PHASE ANGLES, AND LOCATION |
     .  | ANGLES FROM EPOCH FOR UP TO THREE ADDITIONAL  |
 4K+112 |               MONOMIAL SINUSOIDS              |
   +10N |-----------------------------------------------|—Subtypes 1 & 5
```

DATA ITEM	FORMAT	VALIDATION	UNITS
IMC SET IDENTIFIER	ASCII	ANNN	N/A
YAW FLIP FLAG	I*4	-1, +1	N/A
SSAA USAGE FLAG	I*4	0 - NOT A REACTIVE SET 1 - BOTH IMC AND STAR SENSE DELTA 2 - IMC ONLY 3 - STAR SENSE DELTA ONLY	N/A
DATA FORMAT INDICATOR	I*2	0 - COEFFICIENT	N/A
DYNAMIC RANGE FLAG	I*2	1 - LOW, 2 - HIGH	N/A
RECOMMENDED ENABLE TIMER FROM IMC EPOCH	R*4	SEE NOTE BELOW	MIN
EPOCH DATE AND TIME- YEAR	BCD	1989-2025	YEAR
DAY OF YEAR	BCD	1-366	DAY
HOUR	BCD	0-23	HOUR
MINUTE	BCD	0-59	MIN
SECOND	BCD	0-59	SEC
MSEC	BCD	0-999	MSEC
SPACECRAFT COMPENSATION ROLL, PITCH, YAW	R*4	-.004 TO +.004	RAD
ATTITUDE CONSTANTS	R*4	-0.00327 TO +0.00327	RAD
ORBITAL COEFFICIENTS	R*4	SEE NOTE #15	
DAILY SOLAR RATE ADJUSTMENT	R*4	-0.0000065 TO +0.0000065	RAD/SEC

Message 53-1 to 53-6 – IMC Coefficient Command Parameter Response (GOES I-M) (4 of 5)

DATA ITEM	FORMAT	VALIDATION	UNITS
EXPONENTIAL START TIME FROM UTC MIDNIGHT	R*4	0.0 TO 1092	MIN
EXPONENTIAL MAGNITUDE	R*4	-0.00327 TO +0.00327	RAD
EXPONENTIAL TIME CONSTANT	R*4	13 TO 1440	MIN
NUMBER OF FOURIER ANGLES	I*4	0-15	N/A
MAGNITUDE OF FOURIER	R*4	-0.0065 TO +0.0065	RAD
PHASE ANGLE OF FOURIER	R*4	$-\pi$ TO $+\pi$	RAD
NUMBER OF MONOMIAL SINUSOID	I*4	0-4	N/A
ORDER OF SINUSOID	I*4	0-15	N/A
ORDER OF MONOMIAL	I*4	1-15	N/A
MAG OF MONOMIAL SINUSOID	R*4	-0.00065 TO +0.00065	RAD
PHASE ANGLE OF SINUSOID	R*4	$-\pi$ TO $+\pi$	RAD
ANGLE FROM EPOCH	R*4	$-\pi$ TO $+\pi$	RAD

Notes:

1. The yaw flip flag is set to +1 for a spacecraft in its normal upright orientation and –1 when it is rotated 180° about the yaw axis.
2. Half-words 95 through $4K + 102 + 10N$ are repeated for each Imager attitude angle in roll, pitch, yaw, roll misalignment, and yaw misalignment order. This information is then repeated in the same order for the Sounder for a total of 10 blocks of attitude angles.
3. The message length is $94 + 10(4K + 10N + 8)$ with a maximum length of 1174 sixteen-bit half-words, when $K = 15$ and $N = 4$.
4. A parent IMC set is generally effective throughout the entire image registration period. Because of various random natural phenomena or dynamic range limitations, the parent IMC set may be modified by small IMC subsets for varying subspans of the co-registration period. The parent IMC set and its modifiers all have the same IMC epoch.
5. The IMC set identifier and validation is described in Section 4.3.2.2.1.
6. A normal parent IMC set, Subtype 1, includes the entire set of data as shown. For this subtype, the spacecraft compensation terms will be zero.
7. A medium-term IMC set, Subtype 2, is used only when the dynamic range cannot be maintained over a 24-hour period and the day is broken into four or five shorter periods. For the first period, the entire message is sent as Subtype 1. For each subsequent period, a Subtype 2 is sent in which the reference orbit changes, and the message terminates with half-word 90. All remaining items are kept the same as the parent set. The epoch for the Subtype 2 message is the same as the associated Subtype 1 message and should not be uploaded.
8. A short-term IMC set, Subtype 3, is used only when compensating for Earth sensor errors due to clouds, radiance gradients, or when operating with an Earth sensor inhibited due to Sun and Moon intrusions, or when compensating for yaw attitude variations due to magnetic storms. For this case, only the spacecraft compensation terms change, and the message terminates with half-word 22. The epoch is the same as that for the currently active coefficient set and should not be uploaded.
9. A thermal induced IMC set, Subtype 4, is used when compensating for misalignments caused by nonrepeatable on-board, thermal changes to Imager or Sounder pointing. The spacecraft compensation terms are the same as in the parent set, and the 10 attitude constants give the correction for Imager and Sounder. The message terminates at half-word 42.
10. A post-maneuver parent IMC set, Subtype 5, indicates that a new set of coefficients are to be put into effect following a planned maneuver. This provides the best estimate of the IMC coefficients until the post-maneuver orbit and attitude are determined, at which time a new set of coefficients is generated. This message uses all the data fields shown.
11. A medium-term IMC set, Subtype 6, is used only when a short span orbit and attitude adjustment is required after a stationkeeping maneuver. Although, a Subtype 5 parent set is generally in effect at this time, the Subtype 6 set may also modify a Subtype 1 parent set. The message contains changes to the three spacecraft compensation attitude terms (half-words 17 to 18, 19 to 20, 21 to 22) and four orbit coefficients (half-words 43 to 44, 49 to 50, 75 to 76, and 77 to 78) with all other items remaining unchanged from the parent set. The message terminates with half-word 90. The Subtype 6 message epoch is the same as for the associated parent set and should not be uploaded.
12. The recommended enable time is in minutes and is relative to the epoch time. The enable time is commonly a negative number, indicating that the recommended enable time is before the epoch time.

Message 53-1 to 53-6 – IMC Coefficient Command Parameter Response (GOES I-M) (5 of 5)

13. All subtypes have the same epoch as the parent type. Subtypes 3, 4, and 6 should be loaded as early as possible. A parent IMC set (subtypes 1 or 5) may be modified at a specific time by a modifying IMC set (Subtype 3, 4, or 6). These modifying IMC sets may be in effect sequentially in any order, but only one modifying set may be in effect at a given time. When the operator changes from one modifying subtype to another, the transition IMC set OATS generates (Subtype 4 or 6) ensures the integrity of the entire IMC process—including the on-board IMC scan correction process and the GIMTACS star commanding correction process. Because of uploading constraints, summation is from i = 1 to 10 of $(2k(i) + 3n(i))$ 380, where the i are the roll, pitch, yaw, roll misalignment, and pitch misalignment for the Imager and Sounder.

14. The recommended enable times have different validation ranges for each message subtype, as follows:

    Subtype 1: –720 to +720 min from IMC epoch
    Subtype 2: –720 to +720 min from IMC epoch
    Subtype 3: 9999 enable as soon as possible (ASAP)
    Subtype 4: 9999 enable ASAP
    Subtype 5: –720 to +720 min from IMC epoch
    Subtype 6: 9999 enable ASAP

15. The orbital coefficients have the following ranges and units:

Orbital Coefficient	Range		Units
CF01	-0.065	+0.065	RAD
CF02	-0.0065536	+0.0065534	NONE
CF03	-0.00032768	+0.00032767	1/RAD
CF04–CF06	-0.065	+0.065	RAD
CF07–CF12	-0.0032768	+0.0032767	RAD
CF13–CF14	-0.0032768	+0.0032767	NONE
CF15–CF18	-0.065	+0.065	RAD
CF19–CF20	-0.0032768	+0.0032767	RAD
CF21–CF22	-0.0032768	+0.0032767	NONE
CF23–CF24	-0.0032768	+0.0032767	RAD

Message 53-101 – SMC Coefficient Command Parameter Response (GOES I-M)

```
HEADER BLOCK FIELDS:
      MESSAGE SEQUENCE NO.          = 1-65535
      SATELLITE ID                  = 8,9,10,11,12 (I-M)
      SOURCE                        = 41,42,43,44,45,46,47,48,49,50 (OATS)
      DESTINATION                   = 10 (GIMTACS)
      NO. OF HALF-WORDS             = UP TO 250
      MESSAGE TYPE                  = 53
      MESSAGE SUBTYPE               = 101 - SMC SET
      TRACER                        = BLANKS
      MESSAGE COUNT                 = 1
      END OF MESSAGE                = TRUE
      ROUTING ID                    = AS PROVIDED IN MSG 153

DATA BLOCK LAYOUT:
 HALF-
 WORD NO. MSB                                          LSB
           0  1  2  3  4  5  6  7  8  9 10 11 12 13 14 15
         |-----------------------------------------------|
      1  |                SMC SET IDENTIFIER             |
      2  |                                               |
         |-----------------------------------------------|
      3  |          TIME INTERVAL BETWEEN POINTS         |
      4  |                                               |
         |-----------------------------------------------|
      5  |                SMC START TIME                 |
      6  |                                               |
         |-----------------------------------------------|
      7  |                   ROLL VALUES                 |
    126  |                                               |
         |-----------------------------------------------|
    127  |                   PITCH VALUES                |
    246  |                                               |
         |-----------------------------------------------|
    247  |               ROLL SCALE FACTOR               |
    248  |                                               |
         |-----------------------------------------------|
    249  |               PITCH SCALE FACTOR              |
    250  |                                               |
         |-----------------------------------------------|
```

DATA ITEM	FORMAT	VALIDATION	UNITS
SMC SET IDENTIFIER	ASCII	NNNA	N/A
TIME INTERVAL BETWEEN POINTS	I*4	512-1464320	MILLISEC
SMC START TIME	I*4	0-86400000	MILLISEC
ROLL VALUES	I*4	-125 to 125	N/A
PITCH VALUES	I*4	-125 to 125	N/A
ROLL SCALE FACTOR	R*4	-.000008 to .00008	RAD
PITCH SCALE FACTOR	R*4	-.000016 to .000016	RAD

Notes:

1. LSB for time interval is 512 msec.
2. LSB for start time is 3072 msec.
3. Roll and pitch values are in the order: 2, 1, 4, 3 … 60, and 59.

Message 53-102 – SCC Coefficient Command Parameter Response (GOES I-M)

```
HEADER BLOCK FIELDS:
      MESSAGE SEQUENCE NO.          = 1-65535
      SATELLITE ID                  = 8,9,10,11,12 (I-M)
      SOURCE                        = 41,42,43,44,45,46,47,48,49,50 (OATS)
      DESTINATION                   = 10 (GIMTACS)
      NO. OF HALF-WORDS             = 42
      MESSAGE TYPE                  = 53
      MESSAGE SUBTYPE               = 102 - SCC SET
      TRACER                        = BLANKS
      MESSAGE COUNT                 = 1
      END OF MESSAGE                = TRUE
      ROUTING ID                    = AS PROVIDED IN MSG 153

DATA BLOCK LAYOUT:
 HALF-
 WORD NO. MSB                                          LSB
           0  1  2  3  4  5  6  7  8  9 10 11 12 13 14 15
         |-----------------------------------------------|
      1  |                SCC SET IDENTIFIER             |
      2  |                                               |
         |-----------------------------------------------|
      3  |                MAGNITUDE VALUES               |
     22  |                                               |
         |-----------------------------------------------|
     23  |                  PHASE VALUES                 |
     42  |                                               |
         |-----------------------------------------------|
```

DATA ITEM	FORMAT	VALIDATION	UNITS
SCC SET IDENTIFIER	ASCII	NNNC	N/A
MAGNITUDE VALUES	R*4	-.000008 to .00008	RAD
PITCH SCALE FACTOR	R*4	-.000016 to .000016	RAD

Message 53 – LUT – IMC, SMC, or SCC LUT Format (GOES I-M) (1 of 5)

```
HEADER BLOCK FIELDS:
      MESSAGE SEQUENCE NO.     = 1-65535
      SATELLITE ID             = 8,9,10,11,12 (I-M)
      SOURCE                   = 41,42,43,44,45,46,47,48,49,50 (OATS)
      DESTINATION              = 10 (GIMTACS)
      NO. OF HALF-WORDS        = UP TO 1072
      MESSAGE TYPE             = 53-LUT
      MESSAGE SUBTYPE          = 1 - FULL SET (24 HR)
                               = 2 - NEW ORBIT REFERENCE SET
                               = 3 - SSAA, COUPLED IM/SDR.
                               = 4 - (NOT APPLICABLE)
                               = 5 - POST-SK FULL SET
                               = 6 - SSO&A ADJUST
      TRACER                   = BLANKS
      MESSAGE COUNT            = 1
      END OF MESSAGE           = TRUE
      ROUTING ID               = AS PROVIDED IN MSG 153

DATA BLOCK LAYOUT:
 HALF-
 WORD NO. MSB                                          LSB
           0  1  2  3  4  5  6  7  8  9 10 11 12 13 14 15
          |-----------------------------------------------|
      1   |               IMC SET IDENTIFIER              |
      2   |-----------------------------------------------|
      3   |                SSAA USAGE FLAG                |
      4   |-----------------------------------------------|
      5   |                    SPARE                      |
      6   |-----------------------------------------------|
      7   |                 YAW FLIP FLAG                 |
      8   |-----------------------------------------------|
      9   |            DATA FORMAT INDICATOR              |
          |-----------------------------------------------|
     10   |              DYNAMIC RANGE FLAG               |
          |-----------------------------------------------|
     11   |   RECOMMENDED IMC SET ENABLE TIME FROM EPOCH  |
     12   |-----------------------------------------------|_
     13   |                      YEAR                     | |
          |-----------------------------------------------| |
     14   |  |         DAY OF YEAR            |  HR (10s)  | | EPOCH
          |-----------------------------------------------| | DATE AND
     15   |  HR (1s)  |        MINUTES         |  SEC (10s) | | TIME
          |-----------------------------------------------| |
     16   |  SEC (1s) |               MSECS                | |
          |-----------------------------------------------|_
     17   |        SPACECRAFT COMPENSATION - ROLL         |
     18   |-----------------------------------------------|
     19   |        SPACECRAFT COMPENSATION - PITCH        |
     20   |-----------------------------------------------|
     21   |        SPACECRAFT COMPENSATION - YAW          |
     22   |-----------------------------------------------|— Subtype 3
     23   |                                               |
      .   |           24 ORBITAL COEFFICIENTS             |
     70   |                                               |
```

Message 53 – LUT – IMC, SMC, or SCC LUT Format (GOES I-M) (2 of 5)

```
HALF-
WORD NO. MSB                                          LSB
         0  1  2  3  4  5  6  7  8  9 10 11 12 13 14 15
        |-----------------------------------------------|— Subtypes 2 & 6
    71  |            ADJUSTMENT TO ON-BOARD             |
    72  |               DAILY SOLAR RATE                |
        |-----------------------------------------------|
    73  |          GAIN VALUE FOR IMAGER ROLL           |
    74  |                                               |
        |-----------------------------------------------|
    75  |         OFFSET VALUE FOR IMAGER ROLL          |
    76  |                                               |
        |-----------------------------------------------|
    77  |                                               |
     .  |                  IMAGER ROLL                  |
   172  |                  (48 VALUES)                  |
        |-----------------------------------------------|
   173  |            GAIN VALUE FOR IMAGER PITCH        |
   174  |                                               |
        |-----------------------------------------------|
   175  |           OFFSET VALUE FOR IMAGER PITCH       |
   176  |                                               |
        |-----------------------------------------------|
   177  |                                               |
     .  |                 IMAGER PITCH                  |
   272  |                  (48 VALUES)                  |
        |-----------------------------------------------|
   273  |             GAIN VALUE FOR IMAGER YAW         |
   274  |                                               |
        |-----------------------------------------------|
   275  |            OFFSET VALUE FOR IMAGER YAW        |
   276  |                                               |
        |-----------------------------------------------|
   277  |                                               |
     .  |                  IMAGER YAW                   |
   372  |                  (48 VALUES)                  |
        |-----------------------------------------------|
   373  |      GAIN VALUE FOR IMAGER ROLL MISALIGNMENT  |
   374  |                                               |
        |-----------------------------------------------|
   375  |    OFFSET VALUE FOR IMAGER ROLL MISALIGNMENT  |
   376  |                                               |
        |-----------------------------------------------|
   377  |                                               |
     .  |           IMAGER ROLL MISALIGNMENT            |
   472  |                  (48 VALUES)                  |
        |-----------------------------------------------|
   473  |     GAIN VALUE FOR IMAGER PITCH MISALIGNMENT  |
   474  |                                               |
        |-----------------------------------------------|
   475  |   OFFSET VALUE FOR IMAGER PITCH MISALIGNMENT  |
   476  |                                               |
        |-----------------------------------------------|
   477  |                                               |
     .  |           IMAGER PITCH MISALIGNMENT           |
   572  |                  (48 VALUES)                  |
        |-----------------------------------------------|
   573  |           GAIN VALUE FOR SOUNDER ROLL         |
   574  |                                               |
        |-----------------------------------------------|
   575  |         OFFSET VALUE FOR SOUNDER ROLL         |
   576  |                                               |
        |-----------------------------------------------|
```

Message 53 – LUT – IMC, SMC, or SCC LUT Format (GOES I-M) (3 of 5)

```
HALF-
WORD NO. MSB                                          LSB
         0  1  2  3  4  5  6  7  8  9 10 11 12 13 14 15
        |-----------------------------------------------|— Subtypes 2 & 6
   577  |                                               |
     .  |                SOUNDER ROLL                   |
   672  |                (48 VALUES)                    |
        |-----------------------------------------------|
   673  |           GAIN VALUE FOR SOUNDER PITCH        |
   674  |                                               |
        |-----------------------------------------------|
   675  |         OFFSET VALUE FOR SOUNDER PITCH        |
   676  |                                               |
        |-----------------------------------------------|
   677  |                                               |
     .  |                SOUNDER PITCH                  |
   772  |                 (48 VALUES)                   |
        |-----------------------------------------------|
   773  |            GAIN VALUE FOR SOUNDER YAW         |
   774  |                                               |
        |-----------------------------------------------|
   775  |          OFFSET VALUE FOR SOUNDER YAW         |
   776  |                                               |
        |-----------------------------------------------|
   777  |                                               |
     .  |                  SOUNDER YAW                  |
   872  |                  (48 VALUES)                  |
        |-----------------------------------------------|
   873  |     GAIN VALUE FOR SOUNDER ROLL MISALIGNMENT  |
   874  |                                               |
        |-----------------------------------------------|
   875  |   OFFSET VALUE FOR SOUNDER ROLL MISALIGNMENT  |
   876  |                                               |
        |-----------------------------------------------|
   877  |                                               |
     .  |           SOUNDER ROLL MISALIGNMENT           |
   972  |                  (48 VALUES)                  |
        |-----------------------------------------------|
   973  |    GAIN VALUE FOR SOUNDER PITCH MISALIGNMENT  |
   974  |                                               |
        |-----------------------------------------------|
   975  |  OFFSET VALUE FOR SOUNDER PITCH MISALIGNMENT  |
   976  |                                               |
        |-----------------------------------------------|
   977  |                                               |
     .  |            SOUNDER PITCH MISALIGNMENT         |
  1072  |                  (48 VALUES)                  |
        |-----------------------------------------------|— Subtypes 1,2,4&5
```

DATA ITEM	FORMAT	VALIDATION	UNITS
IMC SET IDENTIFIER	ASCII	ANNN	N/A
YAW FLIP FLAG	I*4	-1, +1	N/A
SSAA USAGE FLAG	I*4	0 - NOT A REACTIVE SET 1 - BOTH IMC AND STAR SENSE DELTA 2 - IMC ONLY 3 - STAR SENSE DELTA ONLY	N/A
DATA FORMAT INDICATOR	I*2	1 - LOOKUP TABLE	N/A
DYNAMIC RANGE FLAG	I*2	1 - LOW, 2-HIGH	N/A
RECOMMENDED ENABLE TIME FROM IMC EPOCH	R*4	SEE NOTE BELOW	MIN
EPOCH DATE AND TIME- YEAR	BCD	1989-2025	YEAR
DAY OF YEAR	BCD	1-366	DAY

Message 53 – LUT – IMC, SMC, or SCC LUT Format (GOES I-M) (4 of 5)

DATA ITEM	FORMAT	VALIDATION	UNITS
HOUR	BCD	0-23	HOUR
MINUTE	BCD	0-59	MIN
SECOND	BCD	0-59	SEC
MSEC	BCD	0-999	MSEC
SPACECRAFT COMPENSATION			
ROLL, PITCH, YAW	R*4	-.004 TO .004	RAD
ORBITAL COEFFICIENTS	R*4	SEE NOTE #14	
DAILY SOLAR RATE ADJUSTMENT	R*4	-0.0000065 TO +0.0000065	RAD/SEC
GAIN VALUE FOR ANGLES	I*4	1-255	N/A
OFFSET VALUE FOR ANGLES	I*4	0-255	N/A
ATTITUDE VALUES	R*4	0-255	N/A

Notes:

1. The yaw flip flag is set to +1 for a spacecraft in its normal upright orientation and –1 when it is rotated 180° about the yaw axis.

2. A parent IMC set is generally effective throughout the entire registration period. Because of various random phenomena and dynamic range limitations, the parent IMC set may be modified by small IMC subsets for varying subspans of the registration period. The parent IMC set and its modifiers all have the same IMC epoch.

3. The IMC set identifier and validation is described in Section 4.3.2.2.1.

4. A normal set, Subtype 1, includes the entire set of data as shown and spans a 24-hour period. The 48 values for each angle are spaced at half-hour intervals and values are obtained in between by interpolation in the AOCE. For this subtype, the spacecraft compensation terms are zero.

5. A medium-term IMC set, Subtype 2, is used only when the dynamic range cannot be maintained over a 24-hour period, and the day is broken into two or three periods. For the first period, the entire message is sent as Subtype 1. For the second and third periods, the message is a Subtype 2, and either the reference orbital position only is changed and the message terminates at the end of half-word 70, or else both the reference orbit and the reference attitude change, in which case, the entire message is sent. This pattern is repeated until there is a corrective orbital maneuver. The Subtype 2 message epoch is the same as for the associated Subtype 1 message and should not be uploaded.

6. A short-term IMC set, Subtype 3, is used only when compensating for Earth sensor errors due to clouds, radiance gradients, when operating with an Earth sensor, when inhibited due to Sun or Moon intrusions, or when compensating for yaw attitude variations due to magnetic storms. For this case, only the spacecraft compensation terms change, and the message terminates with half-word 22. The epoch is the same as that for the currently active parent coefficient set and should not be uploaded.

7. When compensation for misalignments caused by nonrepeatable on-board thermal changes to Imager or Sounder pointing are required, it is not possible to send a short-term message (Subtype 4) to modify the LUT. Instead, a full IMC set is sent.

8. A post-maneuver parent IMC set, Subtype 5, indicates that a new set of coefficients should be put into effect following a maneuver that is planned and expected to be executed. This provides the best estimate of the IMC coefficients until the post-maneuver orbit and attitude are determined. Once the post-maneuver orbit and attitude are determined, a new set of coefficients is generated. This message uses all the data fields shown and the entire message is sent.

9. A medium-term IMC set, Subtype 6, is used only when a short span orbit and attitude adjustment is required after a stationkeeping maneuver. Although a Subtype 5 parent set is generally in effect at this time, the Subtype 6 set may also modify a Subtype 1 parent set. The message contains changes to the three spacecraft compensation attitude terms (half-words 17 to 18, 19 to 20, 21 to 22) and four orbit coefficients (half-words 23 to 24, 29 to 30, 55 to 56, and 57 to 58) with all other items remaining unchanged from the parent set. The message terminates with half-word 70. Epoch for the Subtype 6 message is the same as for the associated parent set and should not be uploaded.

10. The recommended enable time is in minutes and is relative to the epoch time. The enable time is commonly a negative number, indicating that it is before the epoch time.

11. A parent IMC set, Subtypes 1 or 5, may be modified at a specific time by a modifying IMC set, Subtype 3 or 6. These modifying IMC sets may be sequentially in effect in any order, but only one modifying set may be active at a given time. When the operator changes from one modifying subtype to another, the transition IMC set (Subtype 6) that OATS generates ensures the integrity of the entire IMC process, including the on-board IMC scan correction process and the GIMTACS star commanding correction process.

Message 53 – LUT – IMC, SMC, or SCC LUT Format (GOES I-M) (5 of 5)

12. To maintain consistency in the words representing Imager and Sounder attitude, words 73 – 1072 are in integer format ready to be packed into the spacecraft command. Words 73 – 1072 are an exception to the rule that OATS passes data only in engineering units.

13. The recommended enable times have different validation ranges for each message subtype, as follows:

    Subtype 1: –720 to +720 min from IMC epoch
    Subtype 2: –720 to +720 min from IMC epoch
    Subtype 3: 99999 enable ASAP
    Subtype 4: 99999 enable ASAP
    Subtype 5: –720 to +720 min from IMC epoch
    Subtype 6: 99999 enable ASAP

14. The orbital coefficients have the ranges and units indicated below:

Coefficient	Range		Units
CF01	-0.065	+0.065	RAD
CF02	-0.0065536	+0.0065534	NONE
CF03	-0.00032768	+0.00032767	1/RAD
CF04–CF06	-0.065	+0.065	RAD
CF07–CF12	-0.0032768	+0.0032767	RAD
CF13–CF14	-0.0032768	+0.0032767	NONE
CF15–CF18	-0.065	+0.065	RAD
CF19–CF20	-0.0032768	+0.0032767	RAD
CF21–CF22	-0.0032768	+0.0032767	NONE
CF23–CF24	-0.0032768	+0.0032767	RAD

Message 54 – OATS Status (GOES I-M) (1 of 3)

OATS sends GIMTACS a Message 54-2 in response to a status request. OATS also sends GIMTACS/GTACS unsolicited Message 54-1s at an operator-selectable rate. The Message 54 data block layout and field definitions follow.

```
HEADER BLOCK FIELDS:
      MESSAGE SEQUENCE NO.          = 1-65535
      SATELLITE ID                  = 8,9,10,11,12 (I-M)
      SOURCE                        = 41,42,43,44,45,46,47,48,49,50 (OATS)
      DESTINATION                   = 10 (GIMTACS)
      NO. OF HALF-WORDS             = UP TO 264 (SEE NOTE 7)
      MESSAGE TYPE                  = 54
      MESSAGE SUBTYPE               = 1 - RESPONSE REQUESTED
                                    = 2 - RESPONSE MESSAGE
      TRACER                        = BLANKS
      MESSAGE COUNT                 = 1
      END OF MESSAGE                = TRUE
      ROUTING ID                    = AS PROVIDED IN MSG 154 IF REQUESTED

DATA BLOCK LAYOUT:
 HALF-
 WORD NO. MSB                                          LSB
          0  1  2  3  4  5  6  7  8  9 10 11 12 13 14 15
        |-----------------------------------------------|_
      1 |                     YEAR                      | |
        |-----------------------------------------------| | TIME
      2 |  |         DAY OF YEAR            |  HR (10s) | | STAMP
        |-----------------------------------------------| | FOR
      3 |  HR (1s)  |        MINUTES         |  SEC (10s)| | THIS
        |-----------------------------------------------| | MESSAGE
      4 |  SEC (1s) |               MSECS               | |
        |-----------------------------------------------|_
      5 |               OATS NODE NUMBER                |
      6 |
        |-----------------------------------------------|
      7 |                   OATS TYPE                   |
      8 |
        |-----------------------------------------------|
      9 |                   OATS MODE                   |
     10 |
        |-----------------------------------------------|
     11 |               HEARTBEAT INTERVAL              |
     12 |
        |-----------------------------------------------|
     13 |        NUMBER (N) OF SUPPORTED SATELLITES     |
     14 |
        |-----------------------------------------------|
     15 |                SATELLITE NUMBER               |
     16 |
        |-----------------------------------------------|
     17 |                 IMAGER STATUS                 |
     18 |
```

Message 54 – OATS Status (GOES I-M) (2 of 3)

```
HALF-
WORD NO. MSB                                          LSB
         0  1  2  3  4  5  6  7  8  9 10 11 12 13 14 15
        |-----------------------------------------------|
    19  |                SOUNDER STATUS                 |
    20  |                                               |
        |-----------------------------------------------|
    21  |           CURRENT IMC SET IDENTIFIER          |
    22  |                                               |
        |-----------------------------------------------|
    23  |           SPACECRAFT YAW FLIP STATUS          |
    24  |                                               |
        |-----------------------------------------------|
    25  |      SPACECRAFT EQUIPMENT STATUS              |
     :  |                                               |
    64  |                                               |
        |-----------------------------------------------|
    65  |  REPEAT WORDS 15-64 FOR UP TO FOUR ADDITIONAL |
     :  |              SUPPORTED SATELLITES             |
   264  |                                               |
        |-----------------------------------------------|
```

DATA ITEM	FORMAT	VALIDATION	UNITS
FRAME START TIME YEAR	BCD	1989-2025	YEAR
DAY OF YEAR	BCD	1-366	DAY
HOUR	BCD	0-23	HOUR
MINUTES	BCD	0-59	MINUTES
SECONDS	BCD	0-59	SECONDS
N-SS	BCD	0-999	MSEC
OATS NODE NUMBER	I*4	41-50	N/A
OATS TYPE	I*4	0 - NORMAL 1 - SIMULATION 2 - TEST	N/A
OATS MODE	I*4	0 - PRIMARY 1 - BACKUP	N/A
HEARTBEAT INTERVAL	I*4	1 - 86400	SEC
NO. OF SUPPORTED SATELLITES	I*4	1-5	N/A
SATELLITE NO.	I*4	8-12	N/A
IMAGER STATUS	I*4	0 - OFF 1 - ON	N/A
SOUNDER STATUS	I*4	0 - OFF 1 - ON	N/A
CURRENT IMC SET IDENTIFIER	ASCII	ANNN	N/A
SPACECRAFT YAW FLIP STATE	I*4	1 - FLIPPED 0 - NORMAL	N/A
SPACECRAFT EQUIPMENT STATUS	I*4	0 - OFF 1 - ON	N/A

Notes:

1. The satellite ID in the header is not relevant in this message, since the status of all supported satellites is contained in the message body. However, OATS uses the satellite ID for the first active satellite (in the order 8, 9, 10, 11, and 12) or in the case of no active satellite, satellite ID 8.

2. The time stamp is the time at which this response was generated.

Message 54 – OATS Status (GOES I-M) (3 of 3)

3. The following are OATS node numbers:

41 = SOAT01	42 = SOAT02
43 = SOAT03	44 = SOAT04
45 = SOAT05	46 = SOAT06
47 = COAT01	48 = COAT02
49 = GOAT01	50 = GOAT02

4. The following are OATS types:

   0 – Normal: OATS external message reception and transmission is enabled. What messages are actually allowed to be sent is further restricted by the primary or backup designation. All other OATS processing is enabled.

   1 – Simulation: same as type 'Normal' with additional ingest (and output) external messages from (to) a local file.

   2 – Test: OATS external message reception and transmission is disabled. All other OATS processing is still enabled. The test configuration provides isolated OATS processing.

5. The following are OATS modes:

   0 – Primary: OATS currently supports GOES satellite command and data process. Only one OATS is designated the primary at any one time.

   1 – Backup: One OATS is designated as primary and all other OATS are configured as backup. The backup OATS can be used to support the primary in GOES satellite commanding and data processing. These OATS can become primary at any time by operator command. The OATS health and status is sent from these nodes by way of a Message 54.

6. The heartbeat interval is the time between OATS Message 54s to GIMTACS. GIMTACS generates an alarm if it does not receive a Message 54 at the end of this period. OATS nodes that are shut down or in test mode do not send Message 54s to GIMTACS.

7. OATS can support up to five real satellites concurrently. To be supported, a satellite must have a satellite-dependent database and a minimum set of default run parameter files. The Message 54 length is $50N + 14$ half-words, where N is the number of satellites supported. With $N = 5$, the maximum message length is 264 half-words. Each node can also support five virtual satellites. These are work areas and satellite information for them is not reported to GIMTACS.

8. OATS also reports the yaw flip state of the spacecraft.

9. Provisions have been made for up to 20 pieces of equipment on each satellite. The values represent a copy of results stored in the OATS database updated by way of Message 190.

Message 54 – OATS Status (GOES N-P) (1 of 4)

OATS sends GTACS a Message 54-2 in response to a status request. OATS also sends GTACS unsolicited Message 54-1s at an operator-selectable rate. The Message 54 data block layout and field definitions are as follows:

```
HEADER BLOCK FIELDS:
      MESSAGE SEQUENCE NO.    = 1-65535
      SATELLITE ID            = 13,14,15 (N-P)
      SOURCE                  = 75 – 85 (OATS)
      DESTINATION             = 90 – 101 (GTACS)
      NO. OF HALF-WORDS       = UP TO 64 (SEE NOTE 7)
      MESSAGE TYPE            = 54
      MESSAGE SUBTYPE         = 1 - RESPONSE REQUESTED
                              = 2 - RESPONSE MESSAGE
      TRACER                  = ASCII BLANKS
      MESSAGE COUNT           = 1
      END OF MESSAGE          = TRUE
      ROUTING ID              = N/A (used internally by OATS)
```

Message 54 – OATS Status (GOES N-P) (2 of 4)

DATA BLOCK LAYOUT:

HALF-WORD NO.	MSB 0 1 2 3 4 5 6 7 8 9 10 11 12 13 14 LSB 15	
1	YEAR	TIME STAMP FOR THIS MESSAGE
2	DAY OF YEAR (bits 1–9) / HR(10s) (bits 10–13)	
3	HR(1s) (bits 0–3) / MINUTES (bits 4–9) / SEC(10s) (bits 10–13)	
4	SEC(1s) (bits 0–3) / MSECS (bits 4–15)	
5 6	OATS NODE NUMBER	
7 8	OATS TYPE	
9 10	OATS MODE	
11 12	HEARTBEAT INTERVAL	
13 14	NUMBER (N) OF SUPPORTED SATELLITES	
15 16	SATELLITE NUMBER	
17 18	IMAGER STATUS	
19 20	SOUNDER STATUS	
21 22	CURRENT IMC SET IDENTIFIER	
23 24	SPACECRAFT YAW FLIP STATUS	
25 : 54	REPEAT WORDS 15-24 FOR UP TO FOUR ADDITIONAL SUPPORTED SATELLITES	

Message 54 – OATS Status (GOES N-P) (3 of 4)

DATA ITEM	FORMAT	VALIDATION	UNITS
FRAME START TIME YEAR	BCD	1989-2025	YEAR
DAY OF YEAR	BCD	1-366	DAY
HOUR	BCD	0-23	HOUR
MINUTES	BCD	0-59	MIN
SECONDS	BCD	0-59	SECS
MILLISECONDS	BCD	0-999	MSECS
OATS NODE NUMBER	I*4	75-85	N/A
OATS TYPE	I*4	0 = PRIMARY 1 = BACKUP	N/A
OATS MODE	I*4	0 = NORMAL 1 = TEST	N/A
HEARTBEAT INTERVAL	I*4	1 - 86400	SEC
NO. OF SUPPORTED SATELLITES	I*4	1-5	N/A
SATELLITE NO	I*4	13-16	N/A
IMAGER STATUS	I*4	0 = OFF 1 = ON	N/A
SOUNDER STATUS	I*4	0 = OFF 1 = ON	N/A
CURRENT IMC SET IDENTIFIER	ASCII	ANNN	N/A
SPACECRAFT YAW FLIP STATE	I*4	1 = FLIPPED 0 = NORMAL	N/A

Notes:

1. The satellite ID in the header is not relevant in this message, since the status of all supported satellites is contained in the message body. However, OATS uses the satellite ID for the first active satellite (in the order 13, 14, 15, 16) or in the case of no active satellite, satellite ID is 13.

2. The time stamp is simply the time at which this response was generated.

3. OATS type:

   0 – PRIMARY: The OATS currently supporting GOES satellite commanding and data processing. Only one OATS is designated the primary at any one time.

   1 – BACKUP: All other OATS beside the primary will be configured as backup. These OATS can be used to support the primary in GOES satellite commanding and data processing. These OATS can become primary at any time by operator command. The OATS health and status is sent from these nodes via a Message 54.

4. OATS node numbers:

   75 = SOAT11 (SOCC) 76 = SOAT12 (SOCC)
   77 = SOAT13 (SOCC) 78 = SOAT14 (SOCC)
   79 = SOAT15 (SOCC) 80 = SOAT16 (SOCC)
   81 = SOAT17 (SOCC) 82 = COAT11 (CDAS)
   83 = COAT12 (CDAS) 84 = COAT13 (CDAS)
   85 = GOAT11 (WBU)

Message 54 – OATS Status (GOES N-P) (4 of 4)

5. OATS mode:

   0 – NORMAL: OATS external message reception and transmission is enabled. What messages are actually allowed to be sent is further restricted by the primary/backup designation. All other OATS processing is enabled.

   1 – TEST: OATS external message reception and transmission is disabled. All other OATS processing is still enabled. The test configuration provides isolated OATS processing.

6. The heartbeat interval is the time between OATS Message 54s to GTACS. GTACS generates an alarm if it does not receive a Message 54 at the end of this period. OATS nodes that are shut down or in test mode do not send Message 54s to GTACS.

7. OATS can support up to five real satellites concurrently. To be supported a satellite must have a satellite-dependent database and a minimum set of default run parameter files. The Message 54 length is 10N + 14 half-words, where N is the number of satellites supported. With N = 5, the maximum message length is 64 half-words. Each node can also support five virtual satellites. These are work areas and satellite information for them is not reported to GTACS.

8. OATS also reports the yaw flip state of the spacecraft.

Message 55 – Scan Frame Response (1 of 4)

In response to a Message 155 from GIMTACS/GTACS, OATS converts Imager and Sounder scan frame definition coordinates into cycles and increments. The coordinates in the request message may be in either latitude and longitude for on-Earth coordinates, or scan line and pixel numbers for off-Earth coordinates. The Message 55 data block layout and field definitions follow.

```
HEADER BLOCK FIELDS:
      MESSAGE SEQUENCE NO.       = 1-65535
      SATELLITE ID               = 8,9,10,11,12,13,14,15 (I-P)
      SOURCE                     = 41,42,43,44,45,46,47,48,49,50 (I-M OATS)
                                 = 75-85 (N-P OATS)
      DESTINATION                = 10 (GIMTACS)
                                 = 90-101 (GTACS)
      NO. OF HALF-WORDS          = UP TO 1608 (SEE NOTES)
      MESSAGE TYPE               = 55
      MESSAGE SUBTYPE            = 1 - IMAGER
                                 = 2 - SOUNDER
      TRACER                     = BLANKS
      MESSAGE COUNT              = 1
      END OF MESSAGE             = TRUE
      ROUTING ID                 = AS PROVIDED IN MSG 155
```

```
DATA BLOCK LAYOUT:
 HALF-
 WORD NO. MSB                                          LSB
           0  1  2  3  4  5  6  7  8  9 10 11 12 13 14 15
         |-----------------------------------------------|
      1  |               IMC SET IDENTIFIER              |
      2  |
         |-----------------------------------------------|
      3  |     NUMBER OF SCAN FRAMES IN MESSAGE (J)      |
      4  |
         |-----------------------------------------------|
      5  |                     SPARE                     |
      6  |
         |-----------------------------------------------|
      7  |                   IMC STATUS                  |
      8  |
         |-----------------------------------------------|
      9  |                     YEAR                      |
         |-----------------------------------------------|_
     10  |  |         DAY OF YEAR            |  HR (10s)  | |
         |-----------------------------------------------| | FRAME
     11  |  HR (1s)  |        MINUTES         |  SEC (10s) | | START
         |-----------------------------------------------| | TIME
     12  |  SEC (1s) |               MSECS                | |
         |-----------------------------------------------|_
     13  |               FRAME DURATION                  |
     14  |
         |-----------------------------------------------|
     15  |               SCAN FREQUENCY                  |
     16  |
         |-----------------------------------------------|
     17  |               COORDINATE TYPE                 |
     18  |
         |-----------------------------------------------|
     19  |           SPACELOOK SIDE SELECTION            |
     20  |
         |-----------------------------------------------|
     21  |                SPACELOOK MODE                 |
     22  |
```

Message 55 – Scan Frame Response (2 of 4)

```
HALF-
WORD NO. MSB                                          LSB
         0  1  2  3  4  5  6  7  8  9 10 11 12 13 14 15
        |-----------------------------------------------|
    23  |                DEFAULT FRAME FLAG             |
    24  |
        |-----------------------------------------------|
    25  |              SOUNDER STEPPING MODE            |
    26  |
        |-----------------------------------------------|
    27  |                 OUTPUT STATUS                 |
    28  |
        |-----------------------------------------------|
    29  |            CRITICAL LIMIT INDICATOR           |
    30  |
        |-----------------------------------------------|
    31  |       COMMANDED SCAN START E-W CYCLES         |
    32  |
        |-----------------------------------------------|
    33  |     COMMANDED SCAN START E-W INCREMENTS       |
    34  |
        |-----------------------------------------------|
    35  |       COMMANDED SCAN START N-S CYCLES         |
    36  |
        |-----------------------------------------------|
    37  |    COMMANDED SCAN START N-S INCREMENTS        |
    38  |
        |-----------------------------------------------|
    39  |        COMMANDED SCAN STOP E-W CYCLES         |
    40  |
        |-----------------------------------------------|
    41  |      COMMANDED SCAN STOP E-W INCREMENTS       |
    42  |
        |-----------------------------------------------|
    43  |       COMMANDED SCAN STOP N-S CYCLES          |
    44  |
        |-----------------------------------------------|
    45  |       COMMANDED SCAN STOP N-S INCREMENTS      |
    46  |
        |-----------------------------------------------|
    47  |                    SPARE                      |
    48  |
        |-----------------------------------------------|
    49  |  ADDITIONAL SCAN FRAMES REPEAT WORDS 9 TO 48  |
 40*J+8 |     FOR J-1 SCANS.  SEE NOTES.                |
        |-----------------------------------------------|
```

DATA ITEM	FORMAT	VALIDATION	UNITS
IMC SET IDENTIFIER	ASCII	ANNN	N/A
NO. OF SCAN FRAMES IN MSG	I*4	1-40	N/A
IMC STATUS	I*4	0 - ENABLED 1 - DISABLED	N/A
FRAME START TIME YEAR	BCD	1989-2025	YEAR
DAY OF YEAR	BCD	1-366	DAY
HOUR	BCD	0-23	HOURS
MINUTES	BCD	0-59	MINUTES
SECONDS	BCD	0-59	SECONDS
MSEC	BCD	0-999	MSEC
FRAME DURATION	R*4	>0.0	MIN
SCAN FREQUENCY	R*4	0-5	HZ
COORDINATE TYPE	I*4	1 - LAT/LONG 2 - SCAN LINE/PIXEL 3 – SRSO (GOES I-M)	N/A

Message 55 – Scan Frame Response (3 of 4)

DATA ITEM	FORMAT	VALIDATION	UNITS
SPACELOOK SIDE SELECTION	I*4	1 - EAST SIDE 2 - WEST SIDE	N/A
SPACELOOK MODE	I*4	0 - N/A SOUNDER 1 - FAST SPACE (9.2-SEC INTERVAL) CLAMP 2 - SLOW SPACE (36.6-SEC INTERVAL) CLAMP 3 - SCAN CLAMP	N/A
DEFAULT FRAME FLAG	I*4	0 - USED DATA PROVIDED 1 - USE DEFAULT 1 2 - USE DEFAULT 2 3 - USE DEFAULT 3	N/A
SOUNDER STEPPING MODE	I*4	-1 - N/A IMAGER 0 - NORMAL STEP MODE 1 - 0.2 SEC DWELL 2 - 0.4 SEC DWELL 3 - SKIP MODE	N/A
OUTPUT STATUS	I*4	0-14 (SEE NOTES) (I-M) 0-16 (SEE NOTES) (N-P)	N/A N/A
CRITICAL LIMIT INDICATION	I*4	0-5 (SEE NOTES)	N/A
CMD SCAN START E-W CYCLES	I*4	0-5	CYCLES
CMD SCAN START E-W INC.	I*4	0-6135 (IMAGER) 0-2805 (SOUNDER) (I-M) 0-2804 (SOUNDER) (N-P)	INCREMENTS
CMD SCAN START N-S CYCLES	I*4	0-9	CYCLES
CMD SCAN START N-S INC.	I*4	0-6135 (IMAGER) 0-2805 (SOUNDER) (I-M) 0-2804 (SOUNDER) (N-P)	INCREMENTS
CMD SCAN STOP E-W CYCLES	I*4	0-5	CYCLES
CMD SCAN STOP E-W INC.	I*4	0-6135 (IMAGER) 0-2805 (SOUNDER) (I-M) 0-2804 (SOUNDER) (N-P)	INCREMENTS
CMD SCAN STOP N-S CYCLES	I*4	0-9	CYCLES
CMD SCAN STOP N-S INC.	I*4	0-6135 (IMAGER) 0-2805 (SOUNDER) (I-M) 0-2804 (SOUNDER) (N-P)	INCREMENTS

Notes:

1. The computed scan stop time is approximated.

2. IMC set identifier, IMC status, and Sounder stepping mode are returned as found in the request message and are used in the calculation (see Message 155).

   The output status is:

   0: Successful completion
   1: Warning scan time for Imager was increased, see critical limit indicator
   2: Warning excessive frame duration
   3: Fatal, invisible start latitude and longitude point
   4: Fatal, invisible stop latitude and longitude point
   5: Fatal, maximum number of iterations exceeded, no convergency
   6: Fatal, negative frame duration
   7: Fatal, wrong input latitude
   8: Fatal, wrong input longitude
   9: Fatal, pixel value outside valid limits

Message 55 – Scan Frame Response (4 of 4)

10: Fatal, line value outside valid limits
11: Fatal, unable to get orbit, attitude, or IMC data
12: Warning, requested spacelook side contains intrusion
13: Warning, frame width exceeds SPS max (19.2°)
14: Fatal, one or more values violated validation limits
15: Sun Intrusion into frame (N-P only)
16: Frame scan period entirely within eclipse umbra (N-P only).

The following are critical limit indications:

0: Scan frequency is not within any of the four pairs of critical limits.

1–4: Indicates the requested frame size results in a scan frequency within one of the four pairs (minimum or maximum) of critical limits. The frame boundaries returned by scan represent a large frame size outside of the frequency limit range.

5: Indicates the minimum instrument scan size has been violated and the frame boundaries returned by scan represent a large frame size that does not violate this condition.

Critical limit indications are valid only for the Imager when Sounder stepping mode equals –1, otherwise, these fields are zero. Scan frequency is valid for both the Imager and Sounder.

3. The maximum number of scan frames returned in this message is 40. This is determined by taking the maximum number of half-words (1608), subtracting half-words 1 through 8 (which are not repeated for each scan), dividing the result by the half-words repeated for each scan (40), and discarding the remainder.

Message 56 – Stationkeeping CMD Parameters (GOES I-M) (1 of 2)

OATS uses Message 56 to send computed stationkeeping maneuver thruster parameters to GIMTACS. The Message 56 data block layout and field definitions follow.

```
HEADER BLOCK FIELDS:
      MESSAGE SEQUENCE NO.          = 1-65535
      SATELLITE ID                  = 8,9,10,11,12 (I-M)
      SOURCE                        = 41,42,43,44,45,46,47,48,49,50 (OATS)
      DESTINATION                   = 10 (GIMTACS)
      NO. OF HALF-WORDS             = UP TO 204 (SEE NOTES)
      MESSAGE TYPE                  = 56
      MESSAGE SUBTYPE               = 1 - N-S MANEUVER, THRUSTERS 6/7
                                    = 2 - E-W MANEUVER, THRUSTERS 2/3
                                    = 3 - E-W MANEUVER, THRUSTERS 4/5
      TRACER                        = BLANKS
      MESSAGE COUNT                 = 1
      END OF MESSAGE                = TRUE
      ROUTING ID                    = N/A
```

DATA BLOCK LAYOUT:

HALF-WORD NO.	MSB 0 1 2 3 4 5 6 7 8 9 10 11 12 13 14 15 LSB	
1	TOTAL NUMBER OF FIRINGS IN MANEUVER (K)	
2		
3	POST-MANEUVER	
4	YAW DIRA OFFSET BIAS	
5	SEQUENCE NUMBER OF THIS FIRING	
6		
7	PRE-FIRING	
8	YAW DIRA OFFSET BIAS	
9	YEAR	FIRING START TIME
10	DAY OF YEAR | HR (10s)	
11	HR (1s) | MINUTES | SEC (10s)	
12	SEC (1s) | MSECS	
13	FIRST ROLL THRUSTER ID	
14	SECOND ROLL THRUSTER ID	
15	FIRST PITCH THRUSTER ID	
16	SECOND PITCH THRUSTER ID	
17	FIRST YAW THRUSTER ID	
18	SECOND YAW THRUSTER ID	
19	PULSE TIME SCALE (RESOLUTION)	
20		
21	PULSE RANGE MULTIPLIER	
22		
23	SPARE	
24		

Message 56 – Stationkeeping CMD Parameters (GOES I-M) (2 of 2)

```
 HALF-
 WORD NO. MSB                                          LSB
          0  1  2  3  4  5  6  7  8  9 10 11 12 13 14 15
         |-----------------------------------------------|
         |         REPEAT WORDS 5 THRU 24 FOR            |
4+20(K)  |         THE REMAINING K-1 FIRINGS             |
         |-----------------------------------------------|
```

DATA ITEM	FORMAT	VALIDATION	UNITS
NUMBER OF FIRINGS	I*4	1-10	N/A
POST-MANEUVER YAW DIRA			
OFFSET BIAS	R*4	-2.0 TO +2.0	DEG
SEQUENCE NO. THIS FIRING	I*4	1-10	N/A
PRE-FIRING YAW DIRA			
OFFSET BIAS	R*4	-2.0 TO +2.0	DEG
FIRING START TIME YEAR	BCD	1989-2025	YEAR
DAY OF YEAR	BCD	1-366	DAY
HOUR	BCD	0-23	HOURS
MINUTES	BCD	0-59	MIN
SECONDS	BCD	0-59	SEC
N-SS	BCD	0-999	MSEC
FIRST ROLL THRUSTER ID	CHAR*2	6A, 6B, 7A, 7B	N/A
SECOND ROLL THRUSTER ID	CHAR*2	6A, 6B, 7A, 7B	N/A
FIRST PITCH THRUSTER ID	CHAR*2	4A, 4B, 5A, 5B	N/A
SECOND PITCH THRUSTER ID	CHAR*2	4A, 4B, 5A, 5B	N/A
FIRST YAW THRUSTER ID	CHAR*2	2A, 2B, 3A, 3B	N/A
SECOND YAW THRUSTER ID	CHAR*2	2A, 2B, 3A, 3B	N/A
PULSE TIME SCALE	I*4	5, 100, 5000	MSEC
PULSE RANGE MULTIPLIER	I*4	1-1023	N/A

Notes:

1. The message length depends on the number of thruster firings (*K*) and is given by 4 + 20*K*. The message length for 10 firings is 204 16-bit half-words.

2. GIMTACS can calculate the duration of the firing by multiplying the pulse time scale by the multiplier. OATS selects pulse time scales and multipliers to minimize the firing error.

Message 56 – Stationkeeping CMD Parameters (GOES N-P) (1 of 4)

OATS uses Message 56 to send computed stationkeeping maneuver thruster parameters to GTACS. The Message 56 data block layout and field definitions are as follows:

```
HEADER BLOCK FIELDS:
      MESSAGE SEQUENCE NO.     = 1-65535
      SATELLITE ID             = 13,14,15 (N-P)
      SOURCE                   = 75 – 85 (OATS)
      DESTINATION              = 90 – 101 (GTACS)
      NO. OF HALF-WORDS        = 58
      MESSAGE TYPE             = 56
      MESSAGE SUBTYPE          = 1 – N-S MANEUVER, THRUSTERS N1/N4
                               = 2 – N-S MANEUVER, THRUSTERS N2/N3
                               = 3 – E-W MANEUVER OR THRUSTER FLUSHING, OPEN-
                                     LOOP, ON-STATION, THRUSTERS E1/E2 OR W1/W2
                               = 4 – E-W MANEUVER OR THRUSTER FLUSHING, WHEEL
                                     CONTROL, STORAGE MODE, THRUSTERS E1/E2 OR
                                     W1/W2
                               = 5 – NORTH OR AXIAL THRUSTER FLUSHING,
                                     ON-STATION, THRUSTERS N1/N2/N3/N4,
                                     N1/N4, N2/N3, A1/A2/A3/A4, A1/A4, or
                                     A2/A3.
                               = 6 – NORTH OR AXIAL THRUSTER FLUSHING,
                                     STORAGE MODE, THRUSTERS N1/N2/N3/N4,
                                     N1/N4, N2/N3, A1/A2/A3/A4, A1/A4, or
                                     A2/A3.
                               = 7 - E-W STATION CHANGE MANEUVER, CLOSED-LOOP,
                                     ON-STATION
      TRACER                   = ASCII BLANKS
      MESSAGE COUNT            = 1
      END OF MESSAGE           = TRUE
      ROUTING ID               = N/A
```

DATA BLOCK LAYOUT:

HALF-WORD NO.	MSB 0 1 2 3 4 5 6 7 8 9 10 11 12 13 14 LSB 15
1 2	TOTAL NUMBER OF FIRINGS IN MANEUVER (K)
3 4	SOLAR ARRAY BIAS ENABLE
5 6	SOLAR ARRAY PAUSE ENABLE
7 8	SOLAR ARRAY BIAS COMMAND
9	CONSTANT LINEAR ACCELERATION – ORBIT X

Message 56 – Stationkeeping CMD Parameters (GOES N-P) (2 of 4)

HALF-WORD NO.	MSB 0 1 2 3 4 5 6 7 8 9 10 11 12 13 14 15 LSB		
10			
11 12	CONSTANT LINEAR ACCELERATION – ORBIT Y		
13 14	CONSTANT LINEAR ACCELERATION – ORBIT Z		
15 16	LATCH VALUE CONFIGURATION – A, B, D, OR E		
17 18	NS SK TRANSITION 2 SUBPHASE 1 DELTA-H – BODY X (ROLL)		
19 20	NS SK TRANSITION 2 SUBPHASE 1 DELTA-H – BODY Y (PITCH)		
21 22	NS SK TRANSITION 2 SUBPHASE 1 DELTA-H – BODY Z (YAW)		
23 24	NS SK TRANSITION 2 SUBPHASE 2 DELTA-H – BODY X		
25 26	NS SK TRANSITION 2 SUBPHASE 2 DELTA-H – BODY Y		
27 28	NS SK TRANSITION 2 SUBPHASE 2 DELTA-H – BODY Z		
29 30	NS SK TRANSITION 2 SUBPHASE 3 DELTA-H – BODY X		
31 32	NS SK TRANSITION 2 SUBPHASE 3 DELTA-H – BODY Y		
33 34	NS SK TRANSITION 2 SUBPHASE 3 DELTA-H – BODY Z		
35 36	JET # FOR NSSK DELTA-H SUBPHASE 1		
37 38	JET # FOR NSSK DELTA-H SUBPHASE 2		
39 40	JET # FOR NSSK DELTA-H SUBPHASE 3		
41 42	SEQUENCE NUMBER OF THIS FIRING		
43	YEAR		
44	DAY OF YEAR		HR(10s)
45	HR(1s)	MINUTES	SEC(10s)
46	SEC(1s)	MSECS	
47	FIRST THRUSTER ID		
48	SECOND THRUSTER ID		

Message 56 – Stationkeeping CMD Parameters (GOES N-P) (3 of 4)

HALF-WORD NO.	MSB 0 1 2 3 4 5 6 7 8 9 10 11 12 13 14 15 LSB
49	THIRD THRUSTER ID
50	FOURTH THRUSTER ID
51 52	NUMBER OF PULSES
53 54	PULSE WIDTH (SEC)
55 56	CYCLE DURATION (SEC)
57 58	OTS TABLE #
59	YAW BIAS

DATA ITEM	FORMAT	VALIDATION	UNITS
NUMBER OF FIRINGS	I*4	1	N/A
SOLAR ARRAY BIAS ENABLE	I*4	0-1	N/A
SOLAR ARRAY PAUSE ENABLE	I*4	0-1	N/A
SOLAR ARRAY BIAS COMMAND	R*4	-90.0 to +90.0	DEGREES
LINEAR ACCELERATION - ORBIT X	R*4	-0.05 to +0.05	M/S2
LINEAR ACCELERATION - ORBIT Y	R*4	-0.05 to +0.05	M/S2
LINEAR ACCELERATION - ORBIT Z	R*4	-0.05 to +0.05	M/S2
NS SK DELTA-H – BODY X	R*4	-72.0 to +72.0	NMS
NS SK DELTA-H – BODY Y	R*4	-72.0 to +72.0	NMS
NS SK DELTA-H – BODY Z	R*4	-72.0 to +72.0	NMS
JET # FOR NSSK DELTA-H	I*4	1 to 12	N/A
FIRING START TIME YEAR	BCD	1989 – 2025	YEAR
DAY OF YEAR	BCD	1 – 366	DAY
HOUR	BCD	0 – 23	HOUR
MINUTES	BCD	0 – 59	MIN
SECONDS	BCD	0 – 59	SECS
MILLISECONDS	BCD	0 – 999	MSECS
LATCH VALVE CONFIGURATION	CHAR*4	A, B, D, or E	N/A
FIRST THRUSTER ID	CHAR*2	N1, N2, A1, A2, E1, W1	N/A
SECOND THRUSTER ID	CHAR*2	N2, N3, N4, A2, A3, A4, E2, W2	N/A
THIRD THRUSTER ID	CHAR*2	Blank, N3, A3	N/A
FOURTH THRUSTER ID	CHAR*2	Blank, N4, A4	N/A
NUMBER OF PULSES	I*4	1 – 12000	N/A
PULSE WIDTH	R*4	0.05 – 7200.0	SEC
CYCLE DURATION	R*4	0.05 – 6000.0	SEC
OTS TABLE #	I*4	0-9	N/A
YAW BIAS	R*4	N/A	DEGREES

Message 56 – Stationkeeping CMD Parameters (GOES N-P) (4 of 4)

Notes:

1. For N-P, only one firing is allowed.
2. GTACS can calculate the Transition 1 duration of pulsed firing by multiplying the number of pulses by the cycle duration.
3. For N-S maneuvers, the Pulse Width and Cycle Duration are set to the total on-time (maneuver duration), since the burn is continuous.
4. The commanded thruster pulses do not include the autonomous attitude hold pulses.
5. The Solar Array Bias Enable is set to 1 (TRUE) if array biasing is needed due to thruster constraints, and set to 0 (FALSE) if not needed. The Solar Array Pause Enable is set to 1 (TRUE) if the array is biased and solar tracking is paused due to thruster constraints, and set to 0 (FALSE) if not needed.
6. The constant linear acceleration in orbit coordinates is only used for the N-S Maneuver and is calculated as the constant body acceleration that will best approximate an impulsive ECI Δv at the mid-time of the maneuver. The commanded thruster on-times are chosen so that the sum of the commanded and expected attitude-hold thrusting will produce the constant body acceleration. The x, y and z axes are defined as the orbital coordinate system where y = orbit angular momentum, z = toward Earth center, and x = y cross z. The linear acceleration fields will be zero when the message subtype is 3 through 6. The number of pulses must be 1 for message subtypes 1, 2 or 7.
7. During the Burn 1 phase of the NS maneuver, the s/c attempts to hold angular momentum constant so that the total H at the beginning of transition 2 is equal to the initial H + ΔH. The NS stationkeeping final ΔH in body coordinates is the change in angular momentum that will be applied in transition 2 phase at the end of stationkeeping mode. This is applied as for a normal momentum-dump, i.e., in three phases where only a single jet is fired in the each phase. The listed phase delta-h is the value generated by an integer number of thruster pulses based on the current S/C torque table. **Note: The delta-h values in Message 56 will be zero because OATS has not yet implemented this option.**
8. Validated for the maneuver subtype. The valid thruster IDs for the subtypes are:

Message Subtype	First Thruster IDs	Second Thruster IDs	Third Thruster IDs	Fourth Thruster IDs
1	N1	N4	-	-
2	N2	N3	-	-
3	E1	E2	-	-
	W1	W2		
4	E1	E2	-	-
	W1	W2		
5	N1	N2	N3	N4
	N1	N4		
	N2	N3		
	A1	A2	A3	A4
	A1	A4		
	A2	A3		
6	N1	N2	N3	N4
	N1	N4		
	N2	N3		
	A1	A2	A3	A4
	A1	A4		
	A2	A3		
7	E1	E2		
	W1	W2		

9. The E-W maneuver transition 2 phase requires approximately the same time as transition 1 phase to remove the momentum added to the system from transition 1 phase. Since the total maneuver time for E-W SK and thruster flushing must be less than 6 minutes, a minimum of three minutes must be reserved for transition 2 phase. Assuming a fractional on-time of 0.40, the maximum maneuver on-time for E-W SK and thruster flushing transition 1 phase is 69.9 seconds.
10. The latch valve configuration is selected by the OATS operator to balance tank usage. The four configurations are defined as: A= Fuel 1, Oxidizer 2; B = Fuel 2, Oxidizer 1; D = Fuel 1, Oxidizer 1; or E = Fuel 2, Oxidizer 2.

Message 57 – Momentum Dump Command (GOES N-P) (1 of 2)

OATS uses Message 57 to send computed momentum-dumping maneuver momentum change parameters to GTACS. The Message 57 data block layout and field definitions are as follows:

```
HEADER BLOCK FIELDS:
      MESSAGE SEQUENCE NO.     = 1-65535
      SATELLITE ID             = 13,14,15 (N-P)
      SOURCE                   = 75 - 85 (OATS)
      DESTINATION              = 90 - 101 (GTACS)
      NO. OF HALF-WORDS        = 34
      MESSAGE TYPE             = 57
      MESSAGE SUBTYPE          = 0
      TRACER                   = ASCII BLANKS
      MESSAGE COUNT            = 1
      END OF MESSAGE           = TRUE
      ROUTING ID               = N/A
```

DATA BLOCK LAYOUT:

HALF-WORD NO.	MSB 0	1	2	3	4	5	6	7	8	9	10	11	12	13	14	LSB 15
1	YEAR															
2		DAY OF YEAR											HR(10s)			
3	HR(1s)				MINUTES								SEC(10s)			
4	SEC(1s)				MSECS											
5	TOTAL NUMBER OF TRANSITION 2 SUBPHASES (1-3)															
6																
7	LATCH VALVE CONFIGURATION – A,B,D, OR E															
8																
9	SPARE															
10																
11	SUBPHASE 1 THRUSTERS: 0=NONE, 1=N1-4, OR 2=A1-4															
12																
13	SUBPHASE 1 BODY MOMENTUM CHANGE - ROLL															
14																
15	SUBPHASE 1 BODY MOMENTUM CHANGE - PITCH															
16																
17	SUBPHASE 1 BODY MOMENTUM CHANGE - YAW															
18																
19	SUBPHASE 2 THRUSTERS 0=NONE, 1=N1-4, OR 2=A1-4															
20																
21	SUBPHASE 2 BODY MOMENTUM CHANGE - ROLL															
22																

Message 57 – Momentum Dump Command (GOES N-P) (2 of 2)

HALF-WORD NO.	MSB 0 1 2 3 4 5 6 7 8 9 10 11 12 13 14 15 LSB
23 24	SUBPHASE 2 BODY MOMENTUM CHANGE - PITCH
25 26	SUBPHASE 2 BODY MOMENTUM CHANGE - YAW
27 28	SUBPHASE 3 THRUSTERS 0=NONE, 1=N1-4, OR 2=A1-4
29 30	SUBPHASE 3 BODY MOMENTUM CHANGE - ROLL
31 32	SUBPHASE 3 BODY MOMENTUM CHANGE - PITCH
33 34	SUBPHASE 3 BODY MOMENTUM CHANGE - YAW

DATA ITEM	FORMAT	VALIDATION	UNITS
YEAR	BCD	1989-2025	YEAR
DAY OF YEAR	BCD	1-366	DAY
HOUR	BCD	0-23	HOUR
MINUTES	BCD	0-59	MIN
SECONDS	BCD	0-59	SECS
MSECS	BCD	0-999	MSECS
TOTAL NUMBER OF TRANSITION 2 SUBPHASES	I*4	1-3	N/A
LATCH VALVE CONFIGURATION – A, B, D OR E	CHAR*4	A, B, D, or E	N/A
SUBPHASE THRUSTERS	I*4	0-2	N/A
SUBPHASE BODY MOMENTUM CHANGE – ROLL	R*4	-72 to +72	Nms
SUBPHASE BODY MOMENTUM CHANGE – PITCH	R*4	-72 to +72	Nms
SUBPHASE BODY MOMENTUM CHANGE – YAW	R*4	-72 to +72	Nms

Notes:

1. The subphase durations are calculated from the commanded momentum changes. The sum of the magnitudes of the commanded momentum changes must be less than 71 Nms in order to not violate the 6-minute transition 2 subphase limit.

2. Validation of the maneuver duration is performed as part of the momentum-dump planning process. Hence the magnitude validation is simply 72 Nms.

3. The roll, pitch and yaw body axes are defined in the S/C body coordinate system.

4. The latch valve configuration is selected by the OATS operator to balance tank usage. The four configurations are defined as A = Fuel 1, Oxidizer 2; B = Fuel 2, Oxidizer 1; D = Fuel 1, Oxidizer 1; or E = Fuel 2, Oxidizer 2.

Message 58 – Trim Tab Command Parameters (GOES I-M)

On a daily basis, OATS sends GIMTACS a Message 58 containing the information necessary to command the trim tab. Message 58 is unsolicited on the assumption that the trim tab calculation function in OATS runs at approximately the same time each day, and that provision is made for this command in the daily schedule. The Message 58 data block layout and field definitions follow.

```
HEADER BLOCK FIELDS:
      MESSAGE SEQUENCE NO.          = 1-65535
      SATELLITE ID                  = 8,9,10,11,12 (I-M)
      SOURCE                        = 41,42,43,44,45,46,47,48,49,50 (OATS)
      DESTINATION                   = 10 (GIMTACS)
      NO. OF HALF-WORDS             = 12
      MESSAGE TYPE                  = 58
      MESSAGE SUBTYPE               = 0
      TRACER                        = BLANKS
      MESSAGE COUNT                 = 1
      END OF MESSAGE                = TRUE
      ROUTING ID                    = N/A

DATA BLOCK LAYOUT:
 HALF-
 WORD NO. MSB                                          LSB
           0  1  2  3  4  5  6  7  8  9 10 11 12 13 14 15
         |-----------------------------------------------|-
      1  |                      YEAR                     | | TRIM
         |-----------------------------------------------| | TAB
      2  |  |         DAY OF YEAR            |  HR (10s) | | COMMAND
         |-----------------------------------------------| | START
      3  |  HR (1s)  |        MINUTES         |  SEC (10s)| | TIME
         |-----------------------------------------------| |
      4  |  SEC (1s) |               MSECS                | |
         |-----------------------------------------------|-
      5  |           TRIM TAB COMMAND DIRECTION           |
      6  |
         |-----------------------------------------------|
      7  |           TRIM TAB COMMAND DURATION            |
      8  |
         |-----------------------------------------------|
      9  |              TRIM TAB SLEW RATE                |
     10  |
         |-----------------------------------------------|
     11  |             TARGET TRIM TAB ANGLE              |
     12  |-----------------------------------------------|
```

DATA ITEM	FORMAT	VALIDATION	UNITS
TRIM TAB CMD START TIME YEAR	BCD	1989-2025	YEAR
DAY OF YEAR	BCD	1-366	DAY
HOUR	BCD	0-23	HOURS
MINUTES	BCD	0-59	MIN
SECONDS	BCD	0-59	SEC
MSEC	BCD	0-999	MSEC
TRIM TAB COMMAND DIRECTION	I*4	1 - FWD 2 - RVS	N/A
TRIM TAB COMMAND DURATION	I*4	0-6000	MSEC
TRIM TAB SLEW RATE	I*4	0 - LOW 1 - HI	N/A
TARGET TRIM TAB ANGLE	R*4	-180 TO +24	DEG

Message 59 – Eclipse Prediction Response (1 of 2)

In response to a Message 159 from GIMTACS/GTACS, OATS sends a Message 59 containing eclipse entrance and exit time predictions. Message 59 provides for two types of eclipses of the satellite, which are shadowing by the Earth and shadowing by the Moon. Both umbral and penumbral entrance and exit times are provided. The Message 59 data block layout and field definitions follow.

```
HEADER BLOCK FIELDS:
      MESSAGE SEQUENCE NO.          = 1-65535
      SATELLITE ID                  = 8,9,10,11,12,13,14,15 (I-P)
      SOURCE                        = 41,42,43,44,45,46,47,48,49,50 (I-M OATS)
                                    = 75-85 (N-P OATS)
      DESTINATION                   = 10 (GIMTACS)
                                    = 90-101 (GTACS)
      NO. OF HALF-WORDS             = UP TO 204 (SEE NOTES)
      MESSAGE TYPE                  = 59
      MESSAGE SUBTYPE               = 0
      TRACER                        = ASCII BLANKS
      MESSAGE COUNT                 = 1
      END OF MESSAGE                = TRUE
      ROUTING ID                    = AS PROVIDED IN MSG 159

DATA BLOCK LAYOUT:
 HALF-
 WORD NO. MSB                                          LSB
          0  1  2  3  4  5  6  7  8  9 10 11 12 13 14 15
        |-----------------------------------------------|
      1 |           NUMBER OF ECLIPSE EVENTS (N)        |
      2 |
        |-----------------------------------------------|
      3 |               ECLIPSE STATUS FLAG             |
      4 |
        |-----------------------------------------------|
      5 |                 INTRUDING BODY                |
      6 |
        |-----------------------------------------------|
      7 |                     SPARE                     |
      8 |
        |-----------------------------------------------|_
      9 |                     YEAR                      | |
        |-----------------------------------------------| |
     10 |  |         DAY OF YEAR            |  HR (10s) | | PENUMBRAL
        |-----------------------------------------------| | ENTRANCE
     11 |  HR (1s)  |        MINUTES         |  SEC (10s)| | TIME
        |-----------------------------------------------| |
     12 |  SEC (1s) |               MSECS               |_|
        |-----------------------------------------------|_
     13 |                     YEAR                      | |
        |-----------------------------------------------| |
     14 |  |         DAY OF YEAR            |  HR (10s) | | UMBRAL
        |-----------------------------------------------| | ENTRANCE
     15 |  HR (1s)  |        MINUTES         |  SEC (10s)| | TIME
        |-----------------------------------------------| |
     16 |  SEC (1s) |               MSECS               |_|
        |-----------------------------------------------|_
```

Message 59 – Eclipse Prediction Response (2 of 2)

```
HALF-
WORD NO. MSB                                          LSB
         0  1  2  3  4  5  6  7  8  9 10 11 12 13 14 15
        |-----------------------------------------------|
    17  |                     YEAR                      |
        |-----------------------------------------------|
    18  |  |         DAY OF YEAR            |  HR (10s)  |   UMBRAL
        |-----------------------------------------------|   EXIT
    19  |  HR (1s)  |        MINUTES         |  SEC (10s) |   TIME
        |-----------------------------------------------|
    20  |  SEC (1s) |              MSECS                 |
        |-----------------------------------------------|
    21  |                     YEAR                      |
        |-----------------------------------------------|
    22  |  |         DAY OF YEAR            |  HR (10s)  |   PENUMBRAL
        |-----------------------------------------------|   EXIT
    23  |  HR (1s)  |        MINUTES         |  SEC (10s) |   TIME
        |-----------------------------------------------|
    24  |  SEC (1s) |              MSECS                 |
        |-----------------------------------------------|
    25  |         ADDITIONAL BODY IDENTIFIERS,           |
        |            ENTRANCE AND EXIT TIMES             |
 20N+4  |                                                |
        |-----------------------------------------------|
```

DATA ITEM	FORMAT	VALIDATION	UNITS
NUMBER OF ECLIPSE EVENTS	I*4	0-10	N/A
ECLIPSE STATUS FLAG	I*4	-2, -1, 0 (SEE NOTES)	N/A
INTRUDING BODY	I*4	1 - EARTH 2 - MOON	N/A
ENTRANCE/EXIT TIME YEAR	BCD	1989-2025	YEAR
DAY OF YEAR	BCD	1-366	DAY
HOUR	BCD	0-23	HOURS
MINUTES	BCD	0-59	MIN
SECONDS	BCD	0-59	SEC
MSEC	BCD	0-999	MSEC

Notes:

1. The following are eclipse status flags:

   -2 Unable to respond to a request outside the bounds of operational support, number of events equals zero.
   -1 Request extends beyond range of operational support. Any events in requested range and in range of operational support are given.
   0 Request within range of operational support. All events in requested range are given.

2. Half-words 5 through 24 are repeated for each eclipse event as required. The maximum message length is given by 20*N* + 4, or 204 half-words when *N* = 10.

3. This message supports up to 10 days of eclipse prediction responses.

Message 60 – Sensor Intrusion Response (GOES I-M) (1 of 3)

In response to a Message 160 from GIMTACS, OATS furnishes Sun and Moon intrusion predictions for the North and South Earth sensors, the Imager East and West FOV edges, the Sounder East and West FOV edges, and CDAS antenna RF interference (Sun only). The Message 60 data block layout and field definitions follow.

```
HEADER BLOCK FIELDS:
      MESSAGE SEQUENCE NO.          = 1-65535
      SATELLITE ID                  = 8,9,10,11,12 (I-M)
      SOURCE                        = 41,42,43,44,45,46,47,48,49,50 (OATS)
      DESTINATION                   = 10 (GIMTACS)
      NO. OF HALF-WORDS             = UP TO 496 (SEE NOTES)
      MESSAGE TYPE                  = 60
      MESSAGE SUBTYPE               = 0
      TRACER                        = BLANKS
      MESSAGE COUNT                 = 1
      END OF MESSAGE                = TRUE
      ROUTING ID                    = AS PROVIDED IN MSG 160
DATA BLOCK LAYOUT:
 HALF-
 WORD NO. MSB                                          LSB
          0  1  2  3  4  5  6  7  8  9 10 11 12 13 14 15
        |-----------------------------------------------|
      1 |       NUMBER OF EARTH SENSOR INTRUSIONS (J)   |
      2 |
        |-----------------------------------------------|
      3 |          EARTH SENSOR STATUS FLAG             |
      4 |
        |-----------------------------------------------|
      5 |                 INTRUDING BODY                |
      6 |
        |-----------------------------------------------|
      7 |                EARTH SENSOR ID                |
      8 |
        |-----------------------------------------------|—
      9 |                     YEAR                      | | EARTH
        |-----------------------------------------------| | SENSOR
     10 |  |         DAY OF YEAR            |  HR (10s) | | SINGLE
        |-----------------------------------------------| | CHORD OP
     11 |  HR (1s)  |        MINUTES         |  SEC (10s)| | START
        |-----------------------------------------------| | TIME
     12 |  SEC (1s) |               MSECS               |
        |-----------------------------------------------|—
     13 |                     YEAR                      | | EARTH
        |-----------------------------------------------| | SENSOR
     14 |  |         DAY OF YEAR            |  HR (10s) | | SINGLE
        |-----------------------------------------------| | CHORD OP
     15 |  HR (1s)  |        MINUTES         |  SEC (10s)| | STOP
        |-----------------------------------------------| | TIME
     16 |  SEC (1s) |               MSECS               |
        |-----------------------------------------------|—
     17 |         NUMBER OF IMAGER INTRUSIONS (K)       |
     18 |
        |-----------------------------------------------|
     19 |         IMAGER INTRUSION STATUS FLAG          |
     20 |
        |-----------------------------------------------|
     21 |                  INTRUDING BODY               |
     22 |
        |-----------------------------------------------|
     23 |               EAST OR WEST EDGE ID            |
     24 |
        |-----------------------------------------------|
```

Message 60 - Sensor Intrusion Response (2 of 3)

HALF-WORD NO.	MSB 0 1 2 3 4 5 6 7	8 9 10 11 12 13 14 15 LSB	
25	YEAR		IMAGER INTRUSION START TIME
26	DAY OF YEAR	HR (10s)	
27	HR (1s) MINUTES	SEC (10s)	
28	SEC (1s) MSECS		
29	YEAR		IMAGER INTRUSION STOP TIME
30	DAY OF YEAR	HR (10s)	
31	HR (1s) MINUTES	SEC (10s)	
32	SEC (1s) MSECS		
33	NUMBER OF SOUNDER INTRUSIONS (L)		
34			
35	SOUNDER INTRUSION STATUS FLAG		
36			
37	INTRUDING BODY		
38			
39	EAST OR WEST EDGE ID		
40			
41	YEAR		SOUNDER INTRUSION START TIME
42	DAY OF YEAR	HR (10s)	
43	HR (1s) MINUTES	SEC (10s)	
44	SEC (1s) MSECS		
45	YEAR		SOUNDER INTRUSION STOP TIME
46	DAY OF YEAR	HR (10s)	
47	HR (1s) MINUTES	SEC (10s)	
48	SEC (1s) MSECS		
49	NUMBER OF SUN IN STATION ANTENNA		
50	FOV INTRUSIONS (N)		
51	SUN INTRUSION STATUS FLAG		
52			
53	ANTENNA ID		
54			
55	SPARE		
56			
57	YEAR		SUN IN STATION ANTENNA INTRUSION START TIME
58	DAY OF YEAR	HR (10s)	
59	HR (1s) MINUTES	SEC (10s)	
60	SEC (1s) MSECS		

Message 60 - Sensor Intrusion Response (3 of 3)

```
HALF-
WORD NO. MSB                                          LSB
         0  1  2  3  4  5  6  7  8  9 10 11 12 13 14 15
        |-----------------------------------------------|
    61  |                   YEAR                        |
        |-----------------------------------------------|
    62  |  |        DAY OF YEAR            |  HR (10s)  |
        |-----------------------------------------------|
    63  |  HR (1s)  |       MINUTES         |  SEC (10s) |
        |-----------------------------------------------|
    64  |  SEC (1s) |                 MSECS               |
        |-----------------------------------------------|
```

SUN IN STATION ANTENNA INTRUSION STOP TIME

DATA ITEM	FORMAT	VALIDATION	UNITS
NO. OF EARTH SENSOR INTRSNS	I*4	0-10	N/A
EARTH SENSOR STATUS FLAG	I*4	-2, -1, 0	N/A
INTRUDING BODY	I*4	1 - SUN 2 - MOON	N/A
EARTH SENSOR ID	I*4	1 - NORTH 2 - SOUTH	N/A
INTRUSION TIMES YEAR	BCD	1989-2025	YEAR
DAY	BCD	1-366	DAY
HOUR	BCD	0-23	HOURS
MINUTES	BCD	0-59	MIN
SECONDS	BCD	0-59	SEC
MSEC	BCD	0-999	MSEC
NO. OF IMAGER INTRUSIONS	I*4	0-10	N/A
IM INTRUSIONS STATUS FLAG	I*4	-2, -1, 0	N/A
INTRUDING BODY	I*4	1 - SUN 2 - MOON	N/A
E-W EDGE ID	I*4	1 - EAST 2 - WEST	N/A
NO. OF SOUNDER INTRUSIONS	I*4	0-10	N/A
SDR INTRUSIONS STATUS FLAG	I*4	-2, -1, 0	N/A
INTRUDING BODY	I*4	1 - SUN 2 - MOON	N/A
E-W EDGE ID	I*4	1 - EAST 2 - WEST	N/A
NO. OF SUN INTRUSIONS INTO ANTENNA	I*4	0-10	N/A
SUN INTRUSIONS STATUS FLAG	I*4	-2, -1, 0	N/A
ANTENNA ID	I*4	1-20	N/A

Notes:

1. The following are status flags:
   - -2 Unable to respond to a request outside the bounds of operational support.
   - -1 Request extends beyond range of operational support. Any events in requested range and in range of operational support are given.
   - 0 Request within range of operational support. All events in requested range are given.
   - N Events in request span, where *N* may be 1 through 10.
2. Half-words 5 through 16 are repeated for each Earth sensor intrusion event *J*.
3. Half-words 21 through 32 are repeated for each Imager intrusion event K.
4. Half-words 37 through 48 are repeated for each Sounder intrusion L.
5. Half-words 53 through 64 are repeated for each station antenna FOV intrusion event N.
6. The message length will vary with the total number of events of the four types. The message length is determined using the equation 16 + 12J + 12K + 12L + 12N, with a maximum length of 496, 16-bit half-words when J = K = L = N = 10.
7. Earth sensor single-chord operation start and stop times include OATS database-specified boundary considerations.

Message 60-1 – Sensor and Frame Intrusion Response (GOES N-P) (1 of 3)

In response to a Message 160 Subtype 1 from GTACS, OATS furnishes Sun and Moon intrusion predictions for the Imager East and West FOV edges, the Sounder East and West FOV edges, and CDAS antenna RF interference (Sun only). The Message 60 Subtype 1 data block layout and field definitions are as follows:

```
HEADER BLOCK FIELDS:
      MESSAGE SEQUENCE NO.          = 1-65535
      SATELLITE ID                  = 13,14,15 (N-P)
      SOURCE                        = 75 - 85 (OATS)
      DESTINATION                   = 90 - 101 (GTACS)
      NO. OF HALF-WORDS             = UP TO 732 (SEE NOTES)
      MESSAGE TYPE                  = 60
      MESSAGE SUBTYPE               = 1
      TRACER                        = ASCII BLANKS
      MESSAGE COUNT                 = 1
      END OF MESSAGE                = TRUE
      ROUTING ID                    = N/A (used internally by OATS)
```

DATA BLOCK LAYOUT:

HALF-WORD NO.	MSB 0	1	2	3	4	5	6	7	8	9	10	11	12	13	14	LSB 15	
1	NUMBER OF IMAGER INTRUSIONS (K)																
2																	
3	IMAGER INSTRUSION STATUS FLAG																
4																	
5	INTRUDING BODY																
6																	
7	EAST OR WEST EDGE ID																
8																	
9	YEAR																IMAGER INTRUSION START TIME
10		DAY OF YEAR													HR(10s)		
11	HR(1s)				MINUTES										SEC(10s)		
12	SEC(1s)				MSECS												
13	YEAR																IMAGER INTRUSION STOP TIME
14		DAY OF YEAR													HR(10s)		
15	HR(1s)				MINUTES										SEC(10s)		
16	SEC(1s)				MSECS												
17	NUMBER OF SOUNDER INTRUSIONS (L)																
18																	

Message 60-1 – Sensor and Frame Intrusion Response (GOES N-P) (2 of 3)

HALF-WORD NO.	MSB 0	1	2	3	4	5	6	7	8	9	10	11	12	13	14	LSB 15	
19	SOUNDER INTRUSION STATUS FLAG																
20																	
21	INTRUDING BODY																
22																	
23	EAST OR WEST EDGE ID																
24																	
25	YEAR																SOUNDER INTRUSION START TIME
26		DAY OF YEAR												HR(10s)			
27	HR(1s)				MINUTES									SEC(10s)			
28	SEC(1s)				MSECS												
29	YEAR																SOUNDER INTRUSION STOP TIME
30		DAY OF YEAR												HR(10s)			
31	HR(1s)				MINUTES									SEC(10s)			
32	SEC(1s)				MSECS												
33	NUMBER OF SUN IN STATION ANTENNA FOV INTRUSIONS (N)																
34																	
35	SUN INSTRUSION STATUS FLAG																
36																	
37	ANTENNA ID																
38																	
39	SPARE																
40																	
41	YEAR																SUN IN STATION ANTENNA INTRUSION START TIME
42		DAY OF YEAR												HR(10s)			
43	HR(1s)				MINUTES									SEC(10s)			
44	SEC(1s)				MSECS												
45	YEAR																SUN IN STATION ANTENNA INTRUSION STOP TIME
46		DAY OF YEAR												HR(10s)			
47	HR(1s)				MINUTES									SEC(10s)			
48	SEC(1s)				MSECS												

Message 60-1 – Sensor and Frame Intrusion Response (GOES N-P) (3 of 3)

DATA ITEM	FORMAT	VALIDATION	UNITS
INTRUDING BODY	I*4	1 = SUN 2 = MOON	N/A
INTRUSION TIMES YEAR	BCD	1989-2025	YEAR
DAY OF YEAR	BCD	1-366	DAY
HOUR	BCD	0-23	HOUR
MINUTES	BCD	0-59	MIN
SECONDS	BCD	0-59	SECS
MILLISECONDS	BCD	0-999	MSECS
NO. OF IMAGER INTRUSIONS	I*4	0-20	N/A
IM INTRUSIONS STATUS FLAG	I*4	-2, -1, 0	N/A
INTRUDING BODY	I*4	1 = SUN 2 = MOON	N/A
EAST OR WEST EDGE ID	I*4	1 = EAST 2 = WEST	N/A
NO. OF SOUNDER INTRUSIONS	I*4	0-20	N/A
SDR INTRUSIONS STATUS FLAG	I*4	-2, -1, 0	N/A
INTRUDING BODY	I*4	1 = SUN 2 = MOON	N/A
EAST OR WEST EDGE ID	I*4	1 = EAST 2 = WEST	N/A
NO. OF SUN INTRUSIONS INTO ANTENNA	I*4	0-20	N/A
SUN INTRUSIONS STATUS FLAG	I*4	-2, -1, 0	N/A
ANTENNA ID	I*4	1-20	N/A

Notes:

1. All status flags:
   -2: Unable to respond to a request outside the bounds of operational support.
   -1: Request extends beyond range of operational support. Any events in requested range and in range of operational support are given.
   0: Request within range of operational support. All events in requested range are given.
2. Half-words 5-16 are repeated for each Imager intrusion event K.
3. Half-words 21-32 are repeated for each Sounder intrusion L.
4. Half-words 37-48 are repeated for each station antenna FOV intrusion event N.
5. The message length, therefore, will vary with the total number of events of the three types.
   The message length is given by: 12 + 12K + 12L + 12N, with a maximum length of 732 16-bit half-words when K = L = N = 20.
6. This message supports up to 10 days of intrusion predictions.

Message 60-2 – Sensor and Frame Intrusion Prediction Response (GOES N-P) (1 of 2)

In response to a Message 160 Subtype 2 from GTACS, OATS furnishes Sun intrusion predictions for a set of pre-defined frames. The Message 60 Subtype 2 data block layout and field definitions are as follows:

```
HEADER BLOCK FIELDS:
      MESSAGE SEQUENCE NO.          = 1-65535
      SATELLITE ID                  = 13,14,15 (N-P)
      SOURCE                        = 75 - 85 (OATS)
      DESTINATION                   = 90 - 101 (GTACS)
      NO. OF HALF-WORDS             = UP TO 1776 (SEE NOTES)
      MESSAGE TYPE                  = 60
      MESSAGE SUBTYPE               = 2
      TRACER                        = ASCII BLANKS
      MESSAGE COUNT                 = 1-10
      END OF MESSAGE                = FALSE/TRUE
      ROUTING ID                    = N/A (used internally by OATS)
```

DATA BLOCK LAYOUT:

HALF-WORD NO.	MSB 0 1 2 3 4 5 6 7 8 9 10 11 12 13 14 LSB 15
1	NUMBER OF REMAINING FRAMES
2	
3	NUMBER OF FRAMES IN THIS MESSAGE (K)
4	
5	FRAME NAME
6	
7	
8	
9	
10	
11	
12	
13	
14	
15	
16	
17	
18	
19	
20	

Message 60-2 – Sensor and Frame Intrusion Prediction Response (GOES N-P) (2 of 2)

HALF-WORD NO.	MSB 0 1 2 3 4 5 6 7	8 9 10 11	12 13 14 LSB 15	
21	INTRUSION STATUS FLAG			
22	FOR THIS FRAME			
23	NUMBER OF INTRUSIONS			
24	FOR THIS FRAME (N)			
25	YEAR			FRAME INTRUSION START TIME
26	DAY OF YEAR		HR(10s)	
27	HR(1s)	MINUTES	SEC(10s)	
28	SEC(1s)	MSECS		
29	YEAR			FRAME INTRUSION STOP TIME
30	DAY OF YEAR		HR(10s)	
31	HR(1s)	MINUTES	SEC(10s)	
32	SEC(1s)	MSECS		
33				
34				
.				
.				
.				

DATA ITEM	FORMAT	VALIDATION	UNITS
NUMBER OF REMAINING FRAMES	I*4	1-20	N/A
NUMBER OF FRAMES IN THIS MESSAGE (K)	I*4	1-20	N/A
FRAME NAME	ASCII	N/A	N/A
INTRUSIONS STATUS FLAG	I*4	-2, -1, 0	N/A
NUMBER OF INTRUSIONS (N)	I*4	0-90	N/A
INTRUSION TIMES YEAR	BCD	1989-2025	YEAR
DAY OF YEAR	BCD	1-366	DAY
HOUR	BCD	0-23	HOUR
MINUTES	BCD	0-59	MIN
SECONDS	BCD	0-59	SECS
MILLISECONDS	BCD	0-999	MSECS

Notes:

1. Status flag:
   - -2: No intrusions in requested time span.
   - -1: Intrusions exist outside of requested time span. Any intrusion in requested range is given.
   - 0: All intrusions lie within the requested time span. Any intrusion in requested range is given.
2. NUMBER OF REMAINING FRAMES includes the frames in this message. As many messages as are necessary will be sent. No frame will have its data split over two messages. In the last message, the NUMBER OF REMAINING FRAMES will be the same as the NUMBER OF FRAMES IN THIS MESSAGE.
3. Half-words 5-8*N+24 are repeated for each frame in message K.
4. Half-words 25-32 are repeated for each Frame intrusion N. N may be different for different frames.
5. OATS has storage for 20 frames for 90 days. A maximum of 10 messages would be necessary to send all the data. If requests are limited to 10 days duration, the currently defined 10 frames will all be contained in one message.

Message 61 – DIRA Drift Command (GOES I-M)

After running the DIRA calibration process and before a stationkeeping maneuver, OATS sends Message 61 to GIMTACS. This message contains no command times. It is intended to be part of a stationkeeping maneuver command sequence, and the commands associated with this message should be sent just prior to sending the actual thruster commands. The Message 61 data block layout and field definitions follow.

```
HEADER BLOCK FIELDS:
      MESSAGE SEQUENCE NO.          = 1-65535
      SATELLITE ID                  = 8,9,10,11,12 (I-M)
      SOURCE                        = 41,42,43,44,45,46,47,48,49,50 (OATS)
      DESTINATION                   = 10 (GIMTACS)
      NO. OF HALF-WORDS             = 6
      MESSAGE TYPE                  = 61
      MESSAGE SUBTYPE               = 0
      TRACER                        = BLANKS
      MESSAGE COUNT                 = 1
      END OF MESSAGE                = TRUE
      ROUTING ID                    = N/A

DATA BLOCK LAYOUT:
 HALF-
 WORD NO. MSB                                          LSB
           0  1  2  3  4  5  6  7  8  9 10 11 12 13 14 15
          |-----------------------------------------------|
       1  |       ROLL DIRA DRIFT RATE COMMAND BIAS       |
       2  |                                               |
          |-----------------------------------------------|
       3  |      PITCH DIRA DRIFT RATE COMMAND BIAS       |
       4  |                                               |
          |-----------------------------------------------|
       5  |       YAW DIRA DRIFT RATE COMMAND BIAS        |
       6  |                                               |
          |-----------------------------------------------|
```

DATA ITEM	FORMAT	VALIDATION	UNITS
ROLL DIRA DRIFT RATE BIAS	R*4	-15 TO +15	DEG/HR
PITCH DIRA DRIFT RATE BIAS	R*4	-15 TO +15	DEG/HR
YAW DIRA DRIFT RATE BIAS	R*4	-15 TO +15	DEG/HR

Notes:

1. No commanding time is associated with this command. It should be sent just before the associated stationkeeping maneuver command as part of the maneuver preparation.

2. The DIRA drift rate command bias in degrees per hour is what should be commanded to the spacecraft. This bias equals the negative of the DIRA drift rate.

Message 62 – IMC, SMC, or SCC Set Ready (GOES I-M) (1 of 2)

OATS sends GIMTACS an unsolicited Message 62 after generating a new IMC, SMC, or SCC coefficient set. In general, Message 62 is sent on a daily basis. However, when dealing with Earth sensor single chord operation, Shenk clouds, radiance gradients, or magnetic storms, the message may be sent more often. The Message 62 data block layout and field definitions follow.

```
HEADER BLOCK FIELDS:
      MESSAGE SEQUENCE NO.          = 1-65535
      SATELLITE ID                  = 8,9,10,11,12 (I-M)
      SOURCE                        = 41,42,43,44,45,46,47,48,49,50 (OATS)
      DESTINATION                   = 10 (GIMTACS)
      NO. OF HALF-WORDS             = 14
      MESSAGE TYPE                  = 62
      MESSAGE SUBTYPE               = 1 - NORMAL SET
                                    = 2 - REQUESTED PREVIOUSLY
                                          ENABLED SET
                                    = 101 - SMC SET
                                    = 102 - SCC SET
      TRACER                        = BLANKS
      MESSAGE COUNT                 = 1
      END OF MESSAGE                = TRUE
      ROUTING ID                    = N/A
```

DATA BLOCK LAYOUT:

```
 HALF-
 WORD NO. MSB                                          LSB
           0  1  2  3  4  5  6  7  8  9 10 11 12 13 14 15
          |-----------------------------------------------|
       1  |          IMC, SMC, or SCC SET IDENTIFIER      |
       2  |
          |-----------------------------------------------|
       3  |                 SSAA USAGE FLAG               |
       4  |
          |-----------------------------------------------|
       5  |                      SPARE                    |
       8  |
          |-----------------------------------------------|_
       9  |                      YEAR                     | |
          |-----------------------------------------------| |
      10  |  |         DAY OF YEAR            |  HR (10s) | | IMC SET
          |-----------------------------------------------| | EPOCH
      11  |  HR (1s)  |        MINUTES         |  SEC (10s)| | DATE
          |-----------------------------------------------| |
      12  |  SEC (1s) |               MSECS                | |
          |-----------------------------------------------|_
      13  |            IMC/SMC/SCC SET SUBTYPE             |
      14  |
          |-----------------------------------------------|
```

DATA ITEM	FORMAT	VALIDATION	UNITS
IMC/SMC/SCC SET ID	ASCII	ANNN FOR IMC	N/A
		NNNA FOR SMC	N/A
		NNNC FOR SCC	N/A
SSAA USAGE FLAG	I*4	0 - NOT A REACTIVE SET	N/A
		1 - BOTH IMC & STAR SENSE DELTA	
		2 - IMC ONLY	
		3 - STAR SENSE DEL ONLY	
EPOCH DATE YEAR	BCD	1989-2025	YEAR
DAY OF YEAR	BCD	1-366	DAY

Message 62 - IMC, SMC, or SCC Set Ready (2 of 2)

DATA ITEM	FORMAT	VALIDATION	UNITS
HOUR	BCD	0-23	HOURS
MINUTES	BCD	0-59	MIN
SECONDS	BCD	0-59	SEC
MSEC	BCD	0-999	MSEC
IMC/SMC/SCC SET SUBTYPE	I*4	1 - FULL SET (24 HR)	N/A
		2 - NEW ORBIT REF. SET	
		3 - SSAA, COUPLED IM/SDR	
		4 - SSAA, UNCOUPLED IM/SDR	
		5 - POST-SK FULL SET	
		6 – SSO&A ADJUST	
		101 - SMC SET	
		102 - SCC SET	

Notes:

1. If the IMC set subtype is 1, the entire O&A prediction products have been updated. GIMTACS should request eclipse times, intrusion events, and star sighting commands.

2. A Subtype 101 indicates an SMC coefficients set, which is normally sent daily during the summer and winter seasons (valid only for I-M).

3. A Subtype 102 indicates an SCC coefficients set, which is sent at random times during the year. An analyst determines the timing of this message by looking at the times of single chord operation and the magnitude of changes from the current set (valid only for I-M).

Message 62 – IMC Set Ready (GOES N-P) (1 of 2)

OATS sends GTACS a Message 62 after generating a new IMC coefficient set. In general, Message 62 is sent in response to a Message 162. However, the message may be unsolicited after an SSAA. The Message 62 data block layout and field definitions are as follows:

```
HEADER BLOCK FIELDS:
      MESSAGE SEQUENCE NO.          = 1-65535
      SATELLITE ID                  = 13,14,15 (N-P)
      SOURCE                        = 75 - 85 (OATS)
      DESTINATION                   = 90 - 101 (GTACS)
      NO. OF HALF-WORDS             = 8
      MESSAGE TYPE                  = 62
      MESSAGE SUBTYPE               = 1 - NORMAL SET
                                    = 2 - POST HOUSEKEEPING SET
                                    = 3 - ECLIPSE SET
                                    = 4 - POST MANEUVER SET
                                    = 5 - POST YAW FLIP SET
                                    = 6 - POST THRUSTER FLUSHING SET
                                    = 7 - POST ECLIPSE
      TRACER                        = ASCII BLANKS
      MESSAGE COUNT                 = 1
      END OF MESSAGE                = TRUE
      ROUTING ID                    = N/A
```

DATA BLOCK LAYOUT:

HALF-WORD NO.	MSB 0	1	2	3	4	5	6	7	8	9	10	11	12	13	14	LSB 15	
1	IMC SET IDENTIFIER																
2																	
3	IMC SET SUBTYPE																
4																	
5	YEAR																EPOCH DATE
6		DAY OF YEAR											HR(10s)				
7	HR(1s)				MINUTES								SEC(10s)				
8	SEC(1s)				MSECS												

Message 62 – IMC Set Ready (GOES N-P) (2 of 2)

DATA ITEM	FORMAT	VALIDATION	UNITS
IMC SET ID	ASCII	ANNN FOR IMC	N/A
IMC SET SUBTYPE	I*4	1 - FULL SET (24 HR) 2 - NEW ORBIT REF. SET 3 - SSAA, COUPLED IM/SDR 4 - SSAA, UNCOUPLED IM/SDR 5 - POST - SET (Housekeeping, maneuver, yaw flip) 6 - SSAA	N/A
EPOCH DATE YEAR	BCD	1989-2025	YEAR
DAY OF YEAR	BCD	1-366	DAY
HOUR	BCD	0-23	HOUR
MINUTES	BCD	0-59	MIN
SECONDS	BCD	0-59	SECS
MILLISECONDS	BCD	0-999	MSECS

Notes:

If the IMC set subtype is 1, the entire O&A prediction products have been updated. GTACS should request eclipse times, intrusion events, and star sighting commands.

Message 63 – SSAA IMC Set Ready (GOES I-M) (1 of 2)

OATS sends GIMTACS an unsolicited Message 63 after generating a new IMC coefficient set as a result of an automatic Short Span Attitude Adjust (SSAA). This message informs GIMTACS that a Message 53, providing a new IMC coefficient set, is coming immediately. The Message 63 data block layout and field definitions follow.

```
HEADER BLOCK FIELDS:
      MESSAGE SEQUENCE NO.          = 1-65535
      SATELLITE ID                  = 8,9,10,11,12 (I-M)
      SOURCE                        = 41,42,43,44,45,46,47,48,49,50 (OATS)
      DESTINATION                   = 10 (GIMTACS)
      NO. OF HALF-WORDS             = VARIABLE (SEE NOTES)
      MESSAGE TYPE                  = 63
      MESSAGE SUBTYPE               = 3 - SSAA, COUPLED IMGR/SNDR
                                    = 4 - SSAA, UNCOUPLED IMGR/SNDR
      TRACER                        = BLANKS
      MESSAGE COUNT                 = 1
      END OF MESSAGE                = TRUE
      ROUTING ID                    = AS PROVIDED IN MSG 153

DATA BLOCK LAYOUT:
 HALF-
 WORD NO. MSB                                          LSB
           0  1  2  3  4  5  6  7  8  9 10 11 12 13 14 15
         |-----------------------------------------------|
       1 |                IMC SET IDENTIFIER             |
       2 |                                               |
         |-----------------------------------------------|
       3 |                 SSAA USAGE FLAG               |
       4 |                                               |
         |-----------------------------------------------|
       5 |                      SPARE                    |
       6 |                                               |
         |-----------------------------------------------|
       7 |                  YAW FLIP FLAG                |
       8 |                                               |
         |-----------------------------------------------|
       9 |              DATA FORMAT INDICATOR            |
         |-----------------------------------------------|
      10 |                DYNAMIC RANGE FLAG             |
         |-----------------------------------------------|
      11 |   RECOMMENDED IMC SET ENABLE TIME FROM EPOCH  |
      12 |                                               |
         |-----------------------------------------------|-
      13 |                       YEAR                    | |
         |-----------------------------------------------| |
      14 |   |        DAY OF YEAR           |  HR (10'S) | | EPOCH
         |-----------------------------------------------| | DATE AND
      15 |  HR (1'S) |       MINUTES        | SEC (10'S) | | TIME
         |-----------------------------------------------| |
      16 | SEC (1'S) |                MSEC                | |
         |-----------------------------------------------|-
      17 |          SPACECRAFT COMPENSATION - ROLL       |
      18 |                                               |
         |-----------------------------------------------|
      19 |         SPACECRAFT COMPENSATION - PITCH       |
      20 |                                               |
         |-----------------------------------------------|
      21 |          SPACECRAFT COMPENSATION - YAW        |
      22 |                                               |
         |-----------------------------------------------| - Subt. 3
      23 |     ATTITUDE CONSTANTS - ROLL, PITCH, YAW,    |
       :  |     ROLL MISALIGNMENT, PITCH MISALIGNMENT     |
      42 |        (5 EACH FOR IMAGER THEN SOUNDER)       |
         |-----------------------------------------------| - Subt. 4
```

Message 63 – SSAA IMC Set Ready (2 of 2)

DATA ITEM	FORMAT	VALIDATION	UNITS
IMC SET IDENTIFIER	ASCII	ANNN FOR IMC	N/A
SSAA USAGE FLAG	I*4	0 - NOT A REACTIVE SET	
		1 - BOTH IMAC AND START SENSE DELTA	
		2 - IMC ONLY	
		3 - START SENSE DELTA ONLY	
DATA FORMAT INDICATOR	I*2	0 - COEFFICIENT	N/A
DYNAMIC RANGE FLAG	I*2	1 - LOW, 2 - HIGH	N/A
RECOMMENDED ENABLE TIMER FROM IMC EPOCH	R*4	SEE NOTE BELOW	MIN
EPOCH DATE AND TIME - YEAR	BCD	1989-2025	YEAR
DAY OF YEAR	BCD	1-366	DAY
HOUR	BCD	0-23	HOUR
MINUTE	BCD	0-59	MINUTE
SECOND	BCD	0-59	SECOND
MILLISECOND	BCD	0-999	MSEC
SPACECRAFT COMPENSATION ROLL, PITCH, YAW	R*4	-.004 TO +.004	RAD
ATTITUDE CONSTANTS	R*4	-0.00327 TO +0.00327	RAD

Notes:

1. The yaw-flip flag will be +1 for normal spacecraft and -1 for flipped spacecraft.
2. A parent IMC set is generally effective throughout the entire image registration period. Because of various random natural phenomena or dynamic range limitations, the parent IMC set may be modified by small IMC subsets for varying subspans of the co-registration period. The parent IMC set and its modifiers all have the same IMC epoch.
3. The IMC set identifier and validation is described in Section 4.3.2.2.1.
4. A short-term IMC set (Subtype 3 is used only when compensating for Earth sensor errors due to clouds, or radiance gradient, or when operating with an Earth sensor inhibited due to magnetic storms, etc. For this case, only the spacecraft compensation terms change, and the message terminates with half-word 22. The epoch will be the same as that for the currently active coefficient set, and should not be uploaded.
5. A thermal induced IMC set (Subtype 4) is used when compensating for misalignments caused by non-repeatable on board thermal changes to Imager or Sounder pointing. The spacecraft compensation terms will be the same as the parent set and the ten attitude constants will give the correction for Imager and Sounder. The message terminates at word 42.
6. The recommended enable time is in minutes and is relative to the epoch time. It commonly may be a negative number, which indicates that the recommended enable time is before the epoch time.
7. All subtypes will have the same epoch of the parent type. Types 3 and 4 should be loaded as early as possible. A parent IMC set may be modified at a specific time by a modifying IMC set (Subtype 3 or 4). These modifying IMC sets may be in effect sequentially in any order, but only one modifying set may be in effect at a given time. When the operator changes from one modifying subtype to another, the transition IMC set OATS generates (Subtype 4) ensures the integrity of the entire IMC process – including the on-board IMC scan correction process as well as the GIMTACS star commanding correction.

Message 66 – DIRA Calibration Data Request (GOES I-M) (1 of 2)

OATS sends GIMTACS an unsolicited Message 66 whenever it needs telemetry data relating to the DIRAs. The Message 66 data block layout and field definitions follow.

```
HEADER BLOCK FIELDS:
      MESSAGE SEQUENCE NO.          = 1-65535
      SATELLITE ID                  = 8,9,10,11,12 (I-M)
      SOURCE                        = 41,42,43,44,45,46,47,48,49,50 (OATS)
      DESTINATION                   = 10 (GIMTACS)
      NO. OF HALF-WORDS             = UP TO 224 (SEE NOTES)
      MESSAGE TYPE                  = 66
      MESSAGE SUBTYPE               = 1 - PID REQUEST
      TRACER                        = UNIQUE ID SUPPLIED BY OATS
      MESSAGE COUNT                 = 1
      END OF MESSAGE                = TRUE
      ROUTING ID                    = N/A

DATA BLOCK LAYOUT:
 HALF-
 WORD NO. MSB                                          LSB
           0  1  2  3  4  5  6  7  8  9 10 11 12 13 14 15
         |-----------------------------------------------|—
      1  |                      YEAR                     |  |
         |-----------------------------------------------|  | DATA
      2  |  |         DAY OF YEAR            |  HR (10s)|  |
         |-----------------------------------------------|  | START
      3  |  HR (1s)  |        MINUTES        |  SEC (10s)|  |
         |-----------------------------------------------|  | TIME
      4  |  SEC (1s) |             MSECS                 |  |
         |-----------------------------------------------|—
      5  |               DATA SPAN DURATION              |
      6  |
         |-----------------------------------------------|
      7  |      NUMBER OF DATA SETS (N) IN REQUEST       |
      8  |
         |-----------------------------------------------|
      9  |          RESPONSE SUBTYPE FOR SET NO. 1       |
     10  |   (MESSAGE SUBTYPE TO BE USED IN RESPONSE)    |
         |-----------------------------------------------|
     11  |      DATA THINNING CONSTANT FOR SET NO.1      |
     12  |
         |-----------------------------------------------|
     13  |       NUMBER OF PIDS (M) IN DATA SET NO.1     |
     14  |
         |-----------------------------------------------|
     15  |
      .  |        LIST OF M PIDS FOR DATA SET NO.1       |
  14+2M  |
         |-----------------------------------------------|
  15+2M  |   RESPONSE SUBTYPES, DATA THINNING CONSTANTS, |
      .  |       NUMBER OF PIDS, AND PID LISTS FOR       |
      .  |                DATA SETS 2-N                  |
    8+   |
 N(6+2M) |-----------------------------------------------|
```

Message 66 – DIRA Calibration Data Request (2 of 2)

DATA ITEM	FORMAT	VALIDATION	UNITS
DATA SPAN START TIME YEAR	BCD	1989-2025	YEAR
DAY OF YEAR	BCD	1-366	DAY
HOUR	BCD	0-23	HOURS
MINUTES	BCD	0-59	MIN
SECONDS	BCD	0-59	SEC
MSEC	BCD	0-999	MSEC
DATA SPAN DURATION	R*4	1-120	MIN
NUMBER OF DATA SETS	I*4	0-12	N/A
RESPONSE SUBTYPE	I*4	7,8	N/A
DATA THINNING CONSTANTS	I*4	1-120	N/A
NUMBER OF PIDS IN SET	I*4	1-7	N/A
DATA PIDS	I*4	1-9999	N/A

Notes:

1. The time stamp is the time at which this response was generated.

3. The following are OATS node numbers:
   41 = SOAT01 42 = SOAT02
   43 = SOAT03 44 = SOAT04
   45 = SOAT05 46 = SOAT06
   47 = COAT01 48 = COAT02
   49 = GOAT01 50 = GOAT02

4. The message length varies with the number of data sets in the message and the number of parameter identifiers (PIDs) in each data set. This flexible format has been chosen to facilitate future changes. The message length is given by $8 + N(6 + 2M)$, with a maximum length of 224, sixteen-bit half-words when $N = 12$ and $M = 6$.

5. A Parameter Identification (PID) is a unique identifier associated with a single telemetry parameter. Each parameter is assumed to have a unique PID. The following lists the parameters required for DIRA calibration along with their description and location in the post code modulation (PCM) frame.

Parameter	TLM Word	PID
DIRA Accumulated Roll Data	26, 27 (AOCS Format No.1)	0031
DIRA Accumulated Pitch Data	31, 32 (AOCS Format No.1)	0082
DIRA Accumulated Yaw Data	33, 34 (AOCS Format No.1)	0103
DSS Pitch	35-6 Bits 7, 8	0008
	35-7 Bits 1–7	
DSS Yaw	35-7 Bit 8	0310
	35-8 Bits 1–8	
ES Roll Data	29, 30 Bits 1-4 (AOCS Format No.2)	0055
TLM Format Selection	24 Bits 1-3	0324

6. The tracer is expected to be returned unchanged in the response message for identification.

7. The thinning constant indicates that only every K^{th} value of the parameter is to be returned, where K is the thinning constant value with respect to the location of the parameter in the telemetry stream minor or major frame.

8. The response subtype is specified for requested telemetry data only. It is used internally by OATS and does not need to be used by GIMTACS to identify the data requested. However, GIMTACS must echo this response subtype in the Message 166.

Message 67 – Trim Tab Data Request (GOES I-M) (1 of 3)

OATS sends GIMTACS an unsolicited Message 67-1 when it needs telemetry data, and a Message 67-2 to obtain thruster firing history data that both relate to the trim tab control calculation. Each data request is interpreted by GIMTACS as a separate request. The Message 67 data block layout and field definitions follow.

```
HEADER BLOCK FIELDS:
      MESSAGE SEQUENCE No.          = 1-65535
      SATELLITE ID                  = 8,9,10,11,12 (I-M)
      SOURCE                        = 41,42,43,44,45,46,47,48,49,50 (OATS)
      DESTINATION                   = 10 (GIMTACS)
      NO. OF HALF-WORDS             = UP TO 560 (SEE NOTES)
      MESSAGE TYPE                  = 67
      MESSAGE SUBTYPE               = 1 - PID REQUEST
                                    = 2 - THRUSTER DATA REQUEST
      TRACER                        = UNIQUE ID SUPPLIED BY OATS
      MESSAGE COUNT                 = 1
      END OF MESSAGE                = TRUE
      ROUTING ID                    = N/A

DATA BLOCK LAYOUT:
 HALF-
 WORD NO. MSB                                          LSB
           0  1  2  3  4  5  6  7  8  9 10 11 12 13 14 15
          |-----------------------------------------------|
      1   |                     YEAR                      |
          |-----------------------------------------------|
      2   |         DAY OF YEAR           |  HR (10s)     |
          |-----------------------------------------------|
      3   |  HR (1s)  |        MINUTES    |  SEC (10s)    |
          |-----------------------------------------------|
      4   |  SEC (1s) |              MSECS                |
          |-----------------------------------------------|
      5   |              DATA SPAN DURATION               |
      6   |
          |-----------------------------------------------|
      7   |      NUMBER OF DATA SETS (N) IN REQUEST       |
      8   |
          |-----------------------------------------------|
      9   |         RESPONSE SUBTYPE FOR SET NO.1         |
     10   |  (MESSAGE SUBTYPE TO BE USED IN RESPONSE)     |
          |-----------------------------------------------|
     11   |       DATA THINNING CONSTANT FOR SET NO.1     |
     12   |
          |-----------------------------------------------|
     13   |       NUMBER OF PIDS (M) IN DATA SET NO.1     |
     14   |
          |-----------------------------------------------|
     15   |
      .   |        LIST OF M PIDS FOR DATA SET NO.1       |
  14+2M   |
          |-----------------------------------------------|
  15+2M   |        RESPONSE SUBTYPES, DATA THINNING       |
      .   |         CONSTANTS, NUMBER OF PIDS, AND        |
      .   |           PID LISTS FOR DATA SETS 2-N         |
    8+    |
 N(6+2M)  |-----------------------------------------------|
```

DATA START TIME

Message 67 – Trim Tab Data Request (2 of 3)

DATA ITEM	FORMAT	VALIDATION	UNITS
FRAME START TIME YEAR	BCD	1989-2025	YEAR
DAY OF YEAR	BCD	1-366	DAY
HOUR	BCD	0-23	HOURS
MINUTES	BCD	0-59	MIN
SECONDS	BCD	0-59	SEC
MSEC	BCD	0-999	MSEC
DATA SPAN DURATION	R*4	1-1500	MIN
NUMBER OF DATA SETS	I*4	0-12	N/A
RESPONSE SUBTYPE	I*4	1,4,5,6	N/A
DATA THINNING CONSTANTS	I*4	1-2400	N/A
NUMBER OF PIDS IN SET	I*4	1-20	N/A
DATA PIDS	I*4	1-9999	N/A

Notes:

1. The time stamp is simply the time that the response was generated.

   The following are OATS node numbers:

   41 = SOAT01 42 = SOAT02
   43 = SOAT03 44 = SOAT04
   45 = SOAT05 46 = SOAT06
   47 = COAT01 48 = COAT02
   49 = GOAT01 50 = GOAT02

2. The message length varies with the number of data sets in the message and the number of PIDs in each data set, a flexible format selected to facilitate future changes. The message length is given by $8 + N(6 + 2M)$ with a maximum length of 560 16-bit half-words when $N = 12$ and $M = 20$.

3. A PID is a unique identifier associated with a single telemetry parameter. Each parameter is assumed to have a unique PID. The following is a parameter list required for trim tab calibration along with their description and location in the PCM frame.

Propellant Tank Parameter	TLM Word	PID
Oxidizer Tank Temperature 1	113-15	5193
Oxidizer Tank Temperature 2	113-16	5194
Fuel Tank Temperature 1	113-17	5195
Fuel Tank Temperature 2	113-18	5196
Fuel Tank Pressure (Ext Range)	88-15	3010
Oxidizer Tank Pressure (Ext Range)	88-16	3011
Fuel Line Pressure (Ext Range)	88-13	3008
Oxidizer Line Pressure (Ext Range)	88-14	3009
Fuel Tank Pressure	88-10	3005
Oxidizer Tank Pressure	88-11	3006

Message 67 – Trim Tab Data Request (3 of 3)

Propellant Tank Parameter	TLM Word	PID
Thruster Firing History (on-time and activity)	AOCS Format No. 5	(Msg 67-2)
Trim Tab Position-Primary	Trim Tab Pseudo PID 1	9602
Trim Tab Position-Backup	Trim Tab Pseudo PID 2	9603
Magnetic Torquer 1 Current	Trim Tab Pseudo PID 3	9600
Magnetic Torquer 2 Current	Trim Tab Pseudo PID 4	9601
Magnetometer Data	18, 19	
X-Axis	20, 21	7300
Y-Axis	22, 23	7301
Z-Axis		7303
Momentum Wheel	33, 34 (Format No. 2)	
No. 1 Speed	26, 27 (Format No. 2)	0104
No .2 Speed		0032
Reaction Wheel Speed	33, 34 or 26, 27 (Format No. 2)	0105 or 0034

4. The primary trim tab position referenced by Trim Tab Pseudo PID 1 is based on TLM words 88–17, 88–18, and 88–19; the backup trim tab position referenced by Trim Tab pseudo PID 2 is based on TLM words 100–2, 100–3, and 100–4.

5. The magnitude of magnetic torquer 1 current referenced by Trim Tab Pseudo PID 3 is obtained from TLM word 120 and bits 1 and 2 of word 121. The sign of the current is obtained from TLM bit 7 of word 34 in format 4. The magnitude of magnetic torquer 2 current referenced by Trim Tab Pseudo PID 4 is obtained from TLM word 122 and bits 1 and 2 of word 123. The sign of the current is obtained from TLM bit 8 of word 34 in format 4.

6. The tracer is expected to be returned unchanged in the response message for identification.

7. The thinning constant indicates that only every K^{th} value of the parameter is to be returned, where *K* is the thinning constant value with respect to the location of the parameter in the telemetry stream minor or major frame.

8. Telemetry data is only requested through a Message 67-1.

9. The response subtype, half-word 9, is specified for requested telemetry data only. It is used internally by OATS and does not need to be used by GIMTACS to identify the data requested. However, GIMTACS must echo this response subtype in the Message 167.

10. Thruster firing history data is only requested by a Subtype 2 of this message. In that case, the message ends at half-word 8 and the number of data sets in the request equals zero. All thruster activity during the requested span, exclusive of firings during the AOCS stationkeeping mode, should be sent.

11. GIMTACS responds with a Message 167-2 for thruster firing history data.

Message 70 – Propulsion Subsystem Data Request (1 of 3)

OATS sends GIMTACS/GTACS an unsolicited Message 70-1 to obtain propulsion system telemetry data, and a 70–2 for thruster firing history data relating to propulsion subsystem processing. Each data request is interpreted by GIMTACS/GTACS as a separate request. The Message 70 data block layout and field definitions follow.

```
HEADER BLOCK FIELDS:
      MESSAGE SEQUENCE NO.          = 1-65535
      SATELLITE ID                  = 8,9,10,11,12,13,14,15 (I-P)
      SOURCE                        = 41,42,43,44,45,46,47,48,49,50 (I-M OATS)
                                    = 75-85 (N-P OATS)
      DESTINATION                   = 10 (GIMTACS)
                                    = 90-101 (GTACS)
      NO. OF HALF-WORDS             = UP TO 560 (SEE NOTES)
      MESSAGE TYPE                  = 70
      MESSAGE SUBTYPE               = For GOES I-M
                                    = 1 - PID REQUEST
                                    = 2 - THRUSTER DATA REQUEST
                                    = For GOES N-P
                                    = 1 - LRV REQUEST
      TRACER                        = UNIQUE ID SUPPLIED BY OATS
      MESSAGE COUNT                 = 1
      END OF MESSAGE                = TRUE
      ROUTING ID                    = N/A

DATA BLOCK LAYOUT:
 HALF-
 WORD NO. MSB                                          LSB
           0  1  2  3  4  5  6  7  8  9 10 11 12 13 14 15
          |-----------------------------------------------|_
      1   |                     YEAR                      | |
          |-----------------------------------------------| | DATA
      2   |  |         DAY OF YEAR            |  HR (10s) | | START
          |-----------------------------------------------| | TIME
      3   |  HR (1s)  |        MINUTES         |  SEC (10s)| |
          |-----------------------------------------------| |
      4   |  SEC (1s) |               MSECS               | |
          |-----------------------------------------------|_
      5   |               DATA SPAN DURATION              |
      6   |
          |-----------------------------------------------|
      7   |      NUMBER OF DATA SETS (N) IN REQUEST       |
      8   |
          |-----------------------------------------------|
      9   |         RESPONSE SUBTYPE FOR SET NO.1         |
     10   |  (MESSAGE SUBTYPE TO BE USED IN RESPONSE)     |
          |-----------------------------------------------|
     11   |     DATA THINNING CONSTANT FOR SET NO.1       |
     12   |
          |-----------------------------------------------|
     13   |   NUMBER OF PIDS/LRV (M) IN DATA SET NO.1     |
     14   |
          |-----------------------------------------------|
     15   |
      .   |    LIST OF M PIDS/LRV FOR DATA SET NO.1       |
  14+2M   |
          |-----------------------------------------------|
  15+2M   |        RESPONSE SUBTYPES, DATA THINNING       |
      .   |    CONSTANTS, NUMBER OF PIDS/LRV, AND         |
      .   |     PID/LRV LISTS FOR DATA SETS 2-N           |
    8+    |
 N(6+2M)  |-----------------------------------------------|
```

Message 70 – Propulsion Subsystem Data Request (2 of 3)

DATA ITEM	FORMAT	VALIDATION	UNITS
FRAME START TIME YEAR	BCD	1989-2025	YEAR
DAY OF YEAR	BCD	1-366	DAY
HOUR	BCD	0-23	HOURS
MINUTES	BCD	0-59	MIN
SECONDS	BCD	0-59	SEC
MSEC	BCD	0-999	MSEC
DATA SPAN DURATION	R*4	1-120	MIN
NUMBER OF DATA SETS	I*4	0-12	N/A
RESPONSE SUBTYPE	I*4	1,3,6	N/A
DATA THINNING CONSTANTS	I*4	1-2400	N/A
NUMBER OF PIDS IN SET	I*4	1-20	N/A
DATA PIDS/LRVS	I*4	1-9999 (I-M PIDS)	N/A
	I*4	10000-99999 (N-P LRVS)	N/A

Notes:

1. The time stamp is the time that the response was generated.

2. The message length varies with the number of data sets in the message and the number of PIDs in each data set, a flexible format selected to facilitate future changes. The message length is determined by $8 + N(6 + 2M)$, with a maximum length of 560 16-bit half-words when $N = 12$ and $M = 20$.

3. (For GOES I-M) A PID is a unique identifier associated with a single telemetry parameter. Every parameter is assumed to have a unique PID. The following lists the parameters required for DIRA calibration along with their description and location in the PCM frame:

Propellant Tank Parameter	TLM Word	PID
Oxidizer Tank Temperature 1	113-15	5193
Oxidizer Tank Temperature 2	113-16	5194
Fuel Tank Temperature 1	113-17	5195
Fuel Tank Temperature 2	113-18	5196
Fuel Tank Pressure (Ext Range)	88-15	3010
Oxidizer Tank Pressure (Ext Range)	88-16	3011
Fuel Line Pressure (Ext Range)	88-13	3008
Oxidizer Line Pressure (Ext Range)	88-14	3009
Fuel Tank Pressure	88-10	3005
Oxidizer Tank Pressure	88-11	3006
Thruster Firing History (on time and activity)	AOCS Format No. 5	Msg 70-2
SADA Output Position Channel A	Word 59	9604
SADA Output Position Channel B	Word 60	9604

Message 70 – Propulsion Subsystem Data Request (3 of 3)

4. (For GOES N-P) A LRV is a unique identifier associated with a single telemetry parameter. Every parameter is assumed to have a unique LRV. The following is a list of the parameters required for maneuver validation. The listed ACE LRVs use "n" to designate the first digit where n is either 1 or 2 corresponding to the active ACE.

PARAMETER	LRV
Oxidizer Tank 1 Temp A, B, C	42064, 42065, 42074
Oxidizer Tank 2 Temp A, B, C	42066, 42067, 42075
Fuel Tank 1 Temp A, B, C	42060, 42061, 42072
Fuel Tank 2 Temp A, B, C	42062, 42063, 42073
Fuel Tank 1 Pressure	32010
Fuel Tank 2 Pressure	32011
Oxidizer Tank 1 Pressure	32012
Oxidizer Tank 2 Pressure	32013
ECI-to-body quaternion	n2025-n2028
Roll, pitch, yaw momentum in ECI	n2150-n2152
Roll, pitch, yaw momentum in body	n2068-n2070
Yaw-flip flag	n8793
Thruster on-time (cumulative)	n4440, 4441, 4442,…, 1451
Thruster pulses (cumulative)	n4460, 4461, 4462,…, 4471
Thruster active jets	n4480, 4481, 4482,…, 4491
Thruster commanded pulse width	n4591
Thruster cycle duration	n4433
Thruster selected jets	n4410, 4411, 4412,…, 4421
Tank Latch valve status - fuel	32000, 32001
Tank Latch valve status – oxi.	32002, 32003
Solar Array Drive Angle	n3148
Minor Frame Count	30059

5. (GOES I-M) Solar Array Drive Assembly (SADA) output position is reported as one pseudo PID.

6. The tracer is expected to be returned unchanged in the response message for identification.

7. The thinning constant indicates that only every K^{th} value of the parameter is to be returned, where *K* is the thinning constant value with respect to the location of the parameter in the telemetry stream minor or major frame.

8. Telemetry data is only requested by a Message 70-1.

9. The response subtype (half-word 9) is specified for requested telemetry data only. It is used internally by OATS and does not need to be used by GIMTACS/GTACS to identify the data requested. However, GIMTACS/GTACS must echo this subtype in the Message 170.

10. (GOES I-M only) Thruster firing history data is only requested by a Message 70-2. In that case, the message ends at half-word 8 and the number of data sets in the request equals zero. All thruster activity during the AOCS stationkeeping mode should be sent.

11. GIMTACS responds with a Message 170-2 for thruster firing history data.

Message 71 – Star Window Request (1 of 2)

Whenever OATS determines that the attitude uncertainty mode has changed, it requests star windows from GIMTACS/GTACS by way of one of three Message 71 subtypes. GIMTACS/GTACS responds with a Message 151.

Subtype 1 indicates OATS needs to change the number of looks required for each star without changing the current window schedule. GIMTACS/GTACS should respond by sending the remaining windows in its normal operating schedule for OATS to provide new starlook command data.

Subtype 2 indicates the attitude uncertainty has degenerated to the point where an extended search for stars is required. In this case, GIMTACS/GTACS should send its star window contingency schedule, which provides larger windows than a normal schedule. OATS responds with new starlook command data for these contingency schedule windows.

Subtype 3 indicates the attitude uncertainty has returned to an acceptable level so a contingency schedule of windows is no longer needed. GIMTACS/GTACS should respond with the remaining windows in its normal operating schedule. OATS, in turn, responds with starlook command data for these windows.

The Message 71 data block layout and field definitions follow.

```
HEADER BLOCK FIELDS:
      MESSAGE SEQUENCE NO.          = 1-65535
      SATELLITE ID                  = 8,9,10,11,12,13,14,15 (I-P)
      SOURCE                        = 41,42,43,44,45,46,47,48,49,50(I-M OATS)
                                    = 75-85 (N-P OATS)
      DESTINATION                   = 10 (GIMTACS)
                                    = 90-101 (GTACS)
      NO. OF HALF-WORDS             = 4
      MESSAGE TYPE                  = 71
      MESSAGE SUBTYPE               = 1 - NORMAL WINDOWS REQUIRED
                                    = 2 - CONTINGENCY WINDOWS REQUIRED
                                    = 3 - MAY RETURN TO NORMAL WINDOWS
      TRACER                        = ASCII BLANKS
      MESSAGE COUNT                 = 1
      END OF MESSAGE                = TRUE
      ROUTING ID                    = N/A

DATA BLOCK LAYOUT:
 HALF-
 WORD NO. MSB                                          LSB
          0  1  2  3  4  5  6  7  8  9 10 11 12 13 14 15
        |-----------------------------------------------|
      1 |                IMC SET IDENTIFIER             |
      2 |
        |-----------------------------------------------|
      3 |                      SPARE                    |
      4 |
        |-----------------------------------------------|
```

Message 71 – Star Window Request (2 of 2)

DATA ITEM	FORMAT	VALIDATION	UNITS
IMC SET IDENTIFIER	ASCII	ANNN	N/A

Notes:

1. A Subtype 1 message indicates OATS requires larger starlook areas, which generally means more looks per star sighting. The current windows are adequate, and GIMTACS/GTACS needs simply to resend the remaining windows in its current working schedule.

2. A Subtype 2 message indicates OATS requires larger starlook areas which are not supportable by the current window schedule. GIMTACS/GTACS must send OATS its contingency star viewing schedule, which provides larger and possibly more frequent viewing windows.

3. A Subtype 3 message indicates OATS no longer requires the larger starlook areas. GIMTACS/GTACS may resend the remaining windows in its nominal working schedule to receive the nominal commands.

4. The IMC set identifier represents the parent IMC set for the currently enabled IMC group. This identifier is reflected back to OATS in the corresponding Message 151.

Message 72 – OATS Alarm Text

OATS sends GIMTACS/GTACS an unsolicited Message 72 whenever an alarm message is generated by any task within OATS. The message contains an ASCII text version of the OATS alarm sent to GIMTACS/GTACS for informational purposes only. The Message 72 data block layout and field definitions follow.

```
HEADER BLOCK FIELDS:
      MESSAGE SEQUENCE NO.          = 1-65535
      SATELLITE ID                  = 8,9,10,11,12,13,14,15 (I-P)
      SOURCE                        = 41,42,43,44,45,46,47,48,49,50 (I-M OATS)
                                    = 75-85 (N-P OATS)
      DESTINATION                   = 10 (GIMTACS)
                                    = 90-101 (GTACS)
      NO. OF HALF-WORDS             = 40
      MESSAGE TYPE                  = 72
      MESSAGE SUBTYPE               = 0
      TRACER                        = ASCII BLANKS
      MESSAGE COUNT                 = 1
      END OF MESSAGE                = TRUE
      ROUTING ID                    = N/A

DATA BLOCK LAYOUT:
 HALF-
 WORD NO. MSB                                          LSB
           0  1  2  3  4  5  6  7  8  9 10 11 12 13 14 15
         |-----------------------------------------------|
      1  |                                               |
      .  |             CURRENT ALARM MESSAGE             |
     40  |                                               |
         |-----------------------------------------------|
```

DATA ITEM	FORMAT	VALIDATION	UNITS
CURRENT ALARM MESSAGE	ASCII	N/A	N/A

Notes:

The assembled alarm message is 80 characters in length with the following data in the designated bytes. Bytes not specified are blank.

1-19	Time stamp in the form yy/ddd_hh:mm:ss.sss
21-22	Satellite ID, eg. '_8' or '12' or '14'
24-31	Reporting task name
33-80	Text of message

The '_' represents a blank.

Message 73 – Torque Table Updates (GOES N-P) (1 of 2)

The torque table is the best estimate of torque in the body frame produced by each thruster. OATS calculates the torque table using current estimates of propellant tank pressures, S/C center of mass, and thruster calibration factors. OATS will normally send Message 73 to GTACS just before and after the N-S SK maneuvers for upload to the S/C.

```
HEADER BLOCK FIELDS:
      MESSAGE SEQUENCE NO.          = 1-65535
      SATELLITE ID                  = 13,14,15 (N-P)
      SOURCE                        = 75 - 85 (OATS)
      DESTINATION                   = 90 - 101 (GTACS)
      NO. OF HALF-WORDS             = 76
      MESSAGE TYPE                  = 73
      MESSAGE SUBTYPE               = 0
      TRACER                        = ASCII BLANKS
      MESSAGE COUNT                 = 1
      END OF MESSAGE                = TRUE
      ROUTING ID                    = N/A
```

DATA BLOCK LAYOUT:

HALF-WORD NO.	MSB 0	1	2	3	4	5	6	7	8	9	10	11	12	13	14	LSB 15
1	YEAR															
2		DAY OF YEAR										HR(10s)				
3	HR(1s)			MINUTES								SEC(10s)				
4	SEC(1s)			MSECS												
5 6	TORQUE FOR THRUSTER #1 – ROLL AXIS															
7 8	TORQUE FOR THRUSTER #1 – PITCH AXIS															
9 10	TORQUE FOR THRUSTER #1 – YAW AXIS															
11 : 76	REPEAT WORDS 5 THROUGH 10 FOR THE REMAINING 11 THRUSTERS															

DATA ITEM	FORMAT	VALIDATION	UNITS
YEAR	BCD	2000-2025	YEAR
DAY OF YEAR	BCD	1-366	DAY
HOUR	BCD	0-23	HOUR
MINUTE	BCD	0-59	MIN
SECONDS	BCD	0-59	SEC
MILLISECONDS	BCD	0-999	MSEC
TORQUE	R*4	-20 to + 20	Nm

Notes:

1. The torque table is defined as the best estimate of torque in the manufacturing frame (equivalent to body frame) produced by each thruster. It is used by OATS to calculate the change in momentum caused by the thrusters. The torque table will normally be uploaded just before and after the N-S SK maneuvers.

Message 73 – Torque Table Updates (GOES N-P) (2 of 2)

2. The roll, pitch and yaw body axes are defined in the S/C body coordinate system.

3. A nominal torque table is shown below:

Thruster	Jet ID	Roll	Pitch	Yaw
1	N1	8.73625	0.123340	-9.51834
2	N2	8.73625	-0.167574	9.76301
3	N3	-6.41743	-0.210284	-9.37198
4	N4	-6.41743	0.245923	9.61816
5	E1	0.339670	0.471259	-9.56956
6	E2	1.33307	0.325303	9.09248
7	W1	0.348589	-0.468979	9.53327
8	W2	-0.340164	-0.335688	-9.18442
9	A1	-7.82087	12.1440	0.000000
10	A2	10.7921	10.3899	0.000000
11	A3	-7.82087	-12.3968	0.000000
12	A4	10.7921	-10.6426	0.000000

Message 75 – IMC Scale Factor Calibration Schedule Response (1 of 3)

OATS responds to a GIMTACS/GTACS Message 175 with a Message 75 containing the requested IMC scale factors, star view window commands and schedule after their calculation. The Message 75 data block layout and field definitions follow.

```
HEADER BLOCK FIELDS:
      MESSAGE SEQUENCE NO.          = 1-65535
      SATELLITE ID                  = 8,9,10,11,12,13,14,15 (I-P)
      SOURCE                        = 41,42,43,44,45,46,47,48,49,50 (I-M OATS)
                                    = 75-85 (N-P OATS)
      DESTINATION                   = 10 (GIMTACS)
                                    = 90-101 (GTACS)
      NO. OF HALF-WORDS             = VARIABLE (SEE NOTES)
      MESSAGE TYPE                  = 75
      MESSAGE SUBTYPE               = 1 - IMAGER
                                    = 2 - SOUNDER
      TRACER                        = BLANKS
      MESSAGE COUNT                 = 1-255
      END OF MESSAGE                = TRUE/FALSE
      ROUTING ID                    = AS PROVIDED IN MSG 175
```

```
DATA BLOCK LAYOUT:
 HALF-
 WORD NO. MSB                                          LSB
          0  1  2  3  4  5  6  7  8  9 10 11 12 13 14 15
        |-----------------------------------------------|-
      1 |                    YEAR                       | |
        |-----------------------------------------------| | DATA
      2 |  |         DAY OF YEAR            |  HR (10s) | | START
        |-----------------------------------------------| | TIME
      3 |  HR (1s)  |        MINUTES         |  SEC (10s) | |
        |-----------------------------------------------| |
      4 |  SEC (1s) |               MSECS                | |
        |-----------------------------------------------|-
      5 |          NUMBER OF OFFSET CHANGES (N)          |
      6 |
        |-----------------------------------------------|
      7 |                    SPARE                       |
      8 |
        |-----------------------------------------------|
      9 |             FIRST IMC OFFSET                   |
     10 |
        |-----------------------------------------------|
     11 |      NO. OF STARS FOR THIS IMC OFFSET (K)      |
     12 |
        |-----------------------------------------------|
     13 |                    STAR ID                     |
     14 |
        |-----------------------------------------------|
     15 |           NO. (J) OF LOOKS FOR STAR            |
     16 |
        |-----------------------------------------------|
     17 |           LOOK NO. IN CMD SEQUENCE             |
     18 |
        |-----------------------------------------------|
     19 |                LOOK DWELL REPEATS              |
     20 |
        |-----------------------------------------------|-
     21 |                    YEAR                       | |
        |-----------------------------------------------| | COMMAND
     22 |  |         DAY OF YEAR            |  HR (10s) | | EXECUTE
        |-----------------------------------------------| | TIME
     23 |  HR (1s)  |        MINUTES         |  SEC (10s) | |
        |-----------------------------------------------| |
     24 |  SEC (1s) |               MSECS                | |
        |-----------------------------------------------|-
     25 |                   E-W CYCLES                   |
     26 |
        |-----------------------------------------------|
```

Message 75 – IMC Scale Factor Calibration Schedule Response (2 of 3)

```
HALF-
WORD NO. MSB                                          LSB
         0  1  2  3  4  5  6  7  8  9 10 11 12 13 14 15
        |-----------------------------------------------|
    27  |                 E-W INCREMENTS                |
    28  |                                               |
        |-----------------------------------------------|
    29  |                   N-S CYCLES                  |
    30  |                                               |
        |-----------------------------------------------|
    31  |                 N-S INCREMENTS                |
    32  |                                               |
        |-----------------------------------------------|
    33  | ADDITIONAL LOOKS FOR THIS STAR REPEATS WORDS  |
 16+16J |           17 THRU 32 FOR J LOOKS              |
        |-----------------------------------------------|
     .  | ADDITIONAL STARS AND LOOKS FOR THIS IMC OFFSET|
     .  |      REPEATS FROM WORD 13 TO ABOVE            |
        |-----------------------------------------------|
     .  | ADDITIONAL IMC OFFSETS, STARS, AND LOOKS      |
     .  |      REPEATS FROM WORD 9 TO ABOVE             |
        |-----------------------------------------------|
```

DATA ITEM	FORMAT	VALIDATION	UNITS
START YEAR	BCD	1989 - 2025	YEAR
DAY OF YEAR	BCD	1 - 366	DAY
HOURS	BCD	0 - 23	HOUR
MINUTES	BCD	0 - 59	MINUTE
SECONDS	BCD	0 - 59	SEC
NUMBER OF OFFSET CHANGES	I*4	1-200	N/A
IMC CALIBRATION OFFSET	R*4	-.008 TO +.008	RAD
NO. OF STARS FOR IMC OFFSET	I*4	0-100 (SEE NOTES)	N/A
STAR ID	I*4	-1, 1-9999 (SEE NOTES)	N/A
NO. OF LOOKS FOR STAR	I*4	1-16	N/A
LOOK IN COMMAND SEQUENCE	I*4	1-16	N/A
LOOK DWELL REPEATS	I*4	0-63 (IMAGER)	N/A
		0-15 (SOUNDER)	N/A
COMMAND EXECUTE TIME YEAR	BCD	1989-2025	YEAR
DAY OF YEAR	BCD	1-366	DAY
HOUR	BCD	0-23	HOURS
MINUTE	BCD	0-59	MIN
SECOND	BCD	0-59	SEC
MSEC	BCD	0-999	MSEC
E-W CYCLES	I*4	0-5 (I-M)	CYCLES
	I*4	0-7 (N-P)	CYCLES
E-W INCREMENTS	I*4	0-6135 (IMAGER)	INCREMENTS
		0-2405 (SOUNDER)	INCREMENTS
N-S CYCLES	I*4	0-9	CYCLES
N-S INCREMENTS	I*4	0-6135 (IMAGER)	INCREMENTS
		0-2405 (SOUNDER)	INCREMENTS

Notes:

1. The following are numbers of stars for IMC offset:

   0 - No stars in window, all remaining items for the window are omitted.
   N - Number of stars selected for window star ID = -1 for a Moon sight, and ID = 1 to 9999, for star sight.

Message 75 – IMC Scale Factor Calibration Schedule Response (3 of 3)

2. The message length depends on the number of looks in each sequence and the number of stars for each IMC offset in the IMCCAL window. The message length using the validation limits is given by $8 + N(4 + K(4 + 16J))$. The maximum length is 3,280,808 16-bit half-words when $N = 200$, $K = 100$, and $J = 10$, which exceeds the maximum message length limit. As necessary, multiple messages are transmitted until the entire response is complete. Messages are separated at the offset level. Each frame contains an integral number of offsets and all the nested data associated with those offsets. The total number of messages and the number of offsets in each message depends on the values in the requesting message.

3. The message count and end of message flag in half-word 13 of the header are used to keep track of multiple messages (see Section 4.3.1).

4. Message 75 is multiply nested in the order [offset [star [look]]] for each look at a star, for each star in an offset, and for all offsets in the IMCCAL window.

Message 80 – IMC Scale Factors

OATS send an unsolicited Message 80 to GIMTACS/GTACS after calculating new IMC scale factor offsets. The Message 80 data block layout and field definitions follow.

```
HEADER BLOCK FIELDS:
      MESSAGE SEQUENCE NO.          = 1-65535
      SATELLITE ID                  = 8,9,10,11,12,13,14,15 (I-P)
      SOURCE                        = 41,42,43,44,45,46,47,48,49,50 (I-M OATS)
                                    = 75-85 (N-P OATS)
      DESTINATION                   = 10 (GIMTACS)
                                    = 90-101 (GTACS)
      NO. OF HALF-WORDS             = 4
      MESSAGE TYPE                  = 80
      MESSAGE SUBTYPE               = 1 - IMAGER
                                    = 2 - SOUNDER
      TRACER                        = ASCII BLANKS
      MESSAGE COUNT                 = 1
      END OF MESSAGE                = TRUE
      ROUTING ID                    = N/A

DATA BLOCK LAYOUT:
 HALF-
 WORD NO. MSB                                          LSB
          0  1  2  3  4  5  6  7  8  9 10 11 12 13 14 15
        |-----------------------------------------------|
      1 |      E-W COMPENSATION SCALE FACTOR            |
      2 |                                               |
        |-----------------------------------------------|
      3 |           N-S COMPENSATION                    |
      4 |                 SCALE FACTOR                  |
        |-----------------------------------------------|
```

DATA ITEM	FORMAT	VALIDATION	UNITS
IMC COMPENSATION SCALE FACTORS	R*4	0-1.638	N/A

Notes:

Message 80 is sent unsolicited. It is the product of a special process scheduled in close cooperation with GIMTACS/GTACS.

Message 81 – MMC Scale Factors (GOES I-M)

OATS sends an unsolicited Message 81 to GIMTACS after calculating new MMC scale factors. The Message 81 data block layout and field definitions follow.

```
HEADER BLOCK FIELDS:
      MESSAGE SEQUENCE NO.          = 1-65535
      SATELLITE ID                  = 8,9,10,11,12 (I-M)
      SOURCE                        = 41,42,43,44,45,46,47,48,49,50 (OATS)
      DESTINATION                   = 10 (GIMTACS)
      NO. OF HALF-WORDS             = 18
      MESSAGE TYPE                  = 81
      MESSAGE SUBTYPE               = 0
      TRACER                        = BLANKS
      MESSAGE COUNT                 = 1
      END OF MESSAGE                = TRUE
      ROUTING ID                    = N/A

DATA BLOCK LAYOUT:
 HALF-
 WORD NO. MSB                                          LSB
           0  1  2  3  4  5  6  7  8  9 10 11 12 13 14 15
         |-----------------------------------------------|
      1  |        S/C PITCH MOMENTUM SCALE FACTOR        |
      2  |                                               |
         |-----------------------------------------------|
      3  |         ROLL MMC OUTPUT SCALE FACTOR          |
      4  |                                               |
         |-----------------------------------------------|
      5  |         YAW MMC OUTPUT SCALE FACTOR           |
      6  |                                               |
         |-----------------------------------------------|
      7  |      ROLL MOMENT OF INERTIA SCALE FACTOR      |
      8  |                                               |
         |-----------------------------------------------|
      9  |        YAW MOMENT OF INERTIA SCALE FACTOR     |
     10  |                                               |
         |-----------------------------------------------|
     11  |       PITCH MMC OUTPUT SCALE FACTOR           |
     12  |                                               |
         |-----------------------------------------------|
     13  |       PITCH MOMENT OF INERTIA SCALE FACTOR    |
     14  |                                               |
         |-----------------------------------------------|
     15  |       X-Z INERTIA COUPLING SCALE FACTOR       |
     16  |                                               |
         |-----------------------------------------------|
     17  |       X-Y INERTIA COUPLING SCALE FACTOR       |
     18  |                                               |
         |-----------------------------------------------|
```

DATA ITEM	FORMAT	VALIDATION	UNITS
MMC SCALE FACTORS	R*4	-16.4 TO +16.4	N/A

Message 81 – ISEC Scale Factors (GOES N-P)

OATS sends an unsolicited Message 81 to GTACS after calculating new Instrument Systematic Error Compensation (ISEC) scale factors. The Message 81 data block layout and field definitions are as follows:

```
HEADER BLOCK FIELDS:
      MESSAGE SEQUENCE NO.          = 1-65535
      SATELLITE ID                  = 13,14,15 (N-P)
      SOURCE                        = 75 - 85 (OATS)
      DESTINATION                   = 90 - 101 (GTACS)
      NO. OF HALF-WORDS             = 4
      MESSAGE TYPE                  = 81
      MESSAGE SUBTYPE               = 1 - IMAGER
                                    = 2 - SOUNDER
      TRACER                        = ASCII BLANKS
      MESSAGE COUNT                 = 1
      END OF MESSAGE                = TRUE
      ROUTING ID                    = N/A

DATA BLOCK LAYOUT:
     HALF-     MSB                                                LSB
     WORD NO.  0   1   2   3   4   5   6   7   8   9  10  11  12  13  14  15
        1
        2      EAST-WEST ISEC SCALE FACTOR
        3
        4      NORTH-SOUTH ISEC SCALE FACTOR
```

DATA ITEM	FORMAT	VALIDATION	UNITS
ISEC COMPENSATION SCALE FACTORS	R*4	-0.001 to +0.001	rad/rad

Notes:

1. This message is sent unsolicited.
2. At this time, the North-South ISEC scale factor will always be 0.0.

Message 82 – OATS Response Error Text (GOES N-P Only)

OATS sends the Scheduler workstation a Message 82 whenever OATS cannot fulfill a request. The message contains an ASCII text message detailing the reason for the failure. The Message 82 data block layout and field definitions are as follows:

```
HEADER BLOCK FIELDS:
      MESSAGE SEQUENCE NO.          = 1-65535
      SATELLITE ID                  = 13,14,15 (N-P)
      SOURCE                        = 75 - 85 (OATS)
      DESTINATION                   = 90 - 101 (GTACS)
      NO. OF HALF-WORDS             = 40
      MESSAGE TYPE                  = 82
      MESSAGE SUBTYPE               = 0
      TRACER                        = ASCII BLANKS
      MESSAGE COUNT                 = 1
      END OF MESSAGE                = TRUE
      ROUTING ID                    = N/A

DATA BLOCK LAYOUT:
     HALF-     MSB                                                LSB
     WORD NO.   0   1   2   3   4   5   6   7   8   9  10  11  12  13  14  15
         1    +-------------------------------------------------------------+
         :    |                  RESPONSE ERROR MESSAGE                     |
        40    +-------------------------------------------------------------+
```

DATA ITEM	FORMAT	VALIDATION	UNITS
RESPONSE ERROR MESSAGE	ASCII	N/A	N/A

Message 85 – MMC Calibration Data Request (GOES I-M) (1 of 2)

OATS sends an unsolicited Message 85 to GIMTACS whenever it needs telemetry data relating to the MMC calibration. The Message 85 data block layout and field definitions follow.

```
HEADER BLOCK FIELDS:
      MESSAGE SEQUENCE NO.          = 1-65535
      SATELLITE ID                  = 8,9,10,11,12 (I-M)
      SOURCE                        = 41,42,43,44,45,46,47,48,49,50 (OATS)
      DESTINATION                   = 10 (GIMTACS)
      NO. OF HALF-WORDS             = UP TO 224 (SEE NOTES)
      MESSAGE TYPE                  = 85
      MESSAGE SUBTYPE               = 1 - PID REQUEST
      TRACER                        = UNIQUE ID SUPPLIED BY OATS
      MESSAGE COUNT                 = 1
      END OF MESSAGE                = TRUE
      ROUTING ID                    = N/A

DATA BLOCK LAYOUT:
 HALF-
 WORD NO. MSB                                          LSB
           0  1  2  3  4  5  6  7  8  9 10 11 12 13 14 15
          |-----------------------------------------------|
      1   |                     YEAR                      |
          |-----------------------------------------------|
      2   |         DAY OF YEAR           |  HR (10s)     |
          |-----------------------------------------------|
      3   |  HR (1s)  |        MINUTES        |  SEC (10s)|
          |-----------------------------------------------|
      4   |  SEC (1s) |               MSECS               |
          |-----------------------------------------------|
      5   |               DATA SPAN DURATION              |
      6   |
          |-----------------------------------------------|
      7   |      NUMBER OF DATA SETS IN REQUEST (N)       |
      8   |
          |-----------------------------------------------|
      9   |         RESPONSE SUBTYPE FOR SET NO.1         |
     10   |   (MESSAGE SUBTYPE TO BE USED IN RESPONSE)    |
          |-----------------------------------------------|
     11   |     DATA THINNING CONSTANT FOR SET NO.1       |
     12   |
          |-----------------------------------------------|
     13   |       NUMBER OF PIDS IN DATA SET NO.1 (M)     |
     14   |
          |-----------------------------------------------|
     15   |
      .   |        LIST OF M PIDS FOR DATA SET NO.1       |
  14+2M   |
          |-----------------------------------------------|
  15+2M   |         RESPONSE SUBTYPES, DATA THINNING      |
      .   |         CONSTANTS, NUMBER OF PIDS, AND PID    |
      .   |             LISTS FOR DATA SETS 2-N           |
     8+   |
 N(6+2M)  |-----------------------------------------------|

                                                  DATA
                                                  START
                                                  TIME
```

Message 85 – MMC Calibration Data Request (2 of 2)

DATA ITEM	FORMAT	VALIDATION	UNITS
FRAME START TIME OF YEAR	BCD	1989-2025	YEAR
DAY OF YEAR	BCD	1-366	DAY
HOUR	BCD	0-23	HOURS
MINUTES	BCD	0-59	MIN
SECONDS	BCD	0-59	SEC
MSEC	BCD	0-999	MSEC
DATA SPAN DURATION	R*4	1-120	MIN
NUMBER OF DATA SETS	I*4	0-12	N/A
RESPONSE SUBTYPE	I*4	6,7	N/A
DATA THINNING CONSTANTS	I*4	1-120	N/A
NUMBER OF PIDS IN SET	I*4	1-6	N/A
DATA PIDS	I*4	1-9999	N/A

Notes:

1. The time stamp is the time that the response was generated.

2. The following are OATS node numbers:
   41 = SOAT01 42 = SOAT02
   43 = SOAT03 44 = SOAT04
   45 = SOAT05 46 = SOAT06
   47 = COAT01 48 = COAT02
   49 = GOAT01 50 = GOAT02

3. The message length varies with the number of data sets in the message and the number of PIDs in each data set, a flexible format chosen to facilitate future changes. The message length is given by $8 + N(6 + 2M)$, with a maximum length of 224 16-bit half-words when $N = 12$ and $M = 6$.

4. A PID is a unique identifier associated with a single telemetry parameter. Every parameter is assumed to have a unique PID. The following lists the parameters required for MMC calibration along with their description and location in the PCM frame:

Parameter	TLM Word	PID
DIRA Accumulated Roll Data	26, 27 (AOCS Format No.1)	0031
DIRA Accumulated Pitch Data	31, 32 (AOCS Format No.1)	0082
DIRA Accumulated Yaw Data	33, 34 (AOCS Format No.1)	0103
Momentum Wheel No. 1 Speed	33, 34	0104
Momentum Wheel No. 2 Speed	26, 27	0032

5. The tracer is expected to be returned unchanged in the response message for identification.

6. The thinning constant indicates that only every K^{th} value of the parameter is to be returned, where K is the thinning constant value with respect to the location of the parameter in the telemetry stream minor or major frame.

7. The response subtype (half-word 9) is specified for requested telemetry data only. It is used internally by OATS and does not need to be used by GIMTACS to identify the data requested. However, GIMTACS must echo this subtype in its Message 185.

Message 87 – SMC Data Request (GOES I-M) (1 of 2)

OATS sends an unsolicited Message 87 to GIMTACS whenever it needs SMC-related telemetry data. The Message 87 data block layout and field definitions follow.

```
HEADER BLOCK FIELDS:
      MESSAGE SEQUENCE NO.          = 1-65535
      SATELLITE ID                  = 8,9,10,11,12 (I-M)
      SOURCE                        = 41,42,43,44,45,46,47,48,49,50 (OATS)
      DESTINATION                   = 10 (GIMTACS)
      NO. OF HALF-WORDS             = UP TO 28 (SEE NOTES)
      MESSAGE TYPE                  = 87
      MESSAGE SUBTYPE               = 1 - PID REQUEST
      TRACER                        = UNIQUE ID SUPPLIED BY OATS
      MESSAGE COUNT                 = 1
      END OF MESSAGE                = TRUE
      ROUTING ID                    = N/A

DATA BLOCK LAYOUT:
 HALF-
 WORD NO. MSB                                          LSB
           0  1  2  3  4  5  6  7  8  9 10 11 12 13 14 15
          |-----------------------------------------------|
      1   |                     YEAR                      |
          |-----------------------------------------------|
      2   |         DAY OF YEAR            |  HR (10s)   |
          |-----------------------------------------------|
      3   |  HR (1s)  |        MINUTES      |  SEC (10s)  |
          |-----------------------------------------------|
      4   |  SEC (1s) |               MSECS               |
          |-----------------------------------------------|
      5   |               DATA SPAN DURATION              |
      6   |
          |-----------------------------------------------|
      7   |      NUMBER OF DATA SETS (N) IN REQUEST       |
      8   |
          |-----------------------------------------------|
      9   |         RESPONSE SUBTYPE FOR SET NO.1         |
     10   |  (MESSAGE SUBTYPE TO BE USED IN RESPONSE)     |
          |-----------------------------------------------|
     11   |     DATA THINNING CONSTANT FOR SET NO.1       |
     12   |
          |-----------------------------------------------|
     13   |       NUMBER OF PIDS (M) IN DATA SET NO.1     |
     14   |
          |-----------------------------------------------|
     15   |
      .   |        LIST OF M PIDS FOR DATA SET NO.1       |
  14+2M   |
          |-----------------------------------------------|
  15+2M   |         RESPONSE SUBTYPES, DATA THINNING      |
      .   |         CONSTANTS, NUMBER OF PIDS, AND PID    |
      .   |             LISTS FOR DATA SETS 2-N           |
    8+    |
 N(6+2M)  |-----------------------------------------------|

                                                  DATA
                                                  START
                                                  TIME
```

Message 87 – SMC Data Request (2 of 2)

DATA ITEM	FORMAT	VALIDATION	UNITS
FRAME START TIME YEAR	BCD	1989-2025	YEAR
DAY OF YEAR	BCD	1-366	DAY
HOUR	BCD	0-23	HOURS
MINUTES	BCD	0-59	MIN
SECONDS	BCD	0-59	SEC
MSEC	BCD	0-999	MSEC
DATA SPAN DURATION	R*4	REQUEST DEPENDENT	MIN
NUMBER OF DATA SETS	I*4	1	N/A
RESPONSE SUBTYPE	I*4	10	N/A
DATA THINNING CONSTANTS	I*4	1-120	N/A
NUMBER OF PIDS IN SET	I*4	7	N/A
DATA PIDS	I*4	1-9999	N/A

Notes:

1. The time stamp is the time that the response was generated.

2. The following are OATS node numbers:

41 = SOAT01	42 = SOAT02
43 = SOAT03	44 = SOAT04
45 = SOAT05	46 = SOAT06
47 = COAT01	48 = COAT02
49 = GOAT01	50 = GOAT02

3. The message length varies with the number of data sets in the message and the number of PIDs in each data set, a flexible format chosen to facilitate future changes. The message length is given by $8 + N(6 + 2M)$, with a maximum length of 28, sixteen-bit half-words when $N = 1$ and $M = 7$.

4. A PID is a unique identifier associated with a single telemetry parameter. Every parameter is assumed to have a unique PID. The following lists the parameters required for SMC calibration along with their description and location in the PCM frame:

Parameter	TLM Word	PID
Momentum Wheel No. 1 Speed	33, 34 (AOCS Format No. 2)	0104
Momentum Wheel No. 2 Speed	26, 27 (AOCS Format No. 2)	0032
Reaction Wheel No. 1 Speed	26, 37 (AOCS Format No. 2)	0034
Reaction Wheel No. 2 Speed	33, 34 (AOCS Format No. 2)	0105
Momentum Wheel Carry Bit	31 (AOCS Format No. 2)	0410
SADA Sun Angle	100-06 Bits 1-8	7623
DSS Pitch	35-6 bits 7-8	
	35-7 Bits 1-7	0415

5. The tracer is expected to be returned unchanged in the response message for identification.

6. The thinning constant indicates that only every Kth value of the parameter is to be returned, where K is the thinning constant value with respect to the location of the parameter in the minor or major frame telemetry stream.

7. The response subtype is specified for requested telemetry data only. It is used internally by OATS and does not need to be used by GIMTACS to identify the data requested. However, GIMTACS must echo this response subtype in its Message 187.

Message 88 – Thermal Snap Data Request (GOES I-M Only) (1 of 2)

OATS sends an unsolicited Message 88 to GIMTACS whenever it needs thermal snap-related telemetry data. The Message 88 data block layout and field definitions follow.

```
HEADER BLOCK FIELDS:
      MESSAGE SEQUENCE NO.          = 1-65535
      SATELLITE ID                  = 8,9,10,11,12 (I-M)
      SOURCE                        = 41,42,43,44,45,46,47,48,49,50 (OATS)
      DESTINATION                   = 10 (GIMTACS)
      NO. OF HALF-WORDS             = 20 (SEE NOTES)
      MESSAGE TYPE                  = 88
      MESSAGE SUBTYPE               = 1 - PID REQUEST
      TRACER                        = UNIQUE ID SUPPLIED BY OATS
      MESSAGE COUNT                 = 1
      END OF MESSAGE                = TRUE
      ROUTING ID                    = N/A

DATA BLOCK LAYOUT:
 HALF-
 WORD NO. MSB                                          LSB
           0  1  2  3  4  5  6  7  8  9 10 11 12 13 14 15
          |-----------------------------------------------|
      1   |                      YEAR                     |
          |-----------------------------------------------|
      2   |  |         DAY OF YEAR            | HR (10s)  |
          |-----------------------------------------------|
      3   | HR (1s)   |        MINUTES         | SEC (10s) |
          |-----------------------------------------------|
      4   | SEC (1s)  |               MSECS                |
          |-----------------------------------------------|
      5   |               DATA SPAN DURATION               |
      6   |
          |-----------------------------------------------|
      7   |      NUMBER OF DATA SETS (N) IN REQUEST        |
      8   |
          |-----------------------------------------------|
      9   |         RESPONSE SUBTYPE FOR SET NO.1          |
     10   |    (MESSAGE SUBTYPE TO BE USED IN RESPONSE)    |
          |-----------------------------------------------|
     11   |       DATA THINNING CONSTANT FOR SET NO.1      |
     12   |
          |-----------------------------------------------|
     13   |       NUMBER OF PIDS (M) IN DATA SET NO.1      |
     14   |
          |-----------------------------------------------|
     15   |
      .   |        LIST OF M PIDS FOR DATA SET NO.1        |
  14+2M   |
          |-----------------------------------------------|
  15+2M   |         RESPONSE SUBTYPES, DATA THINNING       |
      .   |        CONSTANTS, NUMBER OF PIDS, AND PID      |
      .   |            LISTS FOR DATA SETS 2-N             |
     8+   |
 N(6+2M)  |-----------------------------------------------|

                                                  DATA
                                                  START
                                                  TIME
```

Message 88 – Thermal Snap Data Request (2 of 2)

DATA ITEM	FORMAT	VALIDATION	UNITS
FRAME START TIME YEAR	BCD	1989-2025	YEAR
DAY OF YEAR	BCD	1-366	DAY
HOUR	BCD	0-23	HOURS
MINUTES	BCD	0-59	MIN
SECONDS	BCD	0-59	SEC
MSEC	BCD	0-999	MSEC
DATA SPAN DURATION	R*4	REQUEST DEPENDENT	MIN
NUMBER OF DATA SETS	I*4	1	N/A
RESPONSE SUBTYPE	I*4	11	N/A
DATA THINNING CONSTANTS	I*4	1-120	N/A
NUMBER OF PIDS IN SET	I*4	3	N/A
DATA PIDS	I*4	1-9999	N/A

Notes:

1. The time stamp is the time that the response was generated.

2. The following are OATS node numbers:
   41 = SOAT01 42 = SOAT02
   43 = SOAT03 44 = SOAT04
   45 = SOAT05 46 = SOAT06
   47 = COAT01 48 = COAT02
   49 = GOAT01 50 = GOAT02

3. The message length varies with the number of data sets in the message and the number of PIDs in each data set, a flexible format chosen to facilitate future changes. The message length is given by $8 + N(6 + 2M)$, with a maximum length of 20 16-bit half-words when $N = 1$ and $M = 3$.

4. A PID is a unique identifier associated with a single telemetry parameter. Every parameter is assumed to have a unique PID. The following lists the parameters required for SMC calibration along with their descriptions and locations in the PCM frame:

Parameter	TLM Word	PID
Earth Sensor roll data	A2RLESDT	55
Imager BB-Cal Status	IBBCALPS	4035
Sounder BB-Cal Status	SBBCALPS	4523

5. The tracer is expected to be returned unchanged in the response message for identification.

6. The thinning constant indicates that only every K^{th} value of the parameter is to be returned, where K is the thinning constant value with respect to the location of the parameter in the telemetry stream minor or major frame.

7. The response subtype is specified for requested telemetry data only. It is used internally by OATS and does not need to be used by GIMTACS to identify the data requested. However, GIMTACS must echo this subtype in its Message 188.

4.3.7 GIMTACS/GTACS-Originated Messages

GIMTACS/GTACS originated messages are listed below in the order in which their detailed descriptions are provided in this section. Message Type and Subtype appear in the lower right hand corner of these pages to assist in easy identification of the pages describing a specific message.

Type	Description	Destination
110-1	SPS Configuration Control – Offline	SPS
110-2	SPS Configuration Control – Online	SPS
110-3	SPS Configuration Control – Operate	SPS
110-4	SPS Configuration Control – Configure	SPS
110-5	SPS Configuration Control – Idle	SPS
110-6	SPS Configuration Control – Start O&A	SPS
110-7	SPS Configuration Control – Start Imager NLUT	SPS
110-8	SPS Configuration Control – Start Sounder NLUT	SPS
110-9	SPS Configuration Control – Start CORT	SPS
111	SPS Status Request	SPS
112	GIMTACS/GTACS Text Message	SPS
113	AVS/ADS Telemetry Rate Control	MRS&S
114-1	MRS&S Status Request	MRS&S
115	MDL Telemetry Message Rate Control	MRS&S
123	PM Status Request	PM
151	Star View Command Parameter Request	OATS
153	IMC, SMC, or SCC Coefficient Request	OATS
154	OATS Health and Status Request	OATS
155	Scan Frame Request	OATS
159	Eclipse Prediction Request	OATS
160	Sensor Intrusion Request	OATS
164	IMC, SMC, or SCC Set Enabled or Yaw Flip State	OATS
165	IMC/MMC Status Change	OATS
166	DIRA Data Response	OATS
167	Trim Tab Data Response	OATS
170	Propulsion Data Response	OATS
175	IMC Scale Factor Calibration Schedule Request	OATS
176	DIRA Data Completion	OATS
177	Trim Tab Data Completion	OATS
180	Propulsion Data Completion	OATS
185	MMC Calibration Data Response	OATS
187	SMC Data Response	OATS
188	Thermal Snap Response	OATS
190	S/C Equipment Status	OATS
195	MMC Calibration Data Completion	OATS
197	SMC Data Completion	OATS
198	Thermal Data Completion	OATS
202	Labeled Star Measurement	OATS
205	Single Chord Notification	OATS

Message 110 – SPS Configuration Control

GIMTACS/GTACS has the capability of controlling the SPS state and configuration through the use of the SPS configuration control message. Listed below are descriptions of Messages 110-1 through 110-9. The descriptions include the contents of each message subtype and the layout of the data blocks for the CONFIGURE, START O&A, START IMAGER NLUT, START SOUNDER NLUT, and START IMAGER CORT commands. Included in the Message 110-4 description are Table 4-13, SPS Configuration Bit Map and Items, and
Table 4-14, GIMTACS/GTACS -to-SPS Command Timing Constraints. None of the other configuration control commands have a data block. The Message 110 data block layouts and field definitions follow.

Message 110-1 – SPS Configuration Control – Offline Command

```
HEADER BLOCK FIELDS:
      MESSAGE SEQUENCE NO.          = 1-65535
      SATELLITE ID                  = 8,9,10,11,12,13,14,15 (I-P)
      SOURCE                        = 10 (GIMTACS)
                                    = 90-101 (GTACS)
      DESTINATION                   = 20,21,22,23,24,25,26,27,28 (SPS)
      NO. OF HALF-WORDS             = 0
      MESSAGE TYPE                  = 110
      MESSAGE SUBTYPE               = 1 (OFFLINE COMMAND): INHIBIT PROCESSING
                                      OF ANY OTHER GIMTACS/GTACS MESSAGES
                                      (EXCEPT ON LINE)
      TRACER                        = ASCII BLANKS
      MESSAGE COUNT                 = 1
      END OF MESSAGE                = 255
      ROUTING ID                    = N/A

DATA BLOCK LAYOUT:  N/A
```

Notes:

The offline command is executed immediately by the SPS. If the SPS is in Operate (OPR) mode, the corresponding status would normally be reported in the next Message 10. Due to the asynchronous timing relationship, offline status could be reported in the second Message 10.

Message 110-2 – SPS Configuration Control – Online Command

```
HEADER BLOCK FIELDS:
      MESSAGE SEQUENCE NO.          = 1-65535
      SATELLITE ID                  = 8,9,10,11,12,13,14,15 (I-P)
      SOURCE                        = 10 (GIMTACS)
                                    = 90-101 (GTACS)
      DESTINATION                   = 20,21,22,23,24,25,26,27,28 (SPS)
      NO. OF HALF-WORDS             = 0
      MESSAGE TYPE                  = 110
      MESSAGE SUBTYPE               = 2 (ONLINE COMMAND): ALLOW PROCESSING OF
                                        ALL GIMTACS/GTACS MESSAGES
      TRACER                        = ASCII BLANKS
      MESSAGE COUNT                 = 1
      END OF MESSAGE                = 255
      ROUTING ID                    = N/A

DATA BLOCK LAYOUT:  N/A
```

Notes:

The online command is executed immediately by the SPS. If the SPS is in OPR mode, the corresponding status would normally be reported in the next Message 10. Due to the asynchronous timing relationship, offline status could be reported in the second Message 10.

Message 110-3 – SPS Configuration Control – Operate Command

```
HEADER BLOCK:
      MESSAGE SEQUENCE NO.          = 1-65535
      SATELLITE ID                  = 8,9,10,11,12,13,14,15 (I-P)
      SOURCE                        = 10 (GIMTACS)
                                    = 90-101 (GTACS)
      DESTINATION                   = 20,21,22,23,24,25,26,27,28 (SPS)
      NO. OF HALF-WORDS             = 0
      MESSAGE TYPE                  = 110
      MESSAGE SUBTYPE               = 3 (OPERATE COMMAND):  ENTER OPR STATE
      TRACER                        = ASCII BLANKS
      MESSAGE COUNT                 = 1
      END OF MESSAGE                = 255
      ROUTING ID                    = N/A

DATA BLOCK LAYOUT:  N/A
```

Notes:

The operate command is executed immediately by SPS. Status is nominally reported in the very next Message 10 sent to GIMTACS/GTACS every 10 seconds. However, the report could occur in a following Message 10 due to the asynchronous timing relationship.

Message 110-4 – SPS Configuration Control – Configure Command (1 of 6)

```
HEADER BLOCK FIELDS:
      MESSAGE SEQUENCE NO.          = 1-65535
      SATELLITE ID                  = 8,9,10,11,12,13,14,15 (I-P)
      SOURCE                        = 10 (GIMTACS)
                                    = 90-101 (GTACS)
      DESTINATION                   = 20,21,22,23,24,25,26,27,28 (SPS)
      NO. OF HALF-WORDS             = UP TO 54
      MESSAGE TYPE                  = 110
      MESSAGE SUBTYPE               = 4 (CONFIGURE COMMAND):  SEE DATA
                                        ITEM DEFINITION AND NOTES.
      TRACER                        = ASCII BLANKS
      MESSAGE COUNT                 = 1
      END OF MESSAGE                = 255
      ROUTING ID                    = N/A

DATA BLOCK LAYOUT:
   HALF-
   WORD NO. MSB                                          LSB
            0  1  2  3  4  5  6  7  8  9 10 11 12 13 14 15
           |-----------------------------------------------|
        1  |                                               |
        .  |                  BIT MAP                      |
        6  |                                               |
           |-----------------------------------------------|
        7  |                                               |
        .  |                 DATA ITEMS                    |
       N+6 |                                               |
           |-----------------------------------------------|
```

DATA ITEM	FORMAT	VALIDATION	UNITS
BIT MAP	BINARY	(SEE NOTES)	N/A
ANTENNA ID	BINARY	1-8 (I-M)	N/A
	BINARY	1-10 (N-P)	N/A
MSG. TYPE 11 INTERVAL	BINARY	1-10	SEC
SCAN CLAMP LIMB CLIPPING OFFSET	BINARY	0-30	0.1 DEG
SATELLITE ID	BINARY	8-12 (I-M)	N/A
	BINARY	13-16 (N-P)	N/A
ULI INPUT CHANNEL	BINARY	1-3	N/A
RANGING FUNCTION	BINARY	0 - DISABLE 1 - ENABLE	N/A
IMGR/SDR IMC ON/OFF	BINARY	0 - OFF 1 - ON	N/A
RANGE MEASUREMENTS	BINARY	1-2 OR 5	N/A
IMAGER CO-REGISTRATION	BINARY	0 - DISABLE 1 - ENABLE	N/A
OPERATIONAL MODE - IMAGER	BINARY	1 – ROUTINE/NORMAL 2 – RAPID/RSO 3 – SUPERRAP/SRSO 4 - TEST	N/A
IMAGER VIS NORM	BINARY	0 - DISABLE 1 - ENABLE	N/A
IMAGER IR CALIBRATION	BINARY	0 - DISABLE 1 - ENABLE	N/A

Message 110-4 – SPS Configuration Control – Configure Command (2 of 6)

IMAGER IR BIAS CAL MODE	BINARY	1	N/A
IMAGER SDI CHANNEL	BINARY	1-4	N/A
IMAGER ELEC CONFIG	BINARY	1-2	N/A
IMAGER DET SUBSTIT	BINARY	1-15 (I-M)	N/A
	BINARY	1-16 (N-P)	N/A
IMAGER IR GAIN 1 CAL MODE		1-7	N/A
IMAGER IR GAIN 2 CAL MODE		1-3	N/A
IMAGER E-W CORRECTION	BINARY	0 - DISABLE 1 - ENABLE	N/A
OPERATIONAL MODE - SOUNDER	BINARY	1 – ROUTINE/NORMAL 2 – RAPID/RSO 3 – SUPERRAP/SRSO 4 - TEST	N/A
SOUNDER VIS NORM	BINARY	0 - DISABLE 1 - ENABLE	N/A
SOUNDER IR CALIBR	BINARY	0 - DISABLE 1 - ENABLE	N/A N/A
SOUNDER IR BIAS CAL MODE	BINARY	1-2	N/A
SOUNDER SDI CHANNEL	BINARY	1-4	N/A
SOUNDER ELEC CONFIG	BINARY	1-2	N/A
SOUNDER IR GAIN 1 CAL MODE		1-7	N/A
SOUNDER IR GAIN 2 CAL MODE		1-3	N/A
SOUNDER E-W CORRECTION	BINARY	0 - DISABLE 1 – ENABLE	N/A
IMAGER RELATIVIZATION	BINARY	0 – DISABLE 1 – ENABLE	N/A
SOUNDER RELATIVIZATION	BINARY	0 – DISABLE 1 – ENABLE	N/A
SPS YAW FLIP PROCESSING	BINARY	0 - DISABLE 1 – ENABLE	N/A
IMAGER DET SUB, 8th IR DET	BINARY	1-16	N/A
RESAMPLING	BINARY	0 – DISABLE 1 – ENABLE	N/A N/A

Notes:

1. The bit map designates which data items are present in the data block. Each bit corresponds to a different item. If the bit is set, the data is present. The order of the data items corresponds to the order of the set bits in the bit map. Bit map assignments are shown in Table 4-13. As in the message header, satellite IDs 8 through 12 correspond to GOES I-M and satellite IDs 13-16 correspond to GOES N-P.

2. A one-time normal range measurement may be initiated (equals 2); a normal range measurement response is generated for delivery to OATS (see Message 1).

3.

4. Table 4-14 provides the GIMTACS/GTACS-to-SPS command timing constraints.

Message 110-4 – SPS Configuration Control – Configure Command (3 of 6)

4. Bias calibration mode definitions are as follows:

Mode	Definition
1	Standard algorithm bias computed at spacelook
2	Bias updated based on history of bias versus optics temperatures (Sounder only)

5. First-order gain calibration mode definitions are as follows:

Mode	Definition
1	Standard algorithm gain computed at BB event
2	Gain updated as a function of patch temperature
3	Diurnally averaged gain
4	Gain updated based on history of gain versus temperatures
5	Mode 3 and 4 combined
6	Gain updated as a function of time (linear algorithm)
7	Gain updated as a function of time (quadratic algorithm)

6. Second-order gain calibration mode definitions are as follows:

Mode	Definition
1	Factory measured terms
2	Gain interpolated as a function of patch temperature
3	Gain interpolated as a function of patch and baseplate temperatures

7. For Imager or Sounder electronic configuration, 1 = side one, and 2 = side two.

8. Resampling Active/Inactive should be primarily controlled by the SPS operator regardless of GIMTACS being OFFLINE/ ONLINE.

Message 110-4 – SPS Configuration Control – Configure Command (4 of 6)

Table 4-13. SPS Configuration Bit Map and Items

Bit	Data Item	No. of Bits
0 - 7	Spares - not used	32
8	Antenna ID	16
9	Message 11 Interval - Imager	16
10	Message 11 Interval - Sounder	16
11 - 14	Spares - not used	16
15	Scan Clamp Frame Limb Offset	16
16	Satellite ID	8
17	Uplink Interface (ULI) Input Channel	8
18	Ranging Function Enable or Disable	8
19	Imager IMC On or Off	8
20	Sounder IMC On or Off	8
21	Perform Range Measurements	8
22	Imager Co-registration Enable or Disable	8
23	Imager Instrument Mode	8
24	Imager VIS Normalization Enable or Disable	8
25	Imager IR Calibration Enable or Disable	8
26	Imager IR Bias Calibration Mode	8
27	Imager SDI Channel	8
28	Imager Electronic Configuration	8
29 - 43	Imager Detector Substitutions	8
44	Imager Gain 1 Calibration Mode	8
45	Imager Gain 2 Calibration Mode	8
46	Imager E-W Correction Enable or Disable	8
47	Sounder Instrument Mode	8
48	Sounder VIS Normalization Enable or	8
49	Sounder IR Calibration Enable or Disable	8
50	Sounder IR Calibration Mode	8
51	Sounder SDI Channel	8
52	Sounder Detector Configuration	8
53	Sounder Gain 1 Calibration Mode	8
54	Sounder Gain 2 Calibration Mode	8
55	Sounder E-W Correction Enable or Disable	8
56	Imager Relativization Enable or Disable	8
57	Sounder Relativization Enable or Disable	8
58	SPS Yaw Flip Processing Enable or Disable	8
59	Imager Detector Substitution, 8th IR detector	8
60	Resampling Enable or Disable	8
61 - 63	Spares - not used	8

Message 110-4 – SPS Configuration Control – Configure Command (5 of 6)

Notes:

1. The scan clamp frame limb offset establishes the distance E-W from the equatorial limb of the Earth that the SPS clips to crop space data from the GVAR transmission. A value of 30 (3˚) means that image cropping occurs for data lying in excess of 3˚ from the plane tangent to the Earth's equatorial limb. Cropping is performed only on the spacelook side selected for the instrument.

2. The 15 bits set aside in bits 29-43 for Imager detector substitutions correspond to eight visible and seven IR detectors. Bit 59 corresponds to the eighth IR detector (IR Channel 6, Detector 2 for GOES-O and beyond). If a detector's bit is set in the bit map, a detector number is provided in the data items indicating which detector is to be the data source for the substitution. A detector number of zero indicates substitution is to be canceled for the detector whose bit was set in the bit map. Detector numbers are assigned as follows:

Detector No.	Detector, S/C 8-11	S/C 12 and 13	Bit No. (In Bit Map)
1-8	Visible 1-8	Visible 1-8	29-36
9	IR channel 2, Detector 1	IR channel 2, Detector 1	37
10	IR channel 2, Detector 2	IR channel 2, Detector 2	38
11	IR channel 3	IR channel 3, Detector 1	39
12	IR channel 4, Detector 1	IR channel 3, Detector 2	40
13	IR channel 4, Detector 2	IR channel 4, Detector 1	41
14	IR channel 5, Detector 1	IR channel 4, Detector 2	42
15	IR channel 5, Detector 2	IR channel 6, Detector 1	43

Detector No.	Detector, S/C 14 and Beyond	Bit No. (In Bit Map)
1-8	Visible 1-8	29-36
9	IR channel 2, Detector 1	37
10	IR channel 2, Detector 2	38
11	IR channel 3, Detector 1	39
12	IR channel 3, Detector 2	40
13	IR channel 4, Detector 1	41
14	IR channel 4, Detector 2	42
15	IR channel 6, Detector 1	43
16	IR channel 6, Detector 2	59

Table 4-14. GIMTACS/GTACS-to-SPS Command Timing Constraints

Control Point Description	Execution Time Conditions
Configure:	
Antenna ID	Immediate
Message Type 11 Interval	Immediate
Scan Clamp Frame Limb Offset	Immediate; effective start of next frame
Satellite ID	Six minutes if configured for new satellite
ULI Input Channel	Immediate if in IDLE
Range Enable or Disable	Immediate
Imager or Sounder IMC On or Off	Immediate; effective start of next frame
Satellite Range (2)	Immediate if Calibration range is inactive
Co-registration Enable or Disable	Immediate; effective start of next frame
Operational Mode (Imager or Sounder)	Immediate; effective in next output scan
Imager VIS Normal IR Calibration	Immediate; effective in next SDI input scan
Imager IR Calibration mode	Immediate; effective at next Calibration event
Imager SDI Channel	Immediate if in IDLE; else ignored
Imager ELEC Configuration	Six minutes if new side commanded and in IDLE

Message 110-4 – SPS Configuration Control – Configure Command (6 of 6)

Control Point Description	Execution Time Conditions
Imager Detector Substitution	Immediate; effective in next input scan
Imager Relativization	Immediate; effective in next input scan
Imager E-W Correction Enable or Disable	Immediate; effective at next BB-Cal event
Sounder VIS Normal IR Calibration	Immediate; effective in next input scan
Sounder IR Calibration Mode	Immediate; effective at next Calibration event
Sounder SDI Channel	Immediate if in IDLE; else ignored
Sounder E-W Correction Enable or Disable	Immediate; effective at next BB-Cal event
Sounder ELEC Configuration	6 minutes if new side commanded and in IDLE
Sounder Relativization	Immediate; effective in next input scan
Yaw flip processing	Immediate if in IDLE; else ignored
Resampling	Immediate; effective start of next frame

Notes:

1. The SPS ignores GIMTACS/GTACS configure commands received while reconfiguring in response to a previous configure command. Control points responded to immediately are of no concern. Precautions should be implemented because of several points requiring significant reconfiguration time (e.g., Sounder ELEC CONFIG, Imager ELEC CONFIG, etc). Therefore, GIMTACS/GTACS is required to verify each reconfiguration through the SPS health and status Message 10 prior to issuing the next reconfiguration message.

2. In the worst case, the corresponding status is received in the second SPS Message 10 for immediate responses if in the OPR mode.

3. Corresponding status of configuration actions requiring a 6-minute response time will appear in a subsequent SPS Message 10 during the 6-minute response time.

4. (GOES N-P) Antenna IDs have a range from 1 to 10 as follows:
   1 = 18 m/60 ft “A” antenna
   2 = 18 m/60 ft “B” antenna
   3 = 13 m/40 ft “C” antenna
   4 = 14 m/45 ft “G” tracking antenna
   5 = 16.4m/55 ft “J” antenna (hurricane rated)
   6 = 16.4m/55 ft “K” antenna (hurricane rated)
   7 = 16.4m/55 ft “L” antenna (hurricane rated) WBU
   8 = 21m/69ft antenna FCDA
   9 = unused
   10 = unused

Message 110-5 – SPS Configuration Control – IDLE Command

```
HEADER BLOCK FIELDS:
      MESSAGE SEQUENCE NO.          = 1-65535
      SATELLITE ID                  = 8,9,10,11,12,13,14,15 (I-P)
      SOURCE                        = 10 (GIMTACS)
                                    = 90-101 (GTACS)
      DESTINATION                   = 20,21,22,23,24,25,26,27,28 (SPS)
      NO. OF HALF-WORDS             = 0
      MESSAGE TYPE                  = 110
      MESSAGE SUBTYPE               = 5 (IDLE COMMAND):  ENTER IDLE STATE
      TRACER                        = ASCII BLANKS
      MESSAGE COUNT                 = 1
      END OF MESSAGE                = 255
      ROUTING ID                    = N/A

DATA BLOCK LAYOUT:  N/A
```

Notes:

The IDLE command is executed immediately by the SPS. To verify execution, GIMTACS/GTACS requests that the SPS provide status. The SPS responds to with a Message 10.

Message 110-6 – SPS Configuration Control – Start O&A Command

```
HEADER BLOCK FIELDS:
      MESSAGE SEQUENCE NO.          = 1-65535
      SATELLITE ID                  = 8,9,10,11,12,13,14,15 (I-P)
      SOURCE                        = 10 (GIMTACS)
                                    = 90-101 (GTACS)
      DESTINATION                   = 20,21,22,23,24,25,26,27,28 (SPS)
      NO. OF HALF-WORDS             = 8
      MESSAGE TYPE                  = 110
      MESSAGE SUBTYPE               = 6 (START O&A COMMAND):  BEGIN USING
                                        SPECIFIED O&A AT NEXT START-OF-FRAME.
      TRACER                        = ASCII BLANKS
      MESSAGE COUNT                 = 1
      END OF MESSAGE                = 255
      ROUTING ID                    = N/A

DATA BLOCK LAYOUT:
   HALF-
   WORD NO. MSB                                          LSB
            0  1  2  3  4  5  6  7  8  9 10 11 12 13 14 15
           |-----------------------------------------------|
        1  |                     IMC SET                   |
        2  |                    IDENTIFIER                 |
           |-----------------------------------------------|
        3  |                                               |
        .  |                      SPARE                    |
        8  |                                               |
           |-----------------------------------------------|
```

DATA ITEM	FORMAT	VALIDATION	UNITS
O&A ID	ASCII	ANNN	N/A

Notes:

1. The IMC set identifier uniquely identifies the O&A coefficient set.

2. Response to the Start O&A Command is immediate. If the requested O&A set is available, it is put into effect at the start of the next frame. If unavailable, the SPS:

   a. Issues a request to OATS with a Message 3.
   b. Puts the O&A set into effect at the start of the next frame, after receiving the set from OATS.
   c. Reports the current O&A set in effect in a Message 10.

Message 110-7 – SPS Configuration Control – Start Imager NLUT Command

```
HEADER BLOCK FIELDS:
      MESSAGE SEQUENCE NO.          = 1-65535
      SATELLITE ID                  = 8,9,10,11,12,13,14,15 (I-P)
      SOURCE                        = 10 (GIMTACS)
                                    = 90-101 (GTACS)
      DESTINATION                   = 20,21,22,23,24,25,26,27,28 (SPS)
      NO. OF HALF-WORDS             = 8
      MESSAGE TYPE                  = 110
      MESSAGE SUBTYPE               = 7 (START IMAGER NLUT COMMAND): BEGIN
                                        USING SPECIFIED IMAGER NLUT AT START
                                        OF NEXT LINE
      TRACER                        = ASCII BLANKS
      MESSAGE COUNT                 = 1
      END OF MESSAGE                = 255
      ROUTING ID                    = N/A

DATA BLOCK LAYOUT:
   HALF-
   WORD NO. MSB                                          LSB
            0  1  2  3  4  5  6  7  8  9 10 11 12 13 14 15
           |-----------------------------------------------|
        1  |                     NLUT SET                  |
        .  |                    IDENTIFIER                 |
        4  |-----------------------------------------------|
        5  |                                               |
        .  |                      SPARE                    |
        8  |-----------------------------------------------|
```

DATA ITEM	FORMAT	VALIDATION	UNITS
NLUT SET IDENTIFIER	ASCII	8-CHAR ASCII FREE-FORM TEXT	N/A

Notes:

1. The NLUT set identifier uniquely identifies the NLUT set.

2. Response to the Start Configure command is immediate. If the requested NLUT set is available, it is put into effect at the start of the next line. If it is unavailable, the SPS:

   a. Issues a Message 5-1 to the PMs.
   b. Puts the NLUT set into effect, starting with the next line, after receiving the set from PM.
   c. Reports the current and latest NLUTs resident in a Message 10.

Message 110-8 – SPS Configuration Control – Start Sounder NLUT Command

```
HEADER BLOCK FIELDS:
      MESSAGE SEQUENCE NO.          = 1-65535
      SATELLITE ID                  = 8,9,10,11,12,13,14,15 (I-P)
      SOURCE                        = 10 (GIMTACS)
                                    = 90-101 (GTACS)
      DESTINATION                   = 20,21,22,23,24,25,26,27,28 (SPS)
      NO. OF HALF-WORDS             = 8
      MESSAGE TYPE                  = 110
      MESSAGE SUBTYPE               = 8 (START SOUNDER NLUT COMMAND):  BEGIN
                                        USING SPECIFIED SOUNDER NLUT AT START
                                        OF NEXT LINE
      TRACER                        = ASCII BLANKS
      MESSAGE COUNT                 = 1
      END OF MESSAGE                = 255
      ROUTING ID                    = N/A

DATA BLOCK LAYOUT:
     HALF-
     WORD NO. MSB                                          LSB
              0  1  2  3  4  5  6  7  8  9 10 11 12 13 14 15
             |-----------------------------------------------|
          1  |                     NLUT SET                  |
          .  |                    IDENTIFIER                 |
          4  |-----------------------------------------------|
          5  |                                               |
          .  |                      SPARE                    |
          8  |-----------------------------------------------|
```

DATA ITEM	FORMAT	VALIDATION	UNITS
NLUT SET IDENTIFIER	ASCII	8-CHAR ASCII FREE-FORM TEXT	N/A

Notes:

1. The NLUT set identifier uniquely identifies the NLUT set.

2. Response to the Start Configure Command is immediate. If the requested NLUT set is available, it is put into effect at the start of the next line. If it is unavailable, the SPS:

   a. Issues a Message 5-2 to the PMs.
   b. Puts the NLUT set into effect, starting with the next line, after receiving the set from PM.
   c. Reports the current and latest NLUTs resident in a Message 10.

Message 110-9 – SPS Configuration Control – Start Imager CORT Command

```
HEADER BLOCK FIELDS:
      MESSAGE SEQUENCE NO.          = 1-65535
      SATELLITE ID                  = 8,9,10,11,12,13,14,15 (I-P)
      SOURCE                        = 10 (GIMTACS)
                                    = 90-101 (GTACS)
      DESTINATION                   = 20,21,22,23,24,25,26,27,28 (SPS)
      NO. OF HALF-WORDS             = 8
      MESSAGE TYPE                  = 110
      MESSAGE SUBTYPE               = 9 (START IMAGER CORT COMMAND):  BEGIN
                                        USING SPECIFIED IMAGER CORT AT START
                                        OF NEXT FRAME
      TRACER                        = ASCII BLANKS
      MESSAGE COUNT                 = 1
      END OF MESSAGE                = 255
      ROUTING ID                    = N/A

DATA BLOCK LAYOUT:
 HALF-
 WORD NO. MSB                                          LSB
           0  1  2  3  4  5  6  7  8  9 10 11 12 13 14 15
          |-----------------------------------------------|
      1   |                     CORT SET                  |
      .   |                    IDENTIFIER                 |
      2   |-----------------------------------------------|
      3   |                                               |
      .   |                      SPARE                    |
      8   |-----------------------------------------------|
```

DATA ITEM	FORMAT	VALIDATION	UNITS
CORT SET IDENTIFIER	ASCII	4-CHAR ASCII	N/A

Notes:

1. The CORT set identifier uniquely identifies the CORT set.

2. Response to the start configure command is immediate. If the requested CORT set is available, it is put into effect at the start of the next frame. If it is unavailable, the SPS:

   a. Issues a Message 6 request to the PMs.
   b. Puts the CORT into effect, starting with the next frame, after receiving the set from PM.
   c. Reports the current and latest CORTs resident in a Message 10.

Message 111 – SPS Status Request

GIMTACS/GTACS uses Message 111 to request status from the SPS (see Message 10). The Message 111 data block layout and field definitions follow.

```
HEADER BLOCK FIELDS:
      MESSAGE SEQUENCE NO.          = 1-65535
      SATELLITE ID                  = 8,9,10,11,12,13,14,15 (I-P)
      SOURCE                        = 10 (GIMTACS)
                                    = 90-101 (GTACS)
      DESTINATION                   = 20,21,22,23,24,25,26,27,28,31 (SPS)
      NO. OF HALF-WORDS             = 0
      MESSAGE TYPE                  = 111
      MESSAGE SUBTYPE               = 0
      TRACER                        = ASCII BLANKS
      MESSAGE COUNT                 = 1
      END OF MESSAGE                = 255
      ROUTING ID                    = UNIQUE ID SUPPLIED BY
                                      GIMTACS/GTACS

DATA BLOCK LAYOUT:  N/A
```

Notes:

The SPS Message 10 response should occur within 2 seconds.

Message 112 – GIMTACS/GTACS Text Message

GIMTACS/GTACS uses Message 112 to send text messages to the SPS for inclusion in the GVAR auxiliary block. Text messages can contain up to 11,850 ASCII characters (5925 data words). If a text message is sent that exceeds the X.25 message length limitation of 3584 bytes, the message count and end of message fields of the header portion of the data field (see Figure 4-8) are used to sequence the resulting multiple X.25 messages for transmission. The Message 112 data block layout and field definitions follow.

```
HEADER BLOCK FIELDS:
      MESSAGE SEQUENCE NO.          = 1-65535
      SATELLITE ID                  = 8,9,10,11,12,13,14,15 (I-P)
      SOURCE                        = 10 (GIMTACS)
                                    = 90-101 (GTACS)
      DESTINATION                   = 20,21,22,23,24,25,26,27,28,31 (SPS)
      NO. OF HALF-WORDS             = 2 TO 1776
      MESSAGE TYPE                  = 112
      MESSAGE SUBTYPE               = 0
      TRACER                        = ASCII BLANKS
      MESSAGE COUNT                 = SEE NOTE 2
      END OF MESSAGE                = SEE NOTE 2
      ROUTING ID                    = N/A

DATA BLOCK LAYOUT:
   HALF-
   WORD NO.  MSB                                                LSB
              0  1  2  3  4  5  6  7  8  9  10  1  12  13  14  15
            |-------------------------------------------------|
        1   |                                                 |
        .   |                 TEXT MESSAGE                    |
      1776  |-------------------------------------------------|
```

DATA ITEM	FORMAT	VALIDATION	UNITS
TEXT MESSAGE	ASCII	N/A	N/A

Notes:

1. Message count and end of message indicators in the header data field (see Figure 4-8) allow the SPS to identify the first and last X.25 messages in a sequence in the event the text message exceeds 1776 half-words, the maximum X.25 data message size. If the text message contains an odd number of characters, a blank character must be added to ensure the message ends on a half-word boundary.

2. The message count and end of message values are dependent on message size.

Message 113 – AVS/ADS Telemetry Rate Control (GOES N-P)

GTACS can control the rate at which it receives AVS or ADS telemetry data (Message 13) from the MRS&S. Message 113 is used for this purpose.

```
HEADER BLOCK FIELDS:
      MESSAGE SEQUENCE #            = 1-65535
      SATELLITE ID                  = 13, 14, 15, 16 (N-P)
      SOURCE                        = 90 - 101 (GTACS)
      DESTINATION                   = 51 - 70 (MRS&S)
      # OF DATA HALF-WORDS          = 2
      DATA TYPE                     = 113
      DATA SUBTYPE                  = 1 (AVS TELEMETRY)
                                    = 3 (ADS TELEMETRY)
      TRACER                        = ASCII BLANKS
      MESSAGE COUNT                 = 1
      END OF MESSAGE                = 255
      ROUTING ID                    = N/A
```

DATA BLOCK LAYOUT:

HALF-WORD NO.	MSB 0	1	2	3	4	5	6	7	8	9	10	11	12	13	14	LSB 15
1	AVS/ADS TELEMETRY MESSAGE INTERVAL															
2	SPARES															

DATA ITEM	FORMAT	VALIDATION	UNITS
AVS/ADS RATE	I*2	0 - 10	SECS
SPARE	I*2	0	N/A

Notes:

1. AVS/ADS Telemetry Message Interval indicates the desired time between AVS or ADS Telemetry Messages (Type 13) from the MRS&S.
2. Message 13 is primarily a diagnostic message used in the spacecraft integration and test environment.

Message 114-1 – MRS&S Status Request (GOES N-P)

MRS&S Status (Message 14) is requested by GTACS at any time, by issuing a Message 114. The following is the Message 114, Subtype 1 block layout.

```
HEADER BLOCK FIELDS:
      MESSAGE SEQUENCE #            = 1-65535
      SATELLITE ID                  = 13,14,15 (N-P)
      SOURCE                        = 90 - 101 (GTACS)
      DESTINATION                   = 51 - 70 (MRS&S)
      # OF DATA HALF-WORDS          = 0
      DATA TYPE                     = 114
      DATA SUBTYPE                  = 1 (MRS&S STATUS)
      TRACER                        = ASCII BLANKS
      MESSAGE COUNT                 = 1
      END OF MESSAGE                = 255
      ROUTING ID                    = N/A

DATA BLOCK LAYOUT: N/A
```

Message 115 – MDL Telemetry Message Rate Control

MDL telemetry message rate control messages (Type 115) correspond to the MDL telemetry subtypes identified in Message 15. GTACS receives the MDL telemetry subtype data from the MRS&S at the rate GTACS identifies in the Message 115. The following page contains a description of Message 115's block layout and field definitions.

```
HEADER BLOCK FIELDS:
      MESSAGE SEQUENCE NO.          = 1-65535
      SATELLITE ID                  = 13,14,15 (N-P)
      SOURCE                        = 90 - 101 (GTACS)
      DESTINATION                   = 51 - 70 (MRS&S)
      NO. OF HALF-WORDS             = 2
      DATA TYPE                     = 115
      DATA SUBTYPE                  APID (hex):
                                    = 10 - SXI HOUSEKEEPING (non-critical)
                                    = 13 - SXI IMAGE SUMMARY (non-critical)
                                    = 20 - SXI OBSERVING EVENTS (non-critical)
                                    = 21 - SXI COMPUTER EVENTS (critical)
                                    = 31 - SXI MEMORY DUMP (non-critical)
                                    = FE - PCM1 TELEMETRY (non-critical)
                                    = FF - PCM2 TELEMETRY (non-critical)
      TRACER                        = ASCII BLANKS
      MESSAGE COUNT                 = 1
      END OF MESSAGE                = 255
      ROUTING ID                    = N/A

DATA BLOCK LAYOUT:
       HALF-    MSB                                                  LSB
       WORD NO.  0  1  2  3  4  5  6  7  8  9 10 11 12 13 14 15
          1     MDL TELEMETRY MESSAGE TRANSMISSION INTERVAL
          2     SPARE
```

DATA ITEM	FORMAT	VALIDATION	UNITS
MDL MESSAGE INTERVAL	I*2	0-10	SECONDS
SPARE	I*2	0	N/A

Notes:

For SXI Housekeeping data, the range of values for MDL message interval is 0 – 10. For all other subtypes, the range of values for MDL message interval is 0 – 1. A transmission rate of 1 requests data at the maximum rate at which MRS&S can serve the data after receiving the specified data from the spacecraft. A transmission rate of 0 shuts off the flow of non-critical data; flow of critical data is not stopped, regardless of the message interval.

Message 123 – PM Status Request

GIMTACS/GTACS requests the PM server status asynchronously via this message. The PM sends the status message within 2 seconds of receiving this message. The message data block layout and filed definitions are as follows:

```
HEADER BLOCK FIELDS:
      MESSAGE SEQUENCE NO.          = 1-65535
      SATELLITE ID                  = 8,9,10,11,12,13,14,15 (I-P)
      SOURCE                        = 10 (GIMTACS, GTACS)
      DESTINATION                   = 11,12,13,14,15,16,17,18,19,29 (PM) or 33
                                    (All PM)
      NO. OF HALF-WORDS             = 0
      MESSAGE TYPE                  = 123
      MESSAGE SUBTYPE               = 0
      TRACER                        = ASCII BLANKS
      MESSAGE COUNT                 = 1
      END OF MESSAGE                = 255
      ROUTING ID                    = UNIQUE ID SUPPLIED BY GIMTACS/GTACS

DATA BLOCK LAYOUT:  N/A
```

Message 129 – GTACS-RPM Text Message (GOES N-P)

GTACS uses Message 129 to send text messages to the RPM concerning operations, configuration, and status. Text messages can contain up to 65 ASCII characters. The Message 129 data block layout and field definitions are as follows:

```
HEADER BLOCK FIELDS:
      MESSAGE SEQUENCE NO.          = 1-65535
      SATELLITE ID                  = 13,14,15 (N-P) SOURCE
      SOURCE                        = 90 - 101 (GTACS)
      DESTINATION                   = 11 - 19, 29 (RPM)
      NO. OF HALF-WORDS             = 40
      MESSAGE TYPE                  = 129
      MESSAGE SUBTYPE               = 0
      TRACER                        = ASCII BLANKS
      MESSAGE COUNT                 = 1
      END OF MESSAGE                = TRUE
      ROUTING ID                    = N/A

DATA BLOCK LAYOUT:
       HALF-     MSB                                                LSB
       WORD NO.  0   1   2   3   4   5   6   7   8   9  10  11  12  13  14  15
           1
           :                          TEXT MESSAGE
          40
```

DATA ITEM	FORMAT	VALIDATION	UNITS
TEXT MESSAGE	ASCII	N/A	N/A

Notes:

Eight-bit ASCII character pairs are formatted into half-words by placing the first character in the most significant byte (bits 0–7) and the second character in the least significant byte (bits 8–15).

Message 151 – Star View Command Parameter Request (1 of 2)

During its normal scheduling activity, GIMTACS/GTACS sends OATS a Message 151 to obtain star command data for the daily schedule. GIMTACS/GTACS may also send this message for standby or other schedules being generated. GIMTACS/GTACS sends a Message 151 in response to Message 71 from OATS. OATS sends this request whenever it determines that the attitude uncertainty mode has changed. The Message 151 data block layout and field definitions follow.

```
HEADER BLOCK FIELDS:
      MESSAGE SEQUENCE NO.          = 1-65535
      SATELLITE ID                  = 8,9,10,11,12,13,14,15 (I-P)
      SOURCE                        = 10 (GIMTACS)
                                    = 90-101 (GTACS)
      DESTINATION                   = 41,42,43,44,45,46,47,48,49,50 (I-M OATS)
                                    = 75-85 (N-P OATS)
      NO. OF HALF-WORDS             = (SEE NOTES)
      MESSAGE TYPE                  = 151
      MESSAGE SUBTYPE               = 1 - IMAGER
                                    = 2 - SOUNDER
      TRACER                        = BLANKS
      MESSAGE COUNT                 = 1
      END OF MESSAGE                = TRUE
      ROUTING ID                    = UNIQUE ID SUPPLIED BY GIMTACS/GTACS

DATA BLOCK LAYOUT:
   HALF-
   WORD NO. MSB                                          LSB
             0  1  2  3  4  5  6  7  8  9 10 11 12 13 14 15
           |-----------------------------------------------|
        1  |                IMC SET IDENTIFIER             |
        2  |                                               |
           |-----------------------------------------------|
        3  |          NO. OF WINDOWS IN MESSAGE (N)        |
           |-----------------------------------------------|
        4  |                                               |
        5  |                     SPARES                    |
        6  |                                               |
           |-----------------------------------------------|
        7  |                WINDOW SEQUENCE NO.            |
        8  |                                               |
           |-----------------------------------------------|—
        9  |                      YEAR                     | |
           |-----------------------------------------------| |
       10  |  |         DAY OF YEAR            |  HR (10s) | |  WINDOW
           |-----------------------------------------------| |  START
       11  |  HR (1s)  |        MINUTES         |  SEC (10s) |  TIME
           |-----------------------------------------------| |
       12  |  SEC (1s) |               MSECS                | |
           |-----------------------------------------------|—
       13  |                WINDOW DURATION                |
       14  |                                               |
           |-----------------------------------------------|
       15  | ADDITIONAL WINDOW SEQUENCE No.s, START TIMES, |
        :  |                AND DURATIONS                  |
     8N+6  |-----------------------------------------------|
```

Message 151 – Star View Command Parameter Request (2 of 2)

DATA ITEM	FORMAT	VALIDATION	UNITS
IMC SET IDENTIFIER	ASCII	ANNN	N/A
NO. OF WINDOWS IN MESSAGE	I*2	1-200	N/A
WINDOW SEQUENCE NO.	I*4	1-65535	N/A
WINDOW START TIME YEAR	BCD	1989-2025	YEAR
DAY OF YEAR	BCD	1-366	DAY
HOUR	BCD	0-23	HOURS
MINUTES	BCD	0-59	MIN
SECONDS	BCD	0-59	SEC
MSEC	BCD	0-999	MSEC
WINDOW DURATION	R*4	0.2-1440.	MIN

Notes:

1. Half-words 7 through 14 repeat for each window in the message. The message length is given by $8N + 6$, with a maximum length of 1606, 16-bit half-words when $N = 200$.

2. Window sequence numbers are arbitrary and repeated in the response message.

3. The IMC identifier is required because GIMTACS/GTACS and OATS deal with more than one IMC set. The star commands must be consistent with the parent IMC set to be in effect on the spacecraft at the time the commands are invoked. This ensures a correct application of the short span attitude adjustment. Thus, GIMTACS/GTACS may request one star command set to support current operations and another star command set for scheduling future operations. Star commands in the OATS Message 71 are based strictly on the parent IMC set as OATS cues on the group identifier portion of the IMC set identifier only. In the case of current operations support, GIMTACS/GTACS can send either the parent identifier or the currently enabled set identifier—whichever is most convenient—and be assured of getting the appropriate star data, based on the current parent set.

Message 153 – IMC, SMC, or SCC Coefficient Request

OATS uses Messages 62 and 63 to notify GIMTACS/GTACS that OATS has computed a new IMC, SMC, or SCC coefficient set. GIMTACS/GTACS sends OATS a Message 153 to request the set. The Message 153 data block layout and field definitions follow.

```
HEADER BLOCK FIELDS:
      MESSAGE SEQUENCE NO.          = 1-65535
      SATELLITE ID                  = 8,9,10,11,12,13,14,15 (I-P)
      SOURCE                        = 10 (GIMTACS)
                                    = 90-101 (GTACS)
      DESTINATION                   = 41,42,43,44,45,46,47,48,49,50 (I-M OATS)
                                    = 75-85 (N-P OATS)
      NO. OF HALF-WORDS             = 8
      MESSAGE TYPE                  = 153
      MESSAGE SUBTYPE               = 1 - NORMAL REQUEST
                                    = 2 - PREVIOUSLY ENABLED SET
                                    = 101 - SMC SET (GOES I-M)
                                    = 102 - SCC SET (GOES I-M)
      TRACER                        = BLANKS
      MESSAGE COUNT                 = 1
      END OF MESSAGE                = TRUE
      ROUTING ID                    = UNIQUE ID SUPPLIED BY GIMTACS/GTACS

DATA BLOCK LAYOUT:
   HALF-
   WORD NO. MSB                                          LSB
             0  1  2  3  4  5  6  7  8  9 10 11 12 13 14 15
           |-----------------------------------------------|
         1 |           IMC/SMC/SCC SET IDENTIFIER          |
         2 |                                               |
           |-----------------------------------------------|
         3 |                    SPARE                      |
         8 |                                               |
           |-----------------------------------------------|
```

DATA ITEM	FORMAT	VALIDATION	UNITS
IMC/SMC/SCC SET IDENTIFICATION	ASCII	ANNN FOR IMC	N/A
		NNNA FOR SMC	N/A
		NNNC FOR SCC	N/A

Notes:

The IMC, SMC, or SCC set identifier must be provided. GIMTACS/GTACS requests a specific set by its ID, which has been previously furnished by OATS in a Message 62 or 63. See Section 4.3.2.2.1 for a description of the IMC set identifier.

Message 154 – OATS Health and Status Request (1 of 3)

GIMTACS/GTACS sends Message 154 to OATS to advise OATS of the current RPM and SPS status. Additionally, Messages 154 is used to request health and status advisories from OATS. The Message 154 data block layout and field definitions follow.

```
HEADER BLOCK FIELDS:
      MESSAGE SEQUENCE NO.          = 1-65535
      SATELLITE ID                  = 8,9,10,11,12,13,14,15 (I-P)
      SOURCE                        = 10 (GIMTACS)
                                    = 90-101 (GTACS)
      DESTINATION                   = 41,42,43,44,45,46,47,48,49,50 (I-M OATS)
                                    = 75-85 (N-P OATS)
      NO. OF HALF-WORDS             = UP TO 148
      MESSAGE TYPE                  = 154
      MESSAGE SUBTYPE               = 1 - RESPONSE REQUESTED
                                      2 - RESPONSE MESSAGE
      TRACER                        = BLANKS
      MESSAGE COUNT                 = 1
      END OF MESSAGE                = TRUE
      ROUTING ID                    = UNIQUE ID SUPPLIED BY GIMTACS/GTACS

DATA BLOCK LAYOUT:
   HALF-
   WORD NO. MSB                                                  LSB
            0  1  2  3  4  5  6  7  8  9  10  11  12  13  14  15
          |-----------------------------------------------------|_
        1 |                      YEAR                           | | TIME
          |-----------------------------------------------------| | STAMP
        2 |  |         DAY OF YEAR            |  HR (10s)       | | FOR
          |-----------------------------------------------------| | THIS
        3 |  HR (1s)  |        MINUTES         |  SEC (10s)      | | MESSAGE
          |-----------------------------------------------------| |
        4 |  SEC (1s) |               MSECS                     | |
          |-----------------------------------------------------|_
        5 |                    NO. (N) OF SPSs                  |
        6 |
          |-----------------------------------------------------|
        7 |                     NO. (K) OF PMs                  |
        8 |
          |-----------------------------------------------------|
        9 |                      SPS1 STATUS                    |
       10 |
          |-----------------------------------------------------|
       11 |                     SPS1 SATELLITE                  |
       12 |
          |-----------------------------------------------------|
       13 |                   SPS1 COMM CON ID/SERVER ID        |
       14 |
          |-----------------------------------------------------|
       15 |
       16 |                 SPS1 COMM CON NAME/SERVER NAME      |
       17 |
       18 |
          |-----------------------------------------------------|
       19 |                       STATUS                        |
        . |                 SATELLITE SUPPORTED                 |
        . |                     COMM CON ID/SERVER ID           |
        . |                    COMM CON NAME/SERVER NAME        |
        . |                        FOR                          |
        . |                   SPSN (2 <= N <= 5)                |
   10N+ 8 |           (10 HALF-WORDS EACH, AS FOR SPS1)         |
          |-----------------------------------------------------|
   10N+ 9 |                      PM1 STATUS                     |
   10N+10 |
          |-----------------------------------------------------|
   10N+11 |                     PM1 SATELLITE                   |
   10N+12 |
          |-----------------------------------------------------|
```

Message 154 – OATS Health and Status Request (2 of 3)

```
HALF-
WORD NO. MSB                                                    LSB
         0  1  2  3  4  5  6  7  8  9  10  11  12  13  14  15
        |-----------------------------------------------------|—
10N+13  |                  PM1 COMM CON ID/SERVER ID          |
10N+14  |                                                     |
        |-----------------------------------------------------|
10N+15  |                 PM1 COMM CON NAME/SERVER NAME       |
10N+16  |                                                     |
10N+17  |                                                     |
10N+18  |                                                     |
        |-----------------------------------------------------|
10N+19  |                       STATUS                        |
     .  |                SATELLITE SUPPORTED                  |
     .  |                    COMM CON ID/SERVER ID            |
     .  |                   COMM CON NAME/SERVER NAME         |
     .  |                         FOR                         |
     .  |                   PMK (2 <= K <= 9)                 |
10(N+K)+8 |          (10 HALF-WORDS EACH, AS FOR PM1)         |
        |-----------------------------------------------------|
```

DATA ITEM	FORMAT	VALIDATION	UNITS
FRAME START TIME YEAR	BCD	1989-2025	YEAR
DAY OF YEAR	BCD	1-366	DAY
HOUR	BCD	0-23	HOURS
MINUTES	BCD	0-59	MINUTES
SECONDS	BCD	0-59	SECONDS
MSEC	BCD	0-999	MSEC
NO. (N) OF SPSs	I*4	0-5	N/A
NO. (K) OF PMs	I*4	0-9	N/A
STATUS	I*4	0 - ACTIVE	N/A
		1 - STATIC	N/A
		2 – UNKNOWN (N-P)	N/A
SATELLITE ID	I*4	8-12 (I-M)	N/A
	I*4	13-16 (N-P)	N/A
COMM CON ID/SERVER ID	I*4	(SEE NOTES)	N/A
COMM CON NAME/SRVR NAME	C*8	(SEE NOTES)	N/A

Notes:

1. The satellite ID in the header is not relevant in this message. However, GIMTACS/GTACS uses the satellite ID for the first active satellite (in the order 8, 9, 10, 11, 12)/(13, 14, 15). In the case of no active satellite, it uses satellite ID 8 for I-M and satellite ID 13 for N-P.

2. The time stamp is the time that the response was generated.

3. The following are OATS node numbers:

41 = SOAT01	42 = SOAT02	GOES I-M
43 = SOAT03	44 = SOAT04	
45 = SOAT05	46 = SOAT06	
47 = COAT01	48 = COAT02	
49 = GOAT01	50 = GOAT02	
75 = SOAT11	76 = SOAT12	GOES N-P
77 = SOAT13	78 = SOAT14	
79 = SOAT15	80 = SOAT16	
81 = SOAT17	82 = COAT11	
83 = COAT12	84 = COAT13	
85 = GOAT11		

Message 154 – OATS Health and Status Request (3 of 3)

4. The following are OATS status levels:
   0: ACTIVE - Equipment is currently up and communicating with GIMTACS/GTACS. For GTACS, it is communicating with the server that is primary for the satellite connected to this equipment.

   1: STATIC - Equipment is no longer communicating with GIMTACS/GTACS. Satellite information is possibly incorrect. This status is only reported in the first response message following disconnection from the equipment.

   2: UNKNOWN - (GOES N-P) This equipment is either not connected to the GTACS server, or the GTACS server is not primary for the satellite connected with this equipment.

5. The following are satellite IDs:
   8-16: The number of the satellite connected to this equipment. If the equipment STATUS is STATIC, this information is possibly incorrect.

6. (GOES I-M) The CC ID is the Router Table number of the CC actually connected to this equipment and is used by OATS in the Router Header to send any messages destined for this equipment. If no connection to this hardware is ACTIVE, the value is -1.

7. (GOES I-M) The CC name is the name of the CC actually connected to this equipment. The first character of the name is “S” for SOCC or “C” for CDA. The fourth and fifth characters of the name are the numeric designation of the CC. If no connection to this hardware is ACTIVE, the value is blank.

8. Server ID:
   (GOES N-P) This identifier contains the server connection number (1 or 2) being used. If the server connection is inactive, the entry is –1.

9. Server Name:
   (GOES N-P) This contains the name of the GTACS acting as server. When no connection is active the name is blank.

Message 155 – Scan Frame Request (1 of 3)

GIMTACS/GTACS uses Message 155-1 and 155-2 to request scan frame definition coordinate conversions from either longitude and latitude or scan line, pixel number cycle, and increment coordinates for the Imager and Sounder, respectively. For Super Rapid Scan Operations (SRSO), the Imager and Sounder scan frames can also be defined by a center point (in latitude and longitude, frame duration, and aspect ratio). The Message 155 data block layout and field definitions follow.

```
HEADER BLOCK FIELDS:
      MESSAGE SEQUENCE NO.          = 1-65535
      SATELLITE ID                  = 8,9,10,11,12,13,14,15 (I-P)
      SOURCE                        = 10 (GIMTACS)
                                    = 90-101 (GTACS)
      DESTINATION                   = 41,42,43,44,45,46,47,48,49,50 (I-M OATS)
                                    = 75-85(N-P OATS)
      NO. OF HALF-WORDS             = UP TO 968 (SEE NOTES)
      MESSAGE TYPE                  = 155
      MESSAGE SUBTYPE               = 1 - IMAGER
                                    = 2 - SOUNDER
      TRACER                        = BLANKS
      MESSAGE COUNT                 = 1
      END OF MESSAGE                = TRUE
      ROUTING ID                    = UNIQUE ID SUPPLIED BY GIMTACS/GTACS

DATA BLOCK LAYOUT:
    HALF-
    WORD NO. MSB                                          LSB
              0  1  2  3  4  5  6  7  8  9 10 11 12 13 14 15
            |-----------------------------------------------|
         1  |               IMC SET IDENTIFIER              |
         2  |
            |-----------------------------------------------|
         3  |    NUMBER OF SCAN FRAMES IN REQUEST (J)       |
         4  |
            |-----------------------------------------------|
         5  |                     SPARE                     |
         6  |
            |-----------------------------------------------|
         7  |                   IMC STATUS                  |
         8  |
            |-----------------------------------------------|
         9  |                     YEAR                      |
            |-----------------------------------------------|
        10  |  |         DAY OF YEAR            | HR (10s)  |
            |-----------------------------------------------|
        11  | HR (1s)   |        MINUTES         | SEC (10s) |
            |-----------------------------------------------|
        12  | SEC (1s)  |              MSECS                |
            |-----------------------------------------------|
        13  |                COORDINATE TYPE                |
        14  |
            |-----------------------------------------------|
        15  |          SPACELOOK SIDE SELECTION             |
        16  |
            |-----------------------------------------------|
        17  |                SPACELOOK MODE                 |
        18  |
            |-----------------------------------------------|
        19  |              DEFAULT FRAME FLAG               |
        20  |
            |-----------------------------------------------|
        21  |             SOUNDER STEPPING MODE             |
        22  |
            |-----------------------------------------------|
        23  |       VIS SCAN START LINE NO. OR LATITUDE     |
        24  |          OR SRSO CENTER POINT LATITUDE        |
            |-----------------------------------------------|
```

Message 155 – Scan Frame Request (2 of 3)

```
HALF-
WORD NO. MSB                                          LSB
         0  1  2  3  4  5  6  7  8  9 10 11 12 13 14 15
        |-----------------------------------------------|
     25 |      VIS SCAN START PIXEL NO. OR LONGITUDE    |
     26 |          OR SRSO CENTER POINT LATITUDE        |
        |-----------------------------------------------|
     27 |       VIS SCAN STOP LINE NO. OR LATITUDE      |
     28 |             OR SRSO ASPECT RATIO              |
        |-----------------------------------------------|
     29 |      VIS SCAN STOP PIXEL NO. OR LONGITUDE     |
     30 |            OR SRSO FRAME DURATION             |
        |-----------------------------------------------|
     31 |                     SPARE/REPEAT COUNT        |
     32 |                                               |
        |-----------------------------------------------|
     33 |  ADDITIONAL SCAN FRAMES REPEATS WORDS 9 TO    |
 24*J+8 |        32 FOR J-1 SCANS.  SEE NOTES           |
        |-----------------------------------------------|
```

DATA ITEM	FORMAT	VALIDATION	UNITS
IMC SET IDENTIFIER	ASCII	ANNN	N/A
NO. OF SCAN FRAMES IN MSG	I*4	1-40	N/A
IMC STATUS	I*4	0 - ENABLED 1 - DISABLED	N/A
SCAN START TIME YEAR	BCD	1989-2025	YEAR
DAY OF YEAR	BCD	1-366 DAY	
HOUR	BCD	0-23 HOURS	
MINUTES	BCD	0-59 MINUTES	
SECONDS	BCD	0-59 SECONDS	
MSEC	BCD	0-999 MSEC	
COORDINATE TYPE	I*4	1 - LAT/LONG 2 - SCAN LINE/PIXEL 3 - SRSO	N/A
SPACELOOK SIDE SELECTION	I*4	0 - OATS SELECTED 1 - EAST SIDE 2 - WEST SIDE	N/A
SPACELOOK MODE	I*4	0 - N/A SOUNDER 1 - FAST SPACE (9.2 SEC INTERVAL) CLAMP 2 - SLOW SPACE (36.6 SEC INTERVAL) CLAMP 3 - SCAN CLAMP	N/A
DEFAULT FRAME FLAG	I*4	0 - USED DATA PROVIDED 1 - USE DEFAULT 1 2 - USE DEFAULT 2 3 - USE DEFAULT 3	N/A
SOUNDER STEPPING MODE	I*4	-1 - N/A IMAGER 0 - NORMAL STEP MODE 1 - 0.2 SEC DWELL 2 - 0.4 SEC DWELL 3 - SKIP MODE	N/A

Message 155 – Scan Frame Request (3 of 3)

DATA ITEM	FORMAT	VALIDATION	UNITS
VIS SCAN START LINE NO. OR	R*4	1-15787 (IMAGER)	LINES
		1-1582 (SOUNDER)	LINES
LATITUDE		-90 TO +90	DEG
SRSO CNTR POINT LATITUDE	R*4	-90 TO +90	DEG
VIS SCAN START PIXEL NO. OR	R*4	0-30680 (IMAGER)	PIXELS
		0-1758 (SOUNDER)	PIXELS
LONGITUDE		0-360	° WEST
SRSO CNTR POINT LONGITUDE	R*4	0-360	° WEST
VIS SCAN STOP LINE NO. OR	R*4	1-15787 (IMAGER)	LINES
		1-1582 (SOUNDER)	LINES
LATITUDE		-90 TO +90	DEG
SRSO ASPECT RATIO	R*4	0.1-10	N/A
VIS SCAN STOP PIXEL NO. OR	R*4	0-30680 (IMAGER)	PIXELS
		0-1758 (SOUNDER)	PIXELS
LONGITUDE		0-360	° WEST
SRSO FRAME DURATION	R*4	0.5-60.0	MIN
REPEAT COUNT	I*4	0-64 (IMAGER)(N-P)	N/A
	I*4	0-16 (SOUNDER)(N-P)	N/A

Notes:

1. Sounder stepping mode is ignored for the subtype Imager.
2. The IMC set identifier denotes the set in effect at the time specified in the request. See Section 4.3.2.2.1 for a description of the IMC set identifier.
3. IMC status denotes the status in effect at the time specified in the request.
4. Latitude and longitude are true geographic coordinates.
5. For SRSO, the scan frame is defined by a center point, a frame duration, and an aspect ratio. OATS determines the necessary start and stop points for the requested frame. The aspect ratio is the ratio of width(pixels) to height(lines). An aspect ratio of 1.0 generates a square frame. For example, an aspect ratio of 2.0 generates a frame twice as wide as it is high (i.e., with twice as many pixels as lines); and an aspect ratio of 0.5 generates a frame twice as high as it is wide (i.e., with twice as many lines as pixels). The actual aspect ratio may be slightly different due to overscan and swath considerations.
6. The maximum number of scan frames to convert in this message is 40, driven by the Message 55 size limitation.
7. (GOES N-P) The repeat count for the Sounder is the number of 4 scan repeats. Thus a Sounder repeat count of 16 represents a total of 64 additional scans.

Message 159 – Eclipse Predictions Request

GIMTACS/GTACS requests predictions of eclipses over a specified time span from OATS. These predictions include shadowing of the satellite by both the Earth and the Moon, with indications of entrance and exit from umbra and penumbra. The Message 159 data block layout and field definitions follow.

```
HEADER BLOCK FIELDS:
      MESSAGE SEQUENCE NO.          = 1-65535
      SATELLITE ID                  = 8,9,10,11,12,13,14,15 (I-P)
      SOURCE                        = 10 (GIMTACS)
                                    = 90-101 (GTACS)
      DESTINATION                   = 41,42,43,44,45,46,47,48,49,50 (I-M OATS)
                                    = 75-85 (N-P OATS)
      NO. OF HALF-WORDS             = 6
      MESSAGE TYPE                  = 159
      MESSAGE SUBTYPE               = 0
      TRACER                        = BLANKS
      MESSAGE COUNT                 = 1
      END OF MESSAGE                = TRUE
      ROUTING ID                    = UNIQUE ID SUPPLIED BY GIMTACS/GTACS
```

```
DATA BLOCK LAYOUT:
       HALF-
       WORD NO. MSB                                          LSB
                 0  1  2  3  4  5  6  7  8  9 10 11 12 13 14 15
              |-----------------------------------------------|
            1 |                      YEAR                     |
              |-----------------------------------------------|
            2 |  |         DAY OF YEAR            |  HR (10s)  |  SPAN
              |-----------------------------------------------|  START
            3 |  HR (1s)  |        MINUTES         |  SEC (10s) |  TIME
              |-----------------------------------------------|
            4 |  SEC (1s) |               MSECS                |
              |-----------------------------------------------|
            5 |                    DURATION                   |
            6 |
              |-----------------------------------------------|
```

DATA ITEM	FORMAT	VALIDATION	UNITS
SPAN START TIME YEAR	BCD	1989-2025	YEAR
DAY OF YEAR	BCD	1-366	DAY
HOUR	BCD	0-23	HOURS
MINUTES	BCD	0-59	MIN
SECONDS	BCD	0-59	SEC
MSEC	BCD	0-999	MSEC
DURATION	R*4	1-14400	MIN

Notes:

Start time and duration define the time span over which eclipse predictions are requested.

Message 160 – Sensor Intrusion Request

For GOES I-M, GIMTACS requests from OATS predictions of intrusions of the Sun and Moon into the Earth sensor FOV, into the East and West edges of the Imager and Sounder FOV, and the Sun into the CDA ground antenna's FOV (using subtype 0). For GOES N-P, GTACS requests from OATS predictions of intrusions of the Sun and Moon into the East and West edges of the Imager and Sounder FOV and of the Sun into the CDA ground antenna's FOV using Subtype 1, and the Sun into a set of predefined frames using Subtype 2. The Message 160 data block layout and field definitions follow.

```
HEADER BLOCK FIELDS:
      MESSAGE SEQUENCE NO.          = 1-65535
      SATELLITE ID                  = 8,9,10,11,12,13,14,15 (I-P)
      SOURCE                        = 10 (GIMTACS)
                                    = 90-101 (GTACS)
      DESTINATION                   = 41,42,43,44,45,46,47,48,49,50 (I-M OATS)
                                    = 75-85 (N-P OATS)
      NO. OF HALF-WORDS             = 6
      MESSAGE TYPE                  = 160
      MESSAGE SUBTYPE               = 0 (GOES I-M)
                                    = 1 (GOES N-P)
                                    = 2 (GOES N-P)
      TRACER                        = BLANKS
      MESSAGE COUNT                 = 1
      END OF MESSAGE                = TRUE
      ROUTING ID                    = UNIQUE ID SUPPLIED BY GIMTACS/GTACS

DATA BLOCK LAYOUT:
 HALF-
 WORD NO. MSB                                          LSB
           0  1  2  3  4  5  6  7  8  9 10 11 12 13 14 15
         |-----------------------------------------------|-
      1  |                     YEAR                      | |
         |-----------------------------------------------| |
      2  |  |         DAY OF YEAR            |  HR (10s) | | SPAN
         |-----------------------------------------------| | START
      3  |  HR (1s)  |        MINUTES         |  SEC (10s)| | TIME
         |-----------------------------------------------| |
      4  |  SEC (1s) |               MSECS               | |
         |-----------------------------------------------|-
      5  |                   DURATION                    |
      6  |                                               |
         |-----------------------------------------------|
```

DATA ITEM	FORMAT	VALIDATION	UNITS
SPAN START TIME YEAR	BCD	1989-2025	YEAR
DAY OF YEAR	BCD	1-366	DAY
HOUR	BCD	0-23	HOURS
MINUTES	BCD	0-59	MIN
SECONDS	BCD	0-59	SEC
MSEC	BCD	0-999	MSEC
DURATION	R*4	1-14400	MIN

Notes:

1. Start time and duration define the time span over which sensor intrusion predictions are requested.
2. For sensor intrusions, duration is limited to 10 days, 14,440 minutes. For frame instructions, duration is limited to 90 days, 129,600 minutes.

Message 162 – IMC Set Request (GOES N-P) (1 of 2)

GTACS sends OATS one of the Message 162 subtypes when it is ready to upload a major IMC set change. The Message 162 data block layout and field definitions are as follows:

```
HEADER BLOCK FIELDS:
      MESSAGE SEQUENCE NO.          = 1-65535
      SATELLITE ID                  = 13,14,15 (N-P)
      SOURCE                        = 90 - 101 (GTACS)
      DESTINATION                   = 75 - 85 (Primary OATS)
      NO. OF HALF-WORDS             = 6
      MESSAGE TYPE                  = 162
      MESSAGE SUBTYPE               = 1 - NORMAL SET
                                    = 2 - POST HOUSEKEEPING SET
                                    = 3 - ECLIPSE SET
                                    = 4 - POST MANEUVER SET
                                    = 5 - POST YAW FLIP SET
                                    = 6 - POST THRUSTER FLUSHING SET
                                    = 7 - POST ECLIPSE
      TRACER                        = ASCII BLANKS
      MESSAGE COUNT                 = 1
      END OF MESSAGE                = TRUE
      ROUTING ID                    = N/A
```

DATA BLOCK LAYOUT:

HALF-WORD NO. (MSB 0 … LSB 15)																
1	YEAR															
2		DAY OF YEAR											HR(10s)			
3	HR(1s)				MINUTES								SEC(10s)			
4	SEC(1s)				MSECS											
5	MANEUVER WINDOW DURATION (SECONDS)															
6																

DATA ITEM	FORMAT	VALIDATION	UNITS
TIME OF YEAR	BCD	1989-2025	YEAR
DAY OF YEAR	BCD	1-366	DAY
HOUR	BCD	0-23	HOURS
MINUTES	BCD	0-59	MIN
SECONDS	BCD	0-59	SEC
MILLISECONDS	BCD	0-999	MSEC
MANEUVER WINDOW DURATION	R*4	0.0-6000.	SEC

Message 162 – IMC Set Request (GOES N-P) (2 of 2)

Notes:

1. This message is used by GTACS to notify OATS that it is ready to receive the specified type of IMC set.
2. Subtypes 4 or 6 will initiate generation of maneuver commands and calculation of a post-maneuver IMC set for stationkeeping, drift, or thruster flushing maneuvers. OATS must have previously commanded these maneuvers. OATS will only generate maneuver commands and calculate a post-maneuver IMC set if a commanded maneuver lies within the time window specified in the message. OATS will automatically send messages 33 and 62 when the calculation is completed.
3. Subtype 2 will initiate planning of a momentum-dumping maneuver and the post-maneuver IMC set. OATS will automatically send messages 33, 57, and 62 when the momentum-dumping maneuver planning is completed.
4. Subtype 3 will initiate calculation of an eclipse IMC set. OATS will automatically send messages 33 and 62 when the calculation is completed.
5. Subtype 5 will initiate calculation of a post-yaw-flip IMC set. OATS will automatically send messages 33 and 62 when the calculation is completed.
6. See Section 4.3.2.2.1 for the IMC set identifier format.

Message 164 – IMC, SMC, or SCC Set Enabled or Yaw-Flip State (1 of 2)

GIMTACS/GTACS sends OATS one of the Message 164 subtypes whenever it enables an IMC, SMC, or SCC coefficient set on any one satellite, or the orientation status, normal or flipped, has changed. Note that SMC and SCC options (subtypes 101 and 102) are only valid for GOES I-M. The Message 164 includes the enable time and either the IMC, SMC, or SCC set identifier or the yaw-flip status. In the case of an IMC set, GIMTACS/GTACS also sends a Message 110-6 to the SPS. The Message 164 data block layout and field definitions follow.

```
HEADER BLOCK FIELDS:
      MESSAGE SEQUENCE NO.          = 1-65535
      SATELLITE ID                  = 8,9,10,11,12,13,14,15 (I-P)
      SOURCE                        = 10 (GIMTACS)
                                    = 90-101 (GTACS)
      DESTINATION                   = 41,42,43,44,45,46,47,48,49,50 (I-M OATS)
                                    = 32 (ALL OATS) (GOES N-P)
                                    = 75-85 (N-P OATS)
      NO. OF HALF-WORDS             = 6
      MESSAGE TYPE                  = 164
      MESSAGE SUBTYPE               = 0 - IMC SET
                                    = 101 - SMC SET (GOES I-M)
                                    = 102 - SCC SET (GOES I-M)
                                    = 103 - YAW-FLIP STATE
      TRACER                        = BLANKS
      MESSAGE COUNT                 = 1
      END OF MESSAGE                = TRUE
      ROUTING ID                    = N/A
DATA BLOCK LAYOUT:
   HALF-
   WORD NO. MSB                                          LSB
            0  1  2  3  4  5  6  7  8  9 10 11 12 13 14 15
          |-----------------------------------------------|
        1 |                      YEAR                     |
          |-----------------------------------------------|
        2 |  |         DAY OF YEAR            |  HR (10s) |
          |-----------------------------------------------|
        3 |  HR (1s)  |        MINUTES         |  SEC (10s)|
          |-----------------------------------------------|
        4 |  SEC (1s) |               MSECS                |
          |-----------------------------------------------|
        5 |            IMC, SMC, or SCC SET IDENTIFIER     |
        6 |                 YAW-FLIP STATE                 |
          |-----------------------------------------------|
```

DATA ITEM	FORMAT	VALIDATION	UNITS
SET ENABLE TIME OF YEAR	BCD	1989-2025	YEAR
DAY OF YEAR	BCD	1-366	DAY
HOUR	BCD	0-23	HOURS
MINUTES	BCD	0-59	MIN
SECONDS	BCD	0-59	SEC
MSEC	BCD	0-999	MSEC
IMC/SMC/SCC SET IDENTIFIER OR YAW-FLIP STATUS	ASCII	ANNN FOR IMC	N/A
		NNNA FOR SMC (GOES I-M)	N/A
		NNNC FOR SCC (GOES I-M)	N/A
		NORM FOR NORMAL	N/A
		FLIP FOR FLIP STATE	N/A

Message 164 – IMC, SMC, or SCC Set Enabled or Yaw-Flip State (2 of 2)

Notes:

1. GIMTACS/GTACS notifies OATS with this message upon enabling an IMC coefficients set on the satellite. If the IMC set type is a 3 or 4 (short span attitude adjustment), GIMTACS/GTACS implements the associated correction to the star commands at the same time. Additionally, GIMTACS/GTACS sends a start O&A message (Message 110) to the SPS.

2. When GIMTACS uploads an SMC or SCC set received from OATS, it informs OATS by using this message. The time in the SMC or SCC message is the current Universal Time Code (UTC) time when the SMC or SCC set was uploaded.

3. See Section 4.3.2.2.1 for the IMC set identifier format.

4. When transmitting the yaw-flip state, the character string ”NORM“ is sent for a spacecraft in the upright, non-flipped state, and the character string ”FLIP” is sent for a spacecraft in a flipped state.

Message 165 – IMC or MMC Status Change (1 of 2)

GIMTACS/GTACS has the ability to enable and disable IMC separately for the Imager and Sounder. Additionally, GIMTACS has the ability to enable and disable MMC separately for the Imager and Sounder. When GIMTACS/GTACS commands a status change, it notifies OATS through a Message 165. When a Message 165 indicates re-enabling of IMC for either instrument, GIMTACS/GTACS also sends OATS a Message 164 indicating which IMC set was enabled when the IMC was restored to operation. The Message 165 data block layout and field definitions follow.

```
HEADER BLOCK FIELDS:
      MESSAGE SEQUENCE NO.          = 1-65535
      SATELLITE ID                  = 8,9,10,11,12,13,14,15 (I-P)
      SOURCE                        = 10 (GIMTACS)
                                    = 90-101 (GTACS)
      DESTINATION                   = 32 (ALL OATS)
      NO. OF HALF-WORDS             = 8
      MESSAGE TYPE                  = 165
      MESSAGE SUBTYPE               = 1 - IMAGER
                                    = 2 - SOUNDER
      TRACER                        = BLANKS
      MESSAGE COUNT                 = 1
      END OF MESSAGE                = TRUE
      ROUTING ID                    = N/A

DATA BLOCK LAYOUT:
   HALF-
   WORD NO. MSB                                          LSB
             0  1  2  3  4  5  6  7  8  9 10 11 12 13 14 15
           |-----------------------------------------------|
        1  |                     YEAR                      |
           |-----------------------------------------------|
        2  |         DAY OF YEAR            |  HR (10s)    |  IMC/MMC STATUS
           |-----------------------------------------------|  CHANGE
        3  |  HR (1s)  |        MINUTES     |  SEC (10s)   |  TIME
           |-----------------------------------------------|
        4  |  SEC (1s) |               MSECS               |
           |-----------------------------------------------|
        5  |                  IMC STATUS                   |
        6  |                                               |
           |-----------------------------------------------|
        7  |                  MMC STATUS/SPARE             |
        8  |                                               |
           |-----------------------------------------------|
```

DATA ITEM	FORMAT	VALIDATION	UNITS
IMC/MMC STATUS CHANGE TIME YEAR	BCD	1989-2025	YEAR
DAY OF YEAR	BCD	1-366	DAY
HOUR	BCD	0-23	HOURS
MINUTES	BCD	0-59	MIN
SECONDS	BCD	0-59	SEC
MSEC	BCD	0-999	MSEC
IMC STATUS	I*4	0 - NO CHANGE 1 - ENABLED 2 - DISABLED	N/A
MMC STATUS (GOES I-M)	I*4	0 - NO CHANGE 1 - ENABLED 2 – DISABLED	N/A
SPARE (GOES N-P)	I*4	N/A	N/A

Message 165 – IMC or MMC Status Change (2 of 2)

Notes:

1. When GIMTACS/GTACS enables or disables IMC, it sends a message to OATS indicating the change. An enable message sent after IMC has been off for both instruments should be followed by an IMC set enable Message 164 so OATS knows which IMC set was enabled with restoration of the IMC operation to the instrument. It is impossible to enable different sets for the two instruments.

2. When GIMTACS enables or disables MMC, it sends a message to OATS indicating the change. An enable message sent after MMC has been off for both instruments should be followed by an MMC set enable Message 164 so OATS knows which MMC set was enabled with restoration of the MMC operations to the instrument. It is impossible to enable different sets for the two instruments.

3. See Section 4.3.2.2.1 for the IMC set identifier format.

Messages 166 & 176 – DIRA Calibration Data Response (GOES I-M)

GIMTACS provides OATS with DIRA telemetry data in response to a Message 66. The Message 66 may contain more than one PID, grouped by multiple requested response subtypes. GIMTACS responds with a separate Message 166 for each PID, reflecting the requested subtype. When GIMTACS finishes responding with all PIDs and all subtypes, it sends a DIRA data completion Message 176 to OATS. Message 166 data block layouts and field definitions follow.

Message 166 – DIRA Calibration Data Response (GOES I-M) (1 of 2)

```
HEADER BLOCK FIELDS:
      MESSAGE SEQUENCE NO.          = 1-65535
      SATELLITE ID                  = 8,9,10,11,12 (I-M)
      SOURCE                        = 10 (GIMTACS)
      DESTINATION                   = 41,42,43,44,45,46,47,48,49,50 (OATS)
      NO. OF HALF-WORDS             = UP TO 1608 (SEE NOTES)
      MESSAGE TYPE                  = 166
      MESSAGE SUBTYPE               = 7 - ACCUMULATED DIRA PITCH, ROLL
                                          AND YAW TLM FORMAT SELECTION
                                    = 8 - DSS YAW AND PITCH, ES ROLL,
                                          ACCUMULATED DIRA PITCH, ROLL,
                                          AND YAW TLM FORMAT SELECTION
      TRACER                        = AS PROVIDED IN MSG 66
      MESSAGE COUNT                 = 1
      END OF MESSAGE                = TRUE
      ROUTING ID                    = N/A

DATA BLOCK LAYOUT:
    HALF-
    WORD NO. MSB                                        LSB
              0  1  2  3  4  5  6  7  8  9 10 11 12 13 14 15
            |-----------------------------------------------|
         1  |                     YEAR                      |
            |-----------------------------------------------|
         2  |         DAY OF YEAR            | HR (10s)     |
            |-----------------------------------------------|
         3  | HR (1s)   |        MINUTES        | SEC (10s) |
            |-----------------------------------------------|
         4  | SEC (1s)  |               MSECS               |
            |-----------------------------------------------|
         5  |   TELEMETRY PARAMETER IDENTIFICATION (PID)    |
         6  |
            |-----------------------------------------------|
         7  |     NUMBER OF DATA POINTS IN MESSAGE (N)      |
            |-----------------------------------------------|
         8  |     MESSAGE SEQUENCE NUMBER FOR THIS PID      |
            |-----------------------------------------------|
         9  |     FIRST DATA VALUE (IN ENGINEERING UNITS)   |
        10  |
            |-----------------------------------------------|
        11  |    TIME INCREMENT FROM PREVIOUS DATA POINT    |
        12  |
            |-----------------------------------------------|
        13  |    SECOND DATA VALUE (IN ENGINEERING UNITS)   |
        14  |
            |-----------------------------------------------|
        15  |  TIME OFFSETS AND DATA VALUES IN ENGINEERING  |
         :  |        UNITS FOR DATA POINTS 3-N              |
      4N+6  |-----------------------------------------------|
```

TIME OF FIRST DATA POINT IN THIS MESSAGE

Message 166 – DIRA Calibration Data Response (GOES I-M) (2 of 2)

DATA ITEM	FORMAT	VALIDATION	UNITS
TIME OF DATA POINT YEAR	BCD	1989-2025	YEAR
DAY OF YEAR	BCD	1-366	DAY
HOUR	BCD	0-23	HOURS
MINUTES	BCD	0-59	MIN
SECONDS	BCD	0-59	SEC
MSEC	BCD	0-999	MSEC
TLM PARAMETER ID (PID)	I*4	1-9999	N/A
NUMBER OF DATA POINTS	I*2	0-400	N/A
MSG SEQ NO. FOR THIS PID	I*2	1-40	N/A
ENGINEERING VALUES OF DATA	R*4	VARIOUS	VARIOUS[7]
TIME INCREMENT	R*4	0.512-300.0	SEC

Notes:

1. The tracer field should be returned exactly as found in the corresponding Message 66.
2. Message 66 generally contains multiple PIDs. Separate response messages are generated for each PID.
3. See Message 66 notes for a description of the telemetry parameters identified by the PIDs.
4. When all messages for all PIDs have been sent, a Message 176 is sent indicating completion.
5. The message length is given by $4N + 8$, where N is the number of data points in the message. The maximum length is 1608 16-bit half-words, when $N = 400$.
6. When the number of data points is zero, the message ends at half-word 8. The message is always sent, even if the number of data points is zero.
7. The units specified for engineering values are degrees for roll, pitch, and yaw. Digital Sun Sensor (DSS) pitch and yaw and Earth Sensor (ES) roll are also specified in degrees. TLM format selection is reported as a decimal integer with validation zero to seven.

Messages 167 & 177 – Trim Tab Data Response (GOES I-M)

GIMTACS sends OATS trim tab telemetry data in response to a Message 67, Subtype 1, and thruster firing history data in response to a Message 67, Subtype 2. Each of the subtypes is treated by GIMTACS as an entirely separate request with its own response and completion messages.

The trim tab telemetry data request message may contain more than one PID, grouped by multiple requested response subtypes. GIMTACS responds with a separate Message 167 for each PID, reflecting the requested subtype. When GIMTACS is finished responding to the request (all PIDS and all telemetry subtypes), it sends OATS a Message 177.

The thruster firing history data request message is for a single time span. GIMTACS responds with a separate Message 167, Subtype 2 for the thruster firing data. The response may span several messages. When GIMTACS is finished responding to the request, it sends OATS a Message 177.

The Message 167-1 and 167-2 data block layouts and field definitions follow.

Message 167-1 – Trim Tab Data Response (GOES I-M) (1 of 2)

```
HEADER BLOCK FIELDS:
      MESSAGE SEQUENCE NO.          = 1-65535
      SATELLITE ID                  = 8,9,10,11,12 (I-M)
      SOURCE                        = 10 (GIMTACS)
      DESTINATION                   = 41,42,43,44,45,46,47,48,49,50 (OATS)
      NO. OF HALF-WORDS             = UP TO 1608 (SEE NOTES)
      MESSAGE TYPE                  = 167
      MESSAGE SUBTYPE               = 1 - PROPELLANT TANK
                                    = 4 - TRIM TAB POSITION
                                    = 5 - MAG. TORQUER
                                    = 6 - WHEEL SPEED
                                    = 9 - MAGNETOMETER
      TRACER                        = AS PROVIDED IN MSG 67
      MESSAGE COUNT                 = 1
      END OF MESSAGE                = TRUE
      ROUTING ID                    = N/A
```

Message 167-1 – Trim Tab Data Response (GOES I-M) (2 of 2)

```
DATA BLOCK LAYOUT:
 HALF-
 WORD NO. MSB                                          LSB
          0  1  2  3  4  5  6  7  8  9 10 11 12 13 14 15
         |-----------------------------------------------|-
      1  |                     YEAR                      | |
         |-----------------------------------------------| |TIME OF
      2  |  |         DAY OF YEAR            |  HR (10s) | |FIRST
         |-----------------------------------------------| |DATA
      3  |  HR (1s)  |        MINUTES         |  SEC (10s)| |POINT
         |-----------------------------------------------| |IN THIS
      4  |  SEC (1s) |               MSECS               | |MESSAGE
         |-----------------------------------------------|-
      5  |   TELEMETRY PARAMETER IDENTIFICATION (PID)    |
      6  |                                               |
         |-----------------------------------------------|
      7  |        NUMBER OF DATA POINTS IN MESSAGE       |
         |-----------------------------------------------|
      8  |        MESSAGE SEQUENCE NUMBER FOR THIS PID   |
         |-----------------------------------------------|
      9  |     FIRST DATA VALUE (IN ENGINEERING UNITS)   |
     10  |                                               |
         |-----------------------------------------------|
     11  |    TIME INCREMENT FROM PREVIOUS DATA POINT    |
     12  |                                               |
         |-----------------------------------------------|
     13  |    SECOND DATA VALUE (IN ENGINEERING UNITS)   |
     14  |                                               |
         |-----------------------------------------------|
     15  |  TIME OFFSETS AND DATA VALUES IN ENGINEERING  |
      :  |        UNITS FOR DATA POINTS 3-N              |
   4N+6  |-----------------------------------------------|
```

DATA ITEM	FORMAT	VALIDATION	UNITS
TIME OF DATA POINT YEAR	BCD	1989-2025	YEAR
DAY OF YEAR	BCD	1-366	DAY
HOUR	BCD	0-23	HOURS
MINUTES	BCD	0-59	MIN
SECONDS	BCD	0-59	SEC
MSEC	BCD	0-999	MSEC
TLM PARAMETER ID (PID)	I*4	1-9999	N/A
NUMBER OF DATA POINTS	I*2	0-400	N/A
MSG SEQ NO. FOR THIS PID	I*2	1-40	N/A
ENGINEERING VALUES OF DATA	R*4	VARIOUS	VARIOUS
TIME INCREMENT	R*4	0.512-300.0	SEC

Notes:

1. The tracer field should be returned exactly as found in the corresponding Message 67.
2. A request message generally contains more than one PID. One or more separate response messages are then generated for each requested PID.
3. See notes for Message 67 for the description of the telemetry parameters that are identified by the PIDs.
4. Although both PIDs for trim tab positions and for each of the tank pressures are included in the data request, only one PID and its data will be returned depending on data availability and quality.
5. When all messages for all PIDs have been sent, completion is indicated by the trim tab data completion Message 177.
6. The message length is given by $4N + 8$, where N is the number of data points in the message. It has a maximum length of 1608 16-bit half-words when $N = 400$.
7. When the number of data points is zero, the message ends at half-word 8. The message is always sent, even if the number of data points is zero.

Message 167-2 – Trim Tab Data Response (GOES I-M) (1 of 2)

```
HEADER BLOCK FIELDS:
      MESSAGE SEQUENCE NO.          = 1-65535
      SATELLITE ID                  = 8,9,10,11,12 (I-M)
      SOURCE                        = 10 (GIMTACS)
      DESTINATION                   = 41,42,43,44,45,46,47,48,49,50 (OATS)
      NO. OF HALF-WORDS             = UP TO 804 (SEE NOTES)
      MESSAGE TYPE                  = 167
      MESSAGE SUBTYPE               = 2 - THRUSTER FIRING HISTORY DATA
      TRACER                        = AS PROVIDED IN MSG 67
      MESSAGE COUNT                 = 1
      END OF MESSAGE                = TRUE
      ROUTING ID                    = N/A

DATA BLOCK LAYOUT:
    HALF-
    WORD NO. MSB                                          LSB
             0  1  2  3  4  5  6  7  8  9 10 11 12 13 14 15
            |-----------------------------------------------|
         1  |        NUMBER OF FIRINGS IN TIME SPAN (K)     |
         2  |                                               |
            |-----------------------------------------------|
         3  |                    SPARE                      |
         4  |                                               |
            |-----------------------------------------------|-
         5  |                    YEAR                       | |
            |-----------------------------------------------| | BURN
         6  |  |         DAY OF YEAR            |  HR (10s) | | START
            |-----------------------------------------------| |
         7  |  HR (1s)  |        MINUTES        |  SEC (10s) | | TIME
            |-----------------------------------------------| |
         8  |  SEC (1s) |              MSECS                | |
            |-----------------------------------------------|-
         9  |             FIRING SEQUENCE NUMBER            |
            |-----------------------------------------------|
        10  |          NUMBER OF THRUSTERS FIRED (N)        |
            |-----------------------------------------------|
        11  |                 BURN DURATION                 |
        12  |                                               |
            |-----------------------------------------------|
        13  |                1ST THRUSTER ID                |
            |-----------------------------------------------|
        14  |     NO. OF ON-OFF CYCLES FOR 1ST THRUSTER     |
            |-----------------------------------------------|
        15  |     TOTAL FIRING TIME FOR 1ST THRUSTER        |
        16  |                                               |
            |-----------------------------------------------|
        17  |         THRUSTER ID, TOTAL FIRING TIME        |
         :  |         & ON-OFF CYCLES FOR THE 2ND TO        |
     12+4N  |        THE N-TH THRUSTERS IN THE FIRING       |
            |-----------------------------------------------|
     13+4N  |           REPEAT FROM HALF-WORD 5 FOR         |
         :  |              THE SUBSEQUENT FIRINGS           |
  4+8K+4NK  |                  (2 THROUGH K)                |
            |-----------------------------------------------|
```

Message 167-2 – Trim Tab Data Response (GOES I-M) (2 of 2)

DATA ITEM	FORMAT	VALIDATION	UNITS
NUMBER OF FIRINGS	I*4	0-25	N/A
FIRING SEQUENCE NUMBER	I*2	1-25	N/A
NUMBER OF THRUSTER FIRED	I*2	1-6	N/A
TIME OF DATA POINT YEAR	BCD	1989-2025	YEAR
DAY OF YEAR	BCD	1-366	DAY
HOUR	BCD	0-23	HOURS
MINUTES	BCD	0-59	MIN
SECONDS	BCD	0-59	SEC
MSEC	BCD	0-999	MSEC
BURN DURATION	I*4	1-2000000	MSEC
THRUSTER ID	ASCII	2A-7A, 2B-7B	N/A
TOTAL THRUSTER FIRING TIME	I*4	1-2000000	MSEC
NUMBER OF ON/OFF CYCLES	I*2	>0	N/A

Notes:

1. The number of firings is the number of wheel unloads in a day. The OATS database can handle up to 25 uncommanded firings per day. The number of wheel unloads should never exceed 25 in a single day, even during the first few days on orbit.

2. The thruster firing data for Message 167 consists solely of the uncommanded thruster firing data for wheel unloads. Thruster firing data for stationkeeping mode activities are not reported.

3. The tracer field should be returned exactly as found in the corresponding Message 67.

4. When all messages for this data subtype have been sent, completion is indicated by the trim tab data completion Message 177.

5. The message length is given by $4 + 8K + 4NK$, where K represents the number of firings and N is the number of thrusters. It has a maximum length of 804 16-bit half-words when $K = 25$ and $N = 6$.

Message 168 – Momentum Telemetry Responses (GOES N-P) (1 of 3)

GTACS transmit Message 168 to OATS approximately every 6 minutes. The data will be selected from the first half of the first valid major frame containing valid data. OATS uses the information in the message to plan the next daily momentum-dumping maneuver.

```
HEADER BLOCK FIELDS:
      MESSAGE SEQUENCE NO.          = 1-65535
      SATELLITE ID                  = 13,14,15 (N-P)
      SOURCE                        = 90 - 101 (GTACS)
      DESTINATION                   = 32 (All OATS)
      NO. OF HALF-WORDS             = 122
      MESSAGE TYPE                  = 168
      MESSAGE SUBTYPE               = 0
      TRACER                        = ASCII BLANKS
      MESSAGE COUNT                 = 1
      END OF MESSAGE                = TRUE
      ROUTING ID                    = N/A
```

DATA BLOCK LAYOUT:

HALF-WORD NO.	MSB 0	1	2	3	4	5	6	7	8	9	10	11	12	13	14	LSB 15
1	YEAR															
2		DAY OF YEAR											HR(10s)			
3	HR(1s)				MINUTES								SEC(10s)			
4	SEC(1s)				MSECS											
5	NUMBER OF LRV'S INCLUDED IN MESSAGE (k)															
6																
7	LRV #1															
8																
9	VALUE															
10																
11	REPEAT WORDS 7 THROUGH 10 FOR THE REMAINING k-1 LRV'S															
:																
6+4(k)																

Message 168 – Momentum Telemetry Responses (GOES N-P) (2 of 3)

DATA ITEM	FORMAT	VALIDATION	UNITS
YEAR	BCD	1989-2025	YEAR
DAY OF YEAR	BCD	1-366	DAY
HOUR	BCD	0-23	HOUR
MINUTE	BCD	0-59	MIN
SECONDS	BCD	0-59	SEC
MILLISECONDS	BCD	0-999	MSEC
NUMBER OF LRVs INCLUDED IN MESSAGE (k)	I*4	1-29	N/A
LRV	I*4	10000 - 99999	N/A
VALUE	R*4	See notes	N/A

Notes:

1. The normal telemetry variables and associated LRVs are:

Mnemoic	LRV	Validation	Units
Sn_MDX_CURRENT_MODE (S/C mode)	n0066	0-7	N/A
Sn_STR_CMDQUATREF2BDY1	n2025	-1 to +1	N/A
Sn_STR_CMDQUATREF2BDY2	n2026	-1 to +1	N/A
Sn_STR_CMDQUATREF2BDY3	n2027	-1 to +1	N/A
Sn_STR_CMDQUATREF2BDY4	n2028	-1 to +1	N/A
Sn_ROLL_MOM_IN_ECI	n2150	-200 to + 200	NMS
Sn_PITCH_MOM_IN_ECI	n2151	-200 to + 200	NMS
Sn_YAW_MOM_IN_ECI	n2152	-200 to + 200	NMS
Sn_ROLL_MOM_IN_BODY	n2068	-200 to + 200	NMS
Sn_PITCH_MOM_IN_BODY	n2069	-200 to + 200	NMS
Sn_YAW_MOM_IN_BODY	n2070	-200 to + 200	NMS
SOLAR_ARRAY_DRIVE_ANGLE	n3148	0 to 360	Deg
Sn_YAW_FLIP_FLAG	n8793	0-Inverted, 1-Normal	N/A
LPT_1_PRESSURE (fuel 1)	32010	1000 to 2000	KPa
LPT_2_PRESSURE (fuel 2)	32011	1000 to 2000	KPa
LPT_3_PRESSURE (ox 1)	32012	1000 to 2000	KPa
LPT_4_PRESSURE (ox 2)	32013	1000 to 2000	KPa
FUEL_TANK_1_TEMP_A	42060	-10 to +50	Deg C
FUEL_TANK_1_TEMP_B	42061	-10 to +50	Deg C
FUEL_TANK_1_TEMP_C	42072	-10 to +50	Deg C
FUEL_TANK_2_TEMP_A	42062	-10 to +50	Deg C
FUEL_TANK_2_TEMP_B	42063	-10 to +50	Deg C
FUEL_TANK_2_TEMP_C	42073	-10 to +50	Deg C
OX_TANK_1_TEMP_A	42064	-10 to +50	Deg C
OX_TANK_1_TEMP_B	42065	-10 to +50	Deg C
OX_TANK_1_TEMP_C	42074	-10 to +50	Deg C
OX_TANK_2_TEMP_A	42066	-10 to +50	Deg C
OX_TANK_2_TEMP_B	42067	-10 to +50	Deg C
OX_TANK_2_TEMP_C	42075	-10 to +50	Deg C

Message 168 – Momentum Telemetry Responses (GOES N-P) (3 of 3)

2. The leading digit of ACE LRVs and names in the above table, designated as “n”, will be 1 for ACE 1 and 2 for ACE 2. GTACS will only send the data for the active ACE.

3. GTACS will transmit Message 168 to OATS approximately every 6 minutes. The data will be selected from the first half of the first major frame in which all MDX_STATUS, attitude quaternion, ECI momentum, and yaw-flip are marked as valid. The Sn_STR_CMDQUATREF2BDY values will be selected from the minor frame (5) just prior to that of the ECI momentum samples (minor frame 6). For those tank pressures or temperatures that are invalid, the values should be set to –9999.

4. The listed time is the receive time associated with the beginning of the minor frame (6) of the ECI momentum sample.

Message 170 – Propulsion Subsystem Data Response (GOES N-P) (1 of 2)

GTACS sends OATS propulsion subsystem or thruster firing history telemetry data in response to a Message 70-1. The Message 70-1 may contain more than one LRV grouped by multiple requested response subtypes. However, GTACS responds with a separate Message 170 for each LRV. Each Message 170 reflects the requested subtype. When GTACS is finished responding to the request (all LRVs and all telemetry subtypes), it sends OATS a Message 180. The Message 170 data block layout and field definitions are as follows:

```
HEADER BLOCK FIELDS:
      MESSAGE SEQUENCE NO.          = 1-65535
      SATELLITE ID                  = 13,14,15 (N-P)
      SOURCE                        = 90 - 101 (GTACS)
      DESTINATION                   = 75 - 85 (Requesting OATS)
      NO. OF HALF-WORDS             = UP TO 1606 (SEE NOTES)
      MESSAGE TYPE                  = 170
      MESSAGE SUBTYPE               = RESPONSE SUBTYPE (SEE NOTES)
      TRACER                        = AS PROVIDED IN MSG 70
      MESSAGE COUNT                 = 1
      END OF MESSAGE                = TRUE
      ROUTING ID                    = N/A
```

DATA BLOCK LAYOUT:

HALF-WORD NO.	MSB 0 1 2 3 4 5 6 7 8 9 10 11 12 13 14 LSB 15	
1	YEAR	TIME OF FIRST DATA POINT IN THIS MESSAGE
2	DAY OF YEAR / HR(10s)	
3	HR(1s) / MINUTES / SEC(10s)	
4	SEC(1s) / MSECS	
5 6	TELEMETRY PARAMETER IDENTIFICATION (LRV)	
7	NUMBER OF DATA POINTS IN MESSAGE	
8	MESSAGE SEQUENCE NUMBER FOR THIS LRV	
9 10	FIRST DATA VALUE (IN ENGINEERING UNITS)	
11 12	TIME INCREMENT BETWEEN 1ST AND 2ND DATA POINT	
13 14	SECOND DATA VALUE (IN ENGINEERING UNITS)	
15 : 4N+6	TIME OFFSETS AND DATA VALUES IN ENGINEERING UNITS FOR DATA POINTS 3-N	

Message 170 – Propulsion Subsystem Data Response (GOES N-P) (2 of 2)

DATA ITEM	FORMAT	VALIDATION	UNITS
TIME OF DATA POINT YEAR	BCD	1989-2025	YEAR
DAY OF YEAR	BCD	1-366	DAY
HOUR	BCD	0-23	HOURS
MINUTES	BCD	0-59	MIN
SECONDS	BCD	0-59	SEC
MILLISECONDS	BCD	0-999	MSEC
TLM PARAMETER ID (LRV)	I*4	10000-99999	N/A
NUMBER OF DATA POINTS	I*2	0-400	N/A
MSG SEQ NO. FOR THIS LRV	I*2	1-40	N/A
ENGINEERING VALUES OF DATA	R*4	VARIOUS	VARIOUS
TIME INCREMENT	R*4	1.024-300.0	SEC

Notes:

1. The tracer field is returned exactly as found in the corresponding Message 70.
2. Message Subtype in the header is the "response subtype" value returned for request data correlation. This value is embedded in Message 70, half-word 9.
3. A request message generally contains a number of LRVs, resulting in one or more separate response messages for each LRV.
4. See the Message 70 notes for a description of the telemetry parameters identified by the LRVs.
5. When messages have been sent for all LRVs, completion is indicated by the propulsion subsystem data completion Message 180.
6. The message length is given by 4N + 6, with a maximum length of 1606 16-bit half-words when N = 400.
7. When the number of data points is zero, the message ends at half-word 8. The message is always sent, however, even if the number of data points is zero.
8. Integer values (e.g., number of pulses) are sent as real values.

Messages 170 & 180 – Propulsion Subsystem Data Response (GOES I-M)

GIMTACS sends OATS propulsion subsystem telemetry data in response to a Message 70-1 and thruster firing history data in response to a Message 70-2. Each subtype is treated by GIMTACS as an entirely separate request with its own response and completion messages.

The Message 70-1 may contain more than one PID grouped by multiple requested response subtypes. However, GIMTACS responds with a separate Message 170 for each PID. Each Message 170 reflects the requested subtype. When GIMTACS is finished responding to the request (all PIDs and all telemetry subtypes), it sends OATS a Message 180.

The thruster firing history data request message is for a single time span. GIMTACS responds with a separate Message 170-2 for the thruster firing data. The response may span several messages. When GIMTACS is finished responding to the request, it sends OATS a Message 180. The Message 170-1 and 170-2 data block layouts and field definitions follow.

Message 170-1 – Propulsion Subsystem Data Response (GOES I-M) (1 of 2)

```
HEADER BLOCK FIELDS:
      MESSAGE SEQUENCE NO.          = 1-65535
      SATELLITE ID                  = 8,9,10,11,12 (I-M)
      SOURCE                        = 10 (GIMTACS)
      DESTINATION                   = 41,42,43,44,45,46,47,48,49,50 (OATS)
      NO. OF HALF-WORDS             = UP TO 1608 (SEE NOTES)
      MESSAGE TYPE                  = 170
      MESSAGE SUBTYPE               = 1 - PROPELLANT TANK DATA
                                    = 3 - SADA DATA
      TRACER                        = AS PROVIDED IN MSG 70
      MESSAGE COUNT                 = 1
      END OF MESSAGE                = TRUE
      ROUTING ID                    = N/A

DATA BLOCK LAYOUT:
 HALF-
 WORD NO. MSB                                          LSB
           0  1  2  3  4  5  6  7  8  9 10 11 12 13 14 15
         |-----------------------------------------------|_
      1  |                     YEAR                      | |
         |-----------------------------------------------| |TIME OF
      2  |  |         DAY OF YEAR            |  HR (10s) | |FIRST
         |-----------------------------------------------| |DATA
      3  |  HR (1s)  |        MINUTES         |  SEC (10s)| |POINT
         |-----------------------------------------------| |IN THIS
      4  |  SEC (1s) |               MSECS               | |MESSAGE
         |-----------------------------------------------|_
      5  |   TELEMETRY PARAMETER IDENTIFICATION (PID)    |
      6  |
         |-----------------------------------------------|
      7  |        NUMBER OF DATA POINTS IN MESSAGE       |
         |-----------------------------------------------|
      8  |        MESSAGE SEQUENCE NUMBER FOR THIS PID   |
         |-----------------------------------------------|
```

Message 170-1 – Propulsion Subsystem Data Response (GOES I-M) (2 of 2)

```
HALF-
WORD NO. MSB                                          LSB
         0  1  2  3  4  5  6  7  8  9 10 11 12 13 14 15
        |-----------------------------------------------|—
     9  |     FIRST DATA VALUE (IN ENGINEERING UNITS)   |
    10  |                                               |
        |-----------------------------------------------|
    11  |    TIME INCREMENT FROM PREVIOUS DATA POINT    |
    12  |                                               |
        |-----------------------------------------------|
    13  |    SECOND DATA VALUE (IN ENGINEERING UNITS)   |
    14  |                                               |
        |-----------------------------------------------|
    15  |  TIME OFFSETS AND DATA VALUES IN ENGINEERING  |
     :  |         UNITS FOR DATA POINTS 3-N             |
  4N+6  |-----------------------------------------------|
```

DATA ITEM	FORMAT	VALIDATION	UNITS
TIME OF DATA POINT YEAR	BCD	1989-2025	YEAR
DAY OF YEAR	BCD	1-366	DAY
HOUR	BCD	0-23	HOURS
MINUTES	BCD	0-59	MIN
SECONDS	BCD	0-59	SEC
MSEC	BCD	0-999	MSEC
TLM PARAMETER ID (PID)	I*4	1-9999	N/A
NUMBER OF DATA POINTS	I*2	0-400	N/A
MSG SEQ NO. FOR THIS PID	I*2	1-40	N/A
ENGINEERING VALUES OF DATA	R*4	VARIOUS	VARIOUS
TIME INCREMENT	R*4	0.512-300.0	SEC

Notes:

1. The tracer field should be returned exactly as found in the corresponding Message 70.
2. A request message generally contains multiple PIDs, resulting in separate response messages for each PID.
3. See the Message 70 notes for the telemetry parameters description identified by the PIDs.
4. Although both PIDs for each of the tank pressures are included in the data request, only one PID and its data are returned, depending on data availability and quality.
5. When messages have been sent for all PIDs, completion is indicated by the propulsion subsystem data completion Message 180.
6. The message length is given by $4N + 8$, where N is the number of data points in the message. It has a maximum length of 1608, 16-bit half-words when $N = 400$.
7. When the number of data points is zero, the message ends at half-word eight. The message is always sent, however, even if the number of data points is zero.

Message 170-2 – Propulsion Subsystem Data Response (GOES I-M) (1 of 2)

```
HEADER BLOCK FIELDS:
      MESSAGE SEQUENCE NO.          = 1-65535
      SATELLITE ID                  = 8,9,10,11,12 (I-M)
      SOURCE                        = 10 (GIMTACS)
      DESTINATION                   = 41,42,43,44,45,46,47,48,49,50 (OATS)
      NO. OF HALF-WORDS             = UP TO 324 (SEE NOTES)
      MESSAGE TYPE                  = 170
      MESSAGE SUBTYPE               = 2 - THRUSTER FIRING HISTORY DATA
      TRACER                        = AS PROVIDED IN MSG 70
      MESSAGE COUNT                 = 1
      END OF MESSAGE                = TRUE
      ROUTING ID                    = N/A

DATA BLOCK LAYOUT:
 HALF-
 WORD NO. MSB                                          LSB
          0  1  2  3  4  5  6  7  8  9 10 11 12 13 14 15
         |-----------------------------------------------|
    1-2  |          NUMBER OF FIRINGS IN TIME SPAN (K)   |
         |-----------------------------------------------|
    3-4  |                    SPARE                      |
         |-----------------------------------------------|_
      5  |                    YEAR                       | |
         |-----------------------------------------------| |  BURN
      6  |  |         DAY OF YEAR            |  HR (10s) | |  START
         |-----------------------------------------------| |
      7  |  HR (1s)  |        MINUTES         |  SEC (10s) | |  TIME
         |-----------------------------------------------| |
      8  |  SEC (1s) |               MSECS                | |
         |-----------------------------------------------|_
      9  |          FIRING SEQUENCE NUMBER               |
         |-----------------------------------------------|
     10  |          NUMBER OF THRUSTERS FIRED (N)        |
         |-----------------------------------------------|
  11-12  |                 BURN DURATION                 |
         |-----------------------------------------------|
     13  |                1ST THRUSTER ID                |
         |-----------------------------------------------|
     14  |     NO. OF ON-OFF CYCLES FOR 1ST THRUSTER     |
         |-----------------------------------------------|
  15-16  |     TOTAL FIRING TIME FOR 1ST THRUSTER        |
         |-----------------------------------------------|
     17  |THRUSTER ID, TOTAL FIRING TIME & ON-OFF CYCLES |
  12+4N  |FOR THE 2ND TO THE N-TH THRUSTERS IN THE FIRING|
         |-----------------------------------------------|
  13+4N  |  REPEAT FROM HALF-WORD 5 FOR THE SUBSEQUENT   |
         |            FIRINGS (2 THROUGH K)              |
  4+8K+  |                                               |
   4NK   |-----------------------------------------------|
```

Message 170-2 – Propulsion Subsystem Data Response (GOES I-M) (2 of 2)

DATA ITEM	FORMAT	VALIDATION	UNITS
NUMBER OF FIRINGS	I*4	1-10	N/A
FIRING SEQUENCE NUMBER	I*2	1-10	N/A
NUMBER OF THRUSTER FIRED	I*2	1-6	N/A
TIME OF DATA POINT YEAR	BCD	1989-2025	YEAR
DAY OF YEAR	BCD	1-366	DAY
HOUR	BCD	0-23	HOURS
MINUTES	BCD	0-59	MIN
SECONDS	BCD	0-59	SEC
MSEC	BCD	0-999	MSEC
BURN DURATION	I*4	1-2000000	MSEC
THRUSTER ID	ASCII	2A-7A, 2B-7B	N/A
TOTAL THRUSTER FIRING TIME	I*4	1-2000000	MSEC
NUMBER OF ON/OFF CYCLES	I*2	>0	N/A

Notes:

1. Number of firings is the sequence number of the maneuver. The OATS database can handle up to 10 firings per maneuver. Under normal circumstances, the sequence number should never exceed 10 in a maneuver.

2. The Message 166 thruster firing data is solely for stationkeeping mode activities. Uncommanded thruster firing data for wheel unloads are not reported.

3. The tracer field should be returned exactly as found in the corresponding Message 70.

4. When all messages for this data subtype have been sent, completion is indicated by the propulsion subsystem data completion Message 180.

5. The message length is given by $4 + 8K + 4NK$, where K is the number of firings and N is the number of thrusters. Maximum length is 324 16-bit half-words when $K = 10$ and $N = 6$.

Message 175 – IMC Scale Factor Calibration Schedule Request

GIMTACS/GTACS sends OATS Message 175 unsolicited to request calculation of an IMC scale factor schedule of commanded scale factor offsets. OATS responds by transmitting a Message 75 to GIMTACS/GTACS containing the schedule. The Message 175 data block layout and field definitions follow.

```
HEADER BLOCK FIELDS:
      MESSAGE SEQUENCE NO.          = 1-65535
      SATELLITE ID                  = 8,9,10,11,12,13,14,15 (I-P)
      SOURCE                        = 10 (GIMTACS)
                                    = 90-101 (GTACS)
      DESTINATION                   = 41,42,43,44,45,46,47,48,49,50 (I-M OATS)
                                    = 75 - 85 (N-P Primary OATS)
      NO. OF HALF-WORDS             = 6
      MESSAGE TYPE                  = 175
      MESSAGE SUBTYPE               = 1 - IMAGER
                                    = 2 - SOUNDER
      TRACER                        = BLANKS
      MESSAGE COUNT                 = 1
      END OF MESSAGE                = TRUE
      ROUTING ID                    = UNIQUE ID SUPPLIED BY GIMTACS/GTACS

DATA BLOCK LAYOUT:
 HALF-
 WORD NO. MSB                                          LSB
           0  1  2  3  4  5  6  7  8  9 10 11 12 13 14 15
          |-----------------------------------------------|
      1   |                     YEAR                      |
          |-----------------------------------------------|
      2   |         DAY OF YEAR            |  HR (10s)   |
          |-----------------------------------------------|
      3   |  HR (1s)  |        MINUTES      |  SEC (10s)  |
          |-----------------------------------------------|
      4   |  SEC (1s) |               MSECS               |
          |-----------------------------------------------|
      5   |                   DURATION                    |
      6   |-----------------------------------------------|
```

DATA ITEM	FORMAT	VALIDATION	UNITS
SPAN START TIME YEAR	BCD	1989-2025	YEAR
DAY OF YEAR	BCD	1-366	DAY
HOUR	BCD	0-23	HOURS
MINUTES	BCD	0-59	MIN
SECONDS	BCD	0-59	SEC
MSEC	BCD	0-999	MSEC
DURATION	R*4	1-180	MIN

Notes:

Start time and duration define the time span over which the IMC scale factor offset and star sightings will be commanded.

Message 176 – DIRA Calibration Data Response (GOES I-M)

GIMTACS provides OATS with DIRA telemetry data in response to a Message 66. The Message 66 may contain more than one PID, grouped by multiple requested response subtypes. GIMTACS responds with a separate Message 166 for each PID, reflecting the requested subtype. When GIMTACS finishes responding with all PIDs and all subtypes, it sends a DIRA data completion Message 176 to OATS. Message 176 data block layouts and field definitions follow.

```
HEADER BLOCK FIELDS:
      MESSAGE SEQUENCE NO.          = 1-65535
      SATELLITE ID                  = 8,9,10,11,12 (I-M)
      SOURCE                        = 10 (GIMTACS)
      DESTINATION                   = 41,42,43,44,45,46,47,48,49,50 (OATS)
      NO. OF HALF-WORDS             = 2
      MESSAGE TYPE                  = 176
      MESSAGE SUBTYPE               = 0 - SUCCESSFUL COMPLETION
                                    = 1 - DATA DROPOUTS
                                    = 2 - PREMATURE COMPLETION
                                    = 3 - UNABLE TO FULFILL REQUEST
                                    = 4 - REQUEST PARTIALLY FULFILLED
      TRACER                        = AS PROVIDED IN MSG 66
      MESSAGE COUNT                 = 1
      END OF MESSAGE                = TRUE
      ROUTING ID                    = N/A

DATA BLOCK LAYOUT:
   HALF-
   WORD NO. MSB                                          LSB
             0  1  2  3  4  5  6  7  8  9 10 11 12 13 14 15
           |-----------------------------------------------|
         1 |      TOTAL NUMBER OF MESSAGES SENT            |
         2 |   IN RESPONSE TO THE REQUEST (TYPE 66)        |
           |-----------------------------------------------|
```

DATA ITEM	FORMAT	VALIDATION	UNITS
NUMBER OF MESSAGES SENT	I*4	1-65535	N/A

Notes:

1. The subtypes and their definitions are as follows:

   0 Successful completion - successful completion of the telemetry data for the period of time requested.

   1 Data dropouts - minor frame dropouts detected in thruster firing data.

   2 Premature completion - telemetry data exists only for part of the requested time span.

   3 Unable to fulfill request - no telemetry data exists for the requested time span.

   4 Request partially fulfilled - data for a specific PID or PIDs does not exist in the requested time span.

2. The tracer field should be returned exactly as found in the corresponding Message 66.

3. Message 176 is sent once after all the PIDs and their possible continuations for all the response subtypes specified in the Message 66 have been sent. The total number of messages sent is for all PIDs and all subtypes requested.

4. The subtype priorities are three, four, two, one, and zero. Only one completion message is sent for a given request.

Message 177 – Trim Tab Data Response (GOES I-M) (1 of 2)

GIMTACS sends OATS trim tab telemetry data in response to a Message 67, Subtype 1, and thruster firing history data in response to a Message 67, Subtype 2. Each of the subtypes is treated by GIMTACS as an entirely separate request with its own response and completion messages.

The trim tab telemetry data request message may contain more than one PID, grouped by multiple requested response subtypes. GIMTACS responds with a separate Message 167 for each PID, reflecting the requested subtype. When GIMTACS is finished responding to the request (all PIDS and all telemetry subtypes), it sends OATS a Message 177.

The thruster firing history data request message is for a single time span. GIMTACS responds with a separate Message 167, Subtype 2 for the thruster firing data. The response may span several messages. When GIMTACS is finished responding to the request, it sends OATS a Message 177.

The Message 177 data block layouts and field definitions follow.

```
HEADER BLOCK FIELDS:
      MESSAGE SEQUENCE NO.          = 1-65535
      SATELLITE ID                  = 8,9,10,11,12 (I-M)
      SOURCE                        = 10 (GIMTACS)
      DESTINATION                   = 41,42,43,44,45,46,47,48,49,50 (OATS)
      NO. OF HALF-WORDS             = 4
      MESSAGE TYPE                  = 177
      MESSAGE SUBTYPE               = 0 - SUCCESSFUL COMPLETION
                                    = 1 - DATA DROPOUTS
                                    = 2 - PREMATURE COMPLETION
                                    = 3 - UNABLE TO FULFILL REQUEST
                                    = 4 - REQUEST PARTIALLY FULFILLED
      TRACER                        = AS PROVIDED IN MSG 67
      MESSAGE COUNT                 = 1
      END OF MESSAGE                = TRUE
      ROUTING ID                    = N/A

DATA BLOCK LAYOUT:
   HALF-
   WORD NO. MSB                                          LSB
             0  1  2  3  4  5  6  7  8  9 10 11 12 13 14 15
           |-----------------------------------------------|
         1 |        TOTAL NUMBER OF MESSAGES SENT          |
         2 |     IN RESPONSE TO THE REQUEST (TYPE 67)      |
           |-----------------------------------------------|
         3 |           PERCENT OF TOTAL TELEMETRY          |
         4 |                FRAMES DROPPED                 |
           |-----------------------------------------------|
```

DATA ITEM	FORMAT	VALIDATION	UNITS
NUMBER OF MESSAGES SENT	I*4	1-65535	N/A
PERCENT OF TOTAL TELEMETRY FRAMES DROPPED	I*4	0-100	PERCENT

Message 177 – Trim Tab Data Response (GOES I-M) (2 of 2)

Notes:

1. The subtypes and their definitions are as follows:

   0 Successful completion - Successful completion of the telemetry data for the period of time requested.

   1 Data dropouts - Minor frame dropouts detected in thruster firing data.

   2 Premature completion - Telemetry data exists only for part of the requested time span.

   3 Unable to fulfill request - No telemetry data exists for the requested time span.

   4 Request partially fulfilled - Data for a specific PID or PIDs does not exist in the requested time span.

2. The tracer field should be returned exactly as found in the corresponding Message 67.

3. Message 177 is sent once after a trim tab telemetry data request, Message 67-1; and, when all the PIDs and their possible continuations for all the response subtypes specified in the request message have been sent. The total number of messages sent is for all PIDs and all subtypes requested.

4. Additionally, this message is sent once after a thruster firing history data request Message 67-2, when all the continuations have been sent.

5. The subtype priorities are three, four, two, one, and zero. Only one completion message is sent for a given request.

Message 180 – Propulsion Subsystem Data Response (1 of 2)

For GOES I-M, GIMTACS sends OATS propulsion subsystem telemetry data in response to a Message 70-1 and thruster firing history data in response to a Message 70-2. Each subtype is treated by GIMTACS as an entirely separate request with its own response and completion messages.

The Message 70-1 may contain more than one PID grouped by multiple requested response subtypes. However, GIMTACS responds with a separate Message 170 for each PID. Each Message 170 reflects the requested subtype. When GIMTACS is finished responding to the request (all PIDs and all telemetry subtypes), it sends OATS a Message 180.

The thruster firing history data request message is for a single time span. GIMTACS responds with a separate Message 170-2 for the thruster firing data. The response may span several messages. When GIMTACS is finished responding to the request, it sends OATS a Message 180.

For GOES N-P, GTACS sends OATS propulsion subsystem or thruster firing history telemetry data in response to a Message 70-1. The Message 70-1 may contain more than one LRV grouped by multiple requested response subtypes. However, GTACS responds with a separate Message 170 for each LRV. Each Message 170 reflects the requested subtype. When GTACS is finished responding to the request (all LRVs and all telemetry subtypes), it sends OATS a Message 180.
The Message 180 data block layout and field definitions are as follows:

```
HEADER BLOCK FIELDS:
      MESSAGE SEQUENCE NO.          = 1-65535
      SATELLITE ID                  = 8,9,10,11,12,13,14,15 (I-P)
      SOURCE                        = 10 (GIMTACS)
                                    = 90-101 (GTACS)
      DESTINATION                   = 41,42,43,44,45,46,47,48,49,50 (I-M OATS)
                                    = 75-85 (N-P OATS)
      NO. OF HALF-WORDS             = 4
      MESSAGE TYPE                  = 180
      MESSAGE TYPE                  = 0 - SUCCESSFUL COMPLETION
                                    = 1 - DATA DROPOUTS
                                    = 2 - PREMATURE COMPLETION
                                    = 3 - UNABLE TO FULFILL REQUEST
                                    = 4 - REQUEST PARTIALLY FULFILLED
      TRACER                        = AS PROVIDED IN MSG 70
      MESSAGE COUNT                 = 1
      END OF MESSAGE                = TRUE
      ROUTING ID                    = N/A

DATA BLOCK LAYOUT:
 HALF-
 WORD NO. MSB                                          LSB
          0  1  2  3  4  5  6  7  8  9 10 11 12 13 14 15
        |-----------------------------------------------|
      1 |            NUMBER OF MESSAGES SENT            |
      2 |   IN RESPONSE TO THE REQUEST (TYPE 70)        |
        |-----------------------------------------------|
      3 |   PERCENT OF TOTAL TELEMETRY FRAMES DROPPED   |
      4 |       or TELEMETRY FRAMES SUBMITTED           |
        |-----------------------------------------------|
```

Message 180 – Propulsion Subsystem Data Response (2 of 2)

DATA ITEM	FORMAT	VALIDATION	UNITS
NUMBER OF MESSAGES SENT	I*4	1-65535	N/A
PERCENT OF TOTAL TELEMETRY FRAMES DROPPED	I*4	0-100 (I-M)	PERCENT
TELEMETRY FRAMES SUBMITTED	I*4	0 = NO TELEMETRY 100 = TELEMETRY	(N-P) (N-P)

Notes:

1. The subtypes and their definitions are as follows:

   0 Successful completion – successful completion of the telemetry data for the period of time requested.

   1 Data dropouts – minor frame dropouts detected in thruster firing data.

   2 Premature completion – telemetry data exists only for part of the requested time span.

   3 Unable to fulfill request – no telemetry data exists for the requested time span.

   4 Request partially fulfilled – data for a specific PID/LRV or PIDs/LRVs does not exist in the requested time span.

2. The tracer field should be returned exactly as found in the corresponding Message 70.

3. Message 180 is sent once in response to a Message 70-1, when all the PIDs/LRVs and their possible continuations for all the response subtypes specified in the request message have been sent. The total number of messages sent is for all PIDs/LRVs and all subtypes requested.

4. Additionally, for GOES I-M, this message is sent once after a thruster firing history data request Message 70-2, when all the continuation messages have been sent.

5. The subtype priorities are three, four, two, one and zero. Only one completion message is sent for a given request.

6. For GOES N-P, the telemetry frames submitted data item contains zero when no telemetry has been transferred to OATS and 100 when telemetry has been transferred.

Messages 185 & 195 – MMC Calibration Data Response (GOES I-M)

GIMTACS uses Message 185 to send OATS MMC calibration telemetry data in response to a Message 85. The Message 85 may contain more than one PID, grouped by multiple requested response subtypes. GIMTACS sends a separate Message 185 for each PID. Each response message reflects the requested subtype. When GIMTACS has sent all the required Message 185s, all PIDs, and subtypes, it sends OATS an MMC calibration data completion Message 195. The Message 185 data block layout and field definitions follow.

Message 185 – MMC Calibration Data Response (GOES I-M) (1 of 2)

```
HEADER BLOCK FIELDS:
      MESSAGE SEQUENCE NO.          = 1-65535
      SATELLITE ID                  = 8,9,10,11,12 (I-M)
      SOURCE                        = 10 (GIMTACS)
      DESTINATION                   = 41,42,43,44,45,46,47,48,49,50 (OATS)
      NO. OF HALF-WORDS             = UP TO 1608 (SEE NOTES)
      MESSAGE TYPE                  = 185
      MESSAGE SUBTYPE               = 6 - WHEEL SPEEDS DATA
                                    = 7 - ACCUMULATED DIRA PITCH, ROLL & YAW
      TRACER                        = AS PROVIDED IN MSG 85
      MESSAGE COUNT                 = 1
      END OF MESSAGE                = TRUE
      ROUTING ID                    = N/A

DATA BLOCK LAYOUT:
    HALF-
    WORD NO. MSB                                          LSB
             0  1  2  3  4  5  6  7  8  9 10 11 12 13 14 15
            |-----------------------------------------------|_
         1  |                     YEAR                      | |
            |-----------------------------------------------| |TIME OF
         2  |  |         DAY OF YEAR            |  HR (10s) | |FIRST
            |-----------------------------------------------| |DATA
         3  |  HR (1s)  |        MINUTES        |  SEC (10s) | |POINT
            |-----------------------------------------------| |IN THIS
         4  |  SEC (1s) |              MSECS                | |MESSAGE
            |-----------------------------------------------|_
         5  |   TELEMETRY PARAMETER IDENTIFICATION (PID)    |
         6  |
            |-----------------------------------------------|
         7  |     NUMBER OF DATA POINTS IN MESSAGE (N)      |
            |-----------------------------------------------|
         8  |     MESSAGE SEQUENCE NUMBER FOR THIS PID      |
            |-----------------------------------------------|
         9  |     FIRST DATA VALUE (IN ENGINEERING UNITS)   |
        10  |
            |-----------------------------------------------|
        11  |    TIME INCREMENT FROM PREVIOUS DATA POINT    |
        12  |
            |-----------------------------------------------|
        13  |    SECOND DATA VALUE (IN ENGINEERING UNITS)   |
        14  |
            |-----------------------------------------------|
        15  |  TIME OFFSETS AND DATA VALUES IN ENGINEERING  |
         .  |          UNITS FOR DATA POINTS 3-N            |
      4N+6  |-----------------------------------------------|
```

Message 185 – MMC Calibration Data Response (2 of 2)

DATA ITEM	FORMAT	VALIDATION	UNITS
TIME OF DATA POINT YEAR	BCD	1989-2025	YEAR
DAY OF YEAR	BCD	1-366	DAY
HOUR	BCD	0-23	HOURS
MINUTES	BCD	0-59	MIN
SECONDS	BCD	0-59	SEC
MSEC	BCD	0-999	MSEC
TLM PARAMETER ID (PID)	I*4	1-9999	N/A
NUMBER OF DATA POINTS	I*2	0-400	N/A
MSG SEQ NO. FOR THIS PID	I*2	1-40	N/A
ENGINEERING VALUES OF DATA	R*4	VARIOUS	VARIOUS
TIME INCREMENT	R*4	0.512-300.0	SEC

Notes:

1. The tracer field should be returned exactly as found in the corresponding Message 85.
2. Request messages generally contain a number of PIDs, resulting in a separate response message for each PID.
3. See the Message 85 notes for a description of the telemetry parameters identified by the PIDs.
4. When all messages for all PIDs have been sent, completion is indicated by the MMC calibration data completion Message 195.
5. The message length is given by $4N + 8$, where N is the number of data points in the message. It has a maximum length of 1608 16-bit half- words when $N = 400$.
6. When the number of data points equals zero, the message ends at half-word 8. The message is always sent, even if there are no data points.

Messages 187 & 197 – SMC Data Response and Completion (GOES I-M)

GIMTACS uses Message 187 to send OATS SMC telemetry data in response to a Message 87. The Message 87 may contain more than one PID, grouped by multiple requested response subtypes. GIMTACS sends a separate Message 187 for each PID. Each response message reflects the requested subtype. Upon completion of the response, all PIDs, and all subtypes, GIMTACS sends OATS an SMC data completion Message 197. The Message 187 data block layout and field definitions follow.

Message 187 – SMC Data Response (GOES I-M) (1 of 2)

```
HEADER BLOCK FIELDS:
      MESSAGE SEQUENCE NO.          = 1-65535
      SATELLITE ID                  = 8,9,10,11,12 (I-M)
      SOURCE                        = 10 (GIMTACS)
      DESTINATION                   = 41,42,43,44,45,46,47,48,49,50 (OATS)
      NO. OF HALF-WORDS             = UP TO 160 (SEE NOTES)
      MESSAGE TYPE                  = 187
      MESSAGE SUBTYPE               = 10 - SMC DATA
      TRACER                        = AS PROVIDED IN MSG 87
      MESSAGE COUNT                 = 1
      END OF MESSAGE                = TRUE
      ROUTING ID                    = N/A

DATA BLOCK LAYOUT:
 HALF-
 WORD NO. MSB                                          LSB
          0  1  2  3  4  5  6  7  8  9 10 11 12 13 14 15
         |-----------------------------------------------|
   1-32  |       LOCATION OF RETURNED DATA FILES         |
         |-----------------------------------------------|
  33-34  |          NUMBER OF DATA FILES (N)             |
         |-----------------------------------------------|
  35-36  |            PID OF 1ST DATA FILE               |
         |-----------------------------------------------|
  37-52  |          DATA FILE NAME FOR PID 1             |
         |                                               |
         |-----------------------------------------------|
    53   |      PID AND DATA FILE NAME FOR PIDS 2-N      |
     .   |                                               |
 34+18N  |                                               |
         |-----------------------------------------------|
```

DATA ITEM	FORMAT	VALIDATION	UNITS
LOCATION OF RETURNED DATA FILES	ASCII	NONE	N/A
NUMBER OF DATA FILES	I*4	7	N/A
PID OF 1ST DATA FILE	I*4	1-9999	N/A
DATA FILE NAME FOR PID 1	ASCII	NONE	N/A
PID AND DATA FILE NAME FOR PIDS 2-N	ASCII	NONE	N/A

Message 187 – SMC Data Response (GOES I-M) (2 of 2)

Notes:

1. The tracer field should be returned exactly as found in the corresponding Message 87.
2. See the Message 87 notes for a description of the telemetry parameters identified by the PIDs.
3. The location of the returned data files includes node as well as directory information.
4. When messages for all the PIDs have been sent, completion is indicated by an SMC data completion Message 197.
5. The message length is given by 34 + 18*N*, where N is the number of PIDs. It has a maximum length of 160 16-bit half-words when *N* = 7.

Messages 188 & 198 – Thermal Snap Data Response and Completion (GOES I-M)

GIMTACS uses Message 188 to send OATS thermal snap telemetry data in response to a Message 88. The Message 88 may contain more than one PID, grouped by multiple requested response subtypes. When GIMTACS has fulfilled the request, all PIDs, and all subtypes, it sends OATS a thermal snap data completion Message 198. The Message 188 and 198 data block layout and field definitions follow.

Message 188 – Thermal Snap Data Response (GOES I-M) (1 of 2)

```
HEADER BLOCK FIELDS:
      MESSAGE SEQUENCE NO.          = 1-65535
      SATELLITE ID                  = 8,9,10,11,12 (I-M)
      SOURCE                        = 10 (GIMTACS)
      DESTINATION                   = 41,42,43,44,45,46,47,48,49,50 (OATS)
      NO. OF HALF-WORDS             = 88 (SEE NOTES)
      MESSAGE TYPE                  = 188
      MESSAGE SUBTYPE               = 11 - THERMAL DATA
      TRACER                        = AS PROVIDED IN MSG 88
      MESSAGE COUNT                 = 1
      END OF MESSAGE                = TRUE
      ROUTING ID                    = N/A
```

```
DATA BLOCK LAYOUT:
 HALF-
 WORD NO. MSB                                          LSB
          0  1  2  3  4  5  6  7  8  9 10 11 12 13 14 15
         |-----------------------------------------------|
   1-32  |       LOCATION OF RETURNED DATA FILES         |
         |-----------------------------------------------|
  33-34  |          NUMBER OF DATA FILES (N)             |
         |-----------------------------------------------|
  35-36  |            PID OF 1ST DATA FILE               |
         |-----------------------------------------------|
  37-52  |          DATA FILE NAME FOR PID 1             |
         |                                               |
         |-----------------------------------------------|
    53   |       PID & DATA FILE NAME FOR PIDS 2-N       |
     .   |                                               |
 34+18N  |                                               |
         |-----------------------------------------------|
```

DATA ITEM	FORMAT	VALIDATION	UNITS
LOCATION OF RETURNED DATA FILES	ASCII	NONE	N/A
NUMBER OF DATA FILES	I*4	3	N/A
PID OF 1ST DATA FILE	I*4	1-9999	N/A
DATA FILE NAME FOR PID 1	ASCII	NONE	N/A
PID & DATA FILE NAME FOR PIDS 2-N	ASCII	NONE	N/A

Message 188 – Thermal Snap Data Response (GOES I-M) (2 of 2)

Notes:

1. The tracer field should be returned exactly as found in the corresponding Message 88.
2. See Message 88 notes for a description of the telemetry parameters identified by the PIDs.
3. The location of the returned data files includes node and directory information.
4. When all messages for all PIDs have been sent, completion is indicated by a thermal snap data completion Message 198.
5. The message length is given by 34 + 18*N*, where N is the number of PIDs. It has a maximum length of 88 16-bit half-words when *N* = 3.

Message 190 – Spacecraft Equipment Status (GOES I-M) (1 of 2)

GIMTACS sends OATS an unsolicited Message 190 whenever there is a change in status in any of a specified set of spacecraft equipment. OATS needs the status of various spacecraft equipment primarily, but not exclusively, for its magnetic dipole calculation. The Message 190 data block layout and field definitions follow.

```
HEADER BLOCK FIELDS:
      MESSAGE SEQUENCE NO.          = 1-65535
      SATELLITE ID                  = 8,9,10,11,12 (I-M)
      SOURCE                        = 10 (GIMTACS)
      DESTINATION                   = 32 (ALL OATS)
      NO. OF HALF-WORDS             = 84
      MESSAGE TYPE                  = 190
      MESSAGE SUBTYPE               = 0
      TRACER                        = BLANKS
      MESSAGE COUNT                 = 1
      END OF MESSAGE                = TRUE
      ROUTING ID                    = N/A
```

```
DATA BLOCK LAYOUT: N/A
 HALF-
 WORD NO. MSB                                          LSB
           0  1  2  3  4  5  6  7  8  9 10 11 12 13 14 15
         |-----------------------------------------------|—
      1  |                     YEAR                      |  |
         |-----------------------------------------------|  |  TIME OF
      2  |  |         DAY OF YEAR            |  HR (10s)|  |  EQUIPMENT
         |-----------------------------------------------|  |  STATUS
      3  |  HR (1s)  |        MINUTES         |  SEC (10s)|  |  CHANGE
         |-----------------------------------------------|  |
      4  |  SEC (1s) |               MSECS               |  |
         |-----------------------------------------------|—
   4N+1  |                 EQUIPMENT PID                 |
       .|       FOR ITEM N, WHERE N = 1,2,3,...,20       |
   4N+2  |                                               |
         |-----------------------------------------------|
   4N+3  |        EQUIPMENT STATUS (RAW TLM VALUE)       |
       .|       FOR ITEM N, WHERE N = 1,2,3,...,20       |
   4N+4  |                                               |
         |-----------------------------------------------|
```

DATA ITEM	FORMAT	VALIDATION	UNITS
TIME OF EQUIP STATUS CHANGE	BCD	1989-2025	YEAR
DAY OF YEAR	BCD	1-366	DAY
HOUR	BCD	0-23	HOURS
MINUTES	BCD	0-59	MIN
SECONDS	BCD	0-59	SEC
MSEC	BCD	0-999	MSEC
EQUIPMENT PID	I*4	1-9999	N/A
EQUIPMENT STATUS	I*4	0 OR 1	N/A

Message 190 – Spacecraft Equipment Status (GOES I-M) (2 of 2)

Notes:

1. GIMTACS sends an unsolicited Message 190 to OATS within 5 minutes of any commanded status change to any of the following spacecraft equipment:

Item	Equipment
1	Magnetometer No. 1
2	Magnetometer No. 2
3	Momentum wheel No. 1
4	Momentum wheel No. 2
5	Reaction wheel
6	Sounder electronics
7	Sounder instrument
8	Imager electronics
9	Imager instrument
10	Magnetic torquer No. 1, relay No. 1
11	Magnetic torquer No. 1, relay No. 2
12	Magnetic torquer No. 2, relay No. 1
13	Magnetic torquer No. 2, relay No. 2
14	ES 1
15	ES 2
16-20	Spares - not used

2. The message always contains the entire 20-item table. Since equipment PIDs may differ from spacecraft to spacecraft, the PIDs are stored as database items for each satellite. Also, since the equipment “on” and “off” status designation varies from one equipment to another, the statuses are maintained as database items.

Message 195 – MMC Calibration Data Completion (GOES I-M)

GIMTACS uses Message 185 to send OATS MMC calibration telemetry data in response to a Message 85. The Message 85 may contain more than one PID, grouped by multiple requested response subtypes. GIMTACS sends a separate Message 185 for each PID. Each response message reflects the requested subtype. When GIMTACS has sent all the required Message 185s, all PIDs, and subtypes, it sends OATS an MMC calibration data completion Message 195. The Message 195 data block layout and field definitions follow.

```
HEADER BLOCK FIELDS:
      MESSAGE SEQUENCE NO.          = 1-65535
      SATELLITE ID                  = 8,9,10,11,12 (I-M)
      SOURCE                        = 10 (GIMTACS)
      DESTINATION                   = 41,42,43,44,45,46,47,48,49,50 (OATS)
      NO. OF HALF-WORDS             = 2
      MESSAGE TYPE                  = 195
      MESSAGE SUBTYPE               = 0 - SUCCESSFUL COMPLETION
                                    = 1 - DATA DROPOUTS
                                    = 2 - PREMATURE COMPLETION
                                    = 3 - UNABLE TO FULFILL REQUEST
                                    = 4 - REQUEST PARTIALLY FULFILLED
      TRACER                        = AS PROVIDED IN MSG 85
      MESSAGE COUNT                 = 1
      END OF MESSAGE                = TRUE
      ROUTING ID                    = N/A

DATA BLOCK LAYOUT:
   HALF-
   WORD NO. MSB                                          LSB
             0  1  2  3  4  5  6  7  8  9 10 11 12 13 14 15
           |-----------------------------------------------|
         1 |      TOTAL NUMBER OF MESSAGES SENT            |
         2 |      IN RESPONSE TO THE MESSAGE 85            |
           |-----------------------------------------------|
```

DATA ITEM	FORMAT	VALIDATION	UNITS
NUMBER OF MESSAGES SENT	I*4	1-65535	N/A

Notes:

1. The following are subtypes and their definitions:
   - 0 Successful completion - successful completion of the telemetry data for the period of time requested.
   - 1 Data dropouts - minor frame dropouts detected in thruster firing data.
   - 2 Premature completion - telemetry data exists only for part of the requested time span.
   - 3 Unable to fulfill request - no telemetry data exists for the requested time span.
   - 4 Request partially fulfilled - data for a specific PID or PIDs does not exist in the requested time span.
2. The tracer field should be returned exactly as found in the corresponding Message 85.
3. Message 195 is sent once after all the PIDs and their possible continuations for all the response subtypes specified in the Message 85 have been sent. The total number of messages sent depends on the number of PIDs and subtypes requested.
4. The subtype priorities are three, four, two, one, and zero. Only one completion message is sent for a given request.

Message 197 – SMC Data Completion (GOES I-M)

GIMTACS uses Message 187 to send OATS SMC telemetry data in response to a Message 87. The Message 87 may contain more than one PID, grouped by multiple requested response subtypes. GIMTACS sends a separate Message 187 for each PID. Each response message reflects the requested subtype. Upon completion of the response, all PIDs, and all subtypes, GIMTACS sends OATS an SMC data completion Message 197. The Message 197 data block layout and field definitions follow.

```
HEADER BLOCK FIELDS:
      MESSAGE SEQUENCE NO.          = 1-65535
      SATELLITE ID                  = 8,9,10,11,12 (I-M)
      SOURCE                        = 10 (GIMTACS)
      DESTINATION                   = 41,42,43,44,45,46,47,48,49,50 (OATS)
      NO. OF HALF-WORDS             = 2
      MESSAGE TYPE                  = 197
      MESSAGE SUBTYPE               = 0 - SUCCESSFUL COMPLETION
                                    = 1 - DATA DROPOUTS
                                    = 2 - PREMATURE COMPLETION
                                    = 3 - UNABLE TO FULFILL REQUEST
                                    = 4 - REQUEST PARTIALLY FULFILLED
      TRACER                        = AS PROVIDED IN MSG 87
      MESSAGE COUNT                 = 1
      END OF MESSAGE                = TRUE
      ROUTING ID                    = N/A

DATA BLOCK LAYOUT:
 HALF-
 WORD NO. MSB                                          LSB
          0  1  2  3  4  5  6  7  8  9 10 11 12 13 14 15
        |-----------------------------------------------|
      1 |        TOTAL NUMBER OF MESSAGES SENT          |
      2 |          IN RESPONSE TO MESSAGE 87            |
        |-----------------------------------------------|
```

DATA ITEM	FORMAT	VALIDATION	UNITS
NUMBER OF MESSAGES SENT	I*4	1	N/A

Notes:

1. The following are subtypes and their definitions:
   - 0 Successful completion - successful completion of the telemetry data for the period of time requested.
   - 1 Data dropouts - minor frame dropouts detected in thruster firing data.
   - 2 Premature completion - telemetry data exists only for part of the requested time span.
   - 3 Unable to fulfill request - no telemetry data exists for the requested time span.
   - 4 Request partially fulfilled - data for a specific PID or PIDs does not exist in the requested time span.
2. The tracer field should be returned exactly as found in the corresponding Message 87.
3. The subtype priorities are three, four, two, one, and zero. Only one completion message is sent for a given request.
4. Message 197 is sent once after the last Message 187 is sent.

Message 198 – Thermal Snap Data Completion (GOES I-M)

GIMTACS uses Message 188 to send OATS thermal snap telemetry data in response to a Message 88. The Message 88 may contain more than one PID, grouped by multiple requested response subtypes. When GIMTACS has fulfilled the request, all PIDs, and all subtypes, it sends OATS a thermal snap data completion Message 198. The Message 198 data block layout and field definitions follow.

```
HEADER BLOCK FIELDS:
      MESSAGE SEQUENCE NO.          = 1-65535
      SATELLITE ID                  = 8,9,10,11,12 (I-M)
      SOURCE                        = 10 (GIMTACS)
      DESTINATION                   = 41,42,43,44,45,46,47,48,49,50 (OATS)
      NO. OF HALF-WORDS             = 2
      MESSAGE TYPE                  = 198
      MESSAGE SUBTYPE               = 0 - DATA DROPOUTS
                                    = 2 - PREMATURE COMPLETION
                                    = 3 - UNABLE TO FULFILL REQUEST
                                    = 4 - REQUEST PARTIALLY FULFILLED
      TRACER                        = AS PROVIDED IN MSG 88
      MESSAGE COUNT                 = 1
      END OF MESSAGE                = TRUE
      ROUTING ID                    = N/A

DATA BLOCK LAYOUT:
 HALF-
 WORD NO. MSB                                          LSB
          0  1  2  3  4  5  6  7  8  9 10 11 12 13 14 15
        |-----------------------------------------------|
      1 |      TOTAL NUMBER OF MESSAGES SENT            |
      2 |      IN RESPONSE TO THE MESSAGE 88            |
        |-----------------------------------------------|
```

DATA ITEM	FORMAT	VALIDATION	UNITS
NUMBER OF MESSAGES SENT	I*4	1	N/A

Notes:

1. The subtypes and their definitions are:
   - 0 Successful completion - successful completion of the telemetry data for the period of time requested.
   - 1 Data dropouts - minor frame dropouts detected in thruster firing data.
   - 2 Premature completion - telemetry data exists only for part of the requested time span.
   - 3 Unable to fulfill request - no telemetry data exists for the requested time span.
   - 4 Request partially fulfilled - data for a specific PID or PIDs does not exist in the requested time span.
2. The tracer field should be returned exactly as found in the corresponding data request Message 88.
3. The subtype priorities are three, four, two, one, and zero. Only one completion message is sent for a given request.
4. One Message 198 is sent after the last Message 188 is sent.

Message 199 – GTACS-OATS Text Message (GOES N-P)

GTACS uses Message 199 to send text messages to the OATS concerning command planning, contingency operations and configuration. Text messages can contain up to 65 ASCII characters. The Message 199 data block layout and field definitions are as follows:

```
HEADER BLOCK FIELDS:
      MESSAGE SEQUENCE NO.          = 1-65535
      SATELLITE ID                  = 13,14,15 (N-P)
      SOURCE                        = 90 - 101 (GTACS)
      DESTINATION                   = 75 - 85 (OATS)
      NO. OF HALF-WORDS             = 40
      MESSAGE TYPE                  = 199
      MESSAGE SUBTYPE               = 0
      TRACER                        = ASCII BLANKS
      MESSAGE COUNT                 = 1
      END OF MESSAGE                = 255
      ROUTING ID                    = N/A

DATA BLOCK LAYOUT:
     HALF-     MSB                                                LSB
     WORD NO.  0  1  2  3  4  5  6  7  8  9  10 11 12 13 14 15
        1
        :                          TEXT MESSAGE
       40
```

DATA ITEM	FORMAT	VALIDATION	UNITS
TEXT MESSAGE	ASCII	N/A	N/A

Notes:

Eight-bit ASCII character pairs are formatted into half-words by placing the first character in the most significant byte (bits 0–7) and the second character in the least significant byte (bits 8–15).

Message 202 – Labeled Star Measurement (1 of 3)

Star sense sequences occur an average of once every 30 minutes on both the Imager and Sounder, in groups of three or more. The SPS extracts star sense data from the Imager and Sounder data streams, threshold-detects the data, and determines the time of occurrence of the center of peak amplitude. The SPS sends GIMTACS/GTACS a Message 2 containing instrument coordinates, duration, and detectors 1 through 8 thresholds, mean values, and number of events. Message 2 also contains four event records per detector. Each event record contains the event mean value, event duration, and the center time of the event. Star sense measurements are a consequence of command specifications contained in a Message 51 for normal star sightings or a Message 75 for IMC calibration star sightings. After each star sequence, GIMTACS/GTACS concatenates starlook identification information from the corresponding OATS Message 51 or 75 with the Message 2 star sense data from the SPS to create a Message 202 to OATS. The Message 202 data block layout and field definitions follow.

```
HEADER BLOCK FIELDS:
      MESSAGE SEQUENCE NO.          = 1-65535
      SATELLITE ID                  = 8,9,10,11,12,13,14,15 (I-P)
      SOURCE                        = 10 (GIMTACS)
                                    = 90-101 (GTACS)
      DESTINATION                   = 32 (ALL OATS)
      NO. OF HALF-WORDS             = 304
      MESSAGE TYPE                  = 202
      MESSAGE SUBTYPE               = 1 - IMAGER, NORMAL
                                    = 2 - SOUNDER, NORMAL
                                    = 3 - IMAGER, IMC CALIBRATION
                                    = 4 - SOUNDER, IMC CALIBRATION
      TRACER                        = ASCII BLANKS
      MESSAGE COUNT                 = 1
      END OF MESSAGE                = 255
      ROUTING ID                    = N/A

DATA BLOCK LAYOUT:
 HALF-
 WORD NO. MSB                                          LSB
          0  1  2  3  4  5  6  7  8  9 10 11 12 13 14 15
        |-----------------------------------------------|
      1 |                  STAR ID                      |
      2 |-----------------------------------------------|
      3 |            NO. OF LOOKS FOR STAR              |
      4 |-----------------------------------------------|
      5 |           LOOK NO. IN CMD SEQUENCE            |
      6 |-----------------------------------------------|
      7 |                  IMC OFFSET                   |
      8 |             (FOR SUBTYPES 3 AND 4)            |-
      9 |                    YEAR                       | |
        |-----------------------------------------------| |STAR
     10 | F|         DAY OF YEAR            |  HR (10s) | |SENSE
        |-----------------------------------------------| |START
     11 |  HR (1s)  |        MINUTES         |  SEC (10s)| |TIME
        |-----------------------------------------------| |
     12 |  SEC (1s) |               MSECS                | |
        |-----------------------------------------------|-
     13 |            STAR SENSE DURATION                |
     14 |-----------------------------------------------|
```

Message 202 – Labeled Star Measurement (2 of 3)

```
HALF-
WORD NO. MSB                                          LSB
         0  1  2  3  4  5  6  7  8  9 10 11 12 13 14 15
        |-----------------------------------------------|
    15  |       NO. RAW PIXELS PER INPUT SAMPLE         |
        |-----------------------------------------------|
    16  |     NO. INPUT SAMPLES PER AVERAGED SAMPLE     |
        |-----------------------------------------------|—
    17  |                  E-W CYCLES                   | |
        |-----------------------------------------------| |
    18  |                E-W INCREMENTS                 | | INSTR
        |-----------------------------------------------| | COORDS
    19  |                  N-S CYCLES                   | |
        |-----------------------------------------------| |
    20  |               N-S INCREMENTS                  | |
        |-----------------------------------------------|—
    21  |    WINDOW THRESHOLD LEVEL FOR DETECTORS 1-8   |
    28  |
        |-----------------------------------------------|
    29  |     DETECTOR MEAN VALUE FOR DETECTORS 1-8     |
    36  |
        |-----------------------------------------------|
    37  |         NO. OF EVENTS FOR DETECTORS 1-8       |
    44  |
        |-----------------------------------------------|
    45  |                  DATA LOSS                    |
        |-----------------------------------------------|
    46  |               YAW FLIP FLAG                   |
        |-----------------------------------------------|
    47  |                    SPARE                      |
    48  |
        |-----------------------------------------------|—
    49  |             EVENT MAXIMUM SIGNAL              | |EVENT
        |-----------------------------------------------| |RECORD 1
    50  |            EVENT E-W SERVO ERROR              | |
        |-----------------------------------------------| |
    51  |            EVENT N-S SERVO ERROR              | |
        |-----------------------------------------------| |
    52  |        FULL WIDTH HALF MAXIMUM (FWHM)         | |
        |-----------------------------------------------| |
    53  |         CENTER TIME OF EVENT:  YEAR           | |
        |-----------------------------------------------| |
    54  | F|             DAY OF YEAR        |   HR (10s) | |
        |-----------------------------------------------| |
    55  |  HR (1s)  |        MINUTES        |  SEC (10s) | |
        |-----------------------------------------------| |
    56  |  SEC (1s) |               MSECS                | |
        |-----------------------------------------------|—
    57  |       EVENT RECORDS 2-4 FOR DETECTOR 1        |
    80  |
        |-----------------------------------------------|
    81  |         EVENT RECORDS 1-4 FOR EACH OF         |
     .  |                 DETECTORS 2-8                 |
   304  |
        |-----------------------------------------------|
```

DATA ITEM	FORMAT	VALIDATION	UNITS
F (TIME CODE FLAG)	BINARY	0 - LOCK 1 - FLYWHEEL	N/A
STAR ID (YALE CAT BS NO.)	I*4	-1, 1-9999	N/A
NO. OF LOOKS FOR STAR	I*4	1-10	N/A
LOOK NUMBER IN CMD SEQUENCE	I*4	1-10	N/A
IMC OFFSET	R*4	-0.008 TO +0.008	RAD
YEAR	BCD	1989-2025	YEAR
DAY OF YEAR	BCD	1-366	DAY
HOUR	BCD	0-23	HOUR

Message 202 – Labeled Star Measurement (3 of 3)

DATA ITEM	FORMAT	VALIDATION	UNITS
MINUTES	BCD	0-59	MIN
SECONDS	BCD	0-59	SECS
MSECS	BCD	0-999	MSECS
STAR SENSE DURATION	BINARY	1000-1200293 (I-M)	MSECS
	BINARY	1000-64000 (N-P)	MSECS
RAW PIXELS/SAMPLE	BINARY	4-4096 (I-M)	N/A
	BINARY	1-65535 (N-P)	N/A
SAMPLE/AVG/SAMPLE	BINARY	1-16	N/A
	BINARY	1-65535 (N-P)	N/A
CYCLES	BINARY	0-128	CYCLES
INCREMENTS	BINARY	0-6135 (IMAGER)	INCREMENTS
		0-2804 (SOUNDER)	
WINDOW THRESHOLD LEVEL	BINARY	0-65535 (IMAGER)	2^{-8} COUNTS
		0-65535 (SOUNDER)	2^{-4} COUNTS
DETECTOR MEAN VALUE	BINARY	0-65535 (IMAGER)	2^{-8} COUNTS
		0-65535 (SOUNDER)	2^{-4} COUNTS
NO. OF EVENTS	BINARY	0-4	N/A
FWHM	BINARY	0-65535	MSECS
SERVO ERROR	BINARY	0-1023 (IMAGER)	COUNTS
		0-8191 (SOUNDER)	
DATA LOSS	BINARY	0 = NO LOSS DETECTED	N/A
		65,535 (ALL ONES) = LOSS DETECTED	N/A
YAW FLIP FLAG	BINARY	X`00 = NORMAL	N/A
		X`3F ' FLIPPED	N/A
EVENT MAXIMUM SIGNAL	BINARY	0-65535 (IMAGER)	2^{-6} COUNTS
		0-65535 (SOUNDER)	2^{-3} COUNTS

Notes:

1. Minimum star sense duration (refer to validation range) is equal to the minimum star sense duration that can be executed by the instruments (1 second for the Imager, 4 seconds for the Sounder). The maximum star sense duration assumes the maximum number of star sense blocks are summed (1024 blocks) and the SPS buffer allocated for the storage of these samples is filled (6400 samples).
2. Raw Imager pixels are averaged in SPS hardware before being passed to SPS software. The number of raw pixels included in each input sample is denoted by half-word 15.
3. SPS software subjects the input samples provided by the instruments to a moving window averaging filter. The number of input samples enclosed by the window is denoted by half-word 16. The averaged values produced by the windowing filter are the super pixels upon which the star detection algorithm operates.
4. For a given detector, records are time ordered from earliest CDAS receive time (record one), to latest CDAS time (record four). If no data is available for an event record, the record content is null (binary 0).
5. E-W and N-S servo error data are the values computed by interpolation of the raw values at the time of each star crossing event.
6. The yaw flip flag is set to 0 for a spacecraft in its normal upright orientation and -1 (hex 3F) when it is rotated 180 degrees about the yaw axis (yaw flipped).
7. The star ID is the Yale catalog BS number value (or OATS catalog number value), ranging from 1 to 9999. Star ID -1 refers to the Moon.
8. The IMC offset is valid only for IMC calibration star measurements, as in Messages 202-3 and 202-4.
9. Data loss indicates either an Imager or Sounder data block sync loss or parity errors have occurred when ingesting the star sense data, making the star sense measurement data validity suspect.

Message 205 – Single Chord Operations Notification (GOES I-M)

GIMTACS sends OATS a Message 205 to convey the precise time when a single chord operation was commanded on or off. OATS uses the single chord start and stop times to control certain aspects of the SSAA process. The Message 205 data block layout and field definitions follow.

```
HEADER BLOCK FIELDS:
      MESSAGE SEQUENCE NO.          = 1-65535
      SATELLITE ID                  = 8,9,10,11,12 (I-M)
      SOURCE                        = 10 (GIMTACS)
      DESTINATION                   = 32 (ALL OATS)
      NO. OF HALF-WORDS             = 4
      MESSAGE TYPE                  = 205
      MESSAGE SUBTYPE               = 1 - ON
                                    = 2 - OFF
      TRACER                        = ASCII BLANKS
      MESSAGE COUNT                 = 1
      END OF MESSAGE                = 255
      ROUTING ID                    = N/A

DATA BLOCK LAYOUT: N/A
 HALF-
 WORD NO. MSB                                          LSB
           0  1  2  3  4  5  6  7  8  9 10 11 12 13 14 15
          |-----------------------------------------------|
      1   |                     YEAR                      |
          |-----------------------------------------------|
      2   | F|         DAY OF YEAR            |  HR (10s) |
          |-----------------------------------------------|
      3   |  HR (1s)  |        MINUTES         |  SEC (10s)|
          |-----------------------------------------------|
      4   |  SEC (1s) |               MSECS               |
          |-----------------------------------------------|
```

DATA ITEM	FORMAT	VALIDATION	UNITS
SINGLE CHORD TIME YEAR	BCD	1989-2025	YEAR
DAY OF YEAR	BCD	1-366	DAY
HOUR	BCD	0-23	HOUR
MINUTE	BCD	0-59	MINUTE
SECOND	BCD	0-59	SEC
MSEC	BCD	0-999	MSEC

4.3.8 AGC-Originated Messages

AGC originated messages are listed below in the order in which their detailed descriptions are provided in this section. Message Type and Subtype appear in the lower right hand corner of these pages to assist in easy identification of the pages describing a specific message.

Type	Description	Destination
301	AGC Monitor Telemetry	GIMTACS

Message 301 – AGC Monitor Telemetry (GOES I-M)

The CDAS AGC Monitor sends GIMTACS unsolicited Message 301s. The messages contain a time stamp and the TACTS Id, the AGC receive signal strength sample value, and the Id of the antenna to which the TACTS is connected. The AGC Monitor encapsulates the Message 301s in UDP/IP packets for transmission to GIMTACS via a direct LAN connection. GOES controllers use the AGC information to predict telemetry link outages and restorals resulting from Telemetry and Command (T&C) antenna nulls during on-orbit storage, and the acquisitions of signal and losses of signal at launch support ground stations during launch and orbit raising activities. The AGC Monitor Message 301 data block layout and field definitions follow. This message has no header block.

```
HEADER BLOCK FIELDS:  N/A

DATA BLOCK LAYOUT:
HALF-
WORD NO. MSB                                                LSB
         0  1  2  3  4  5  6  7  8  9  10 11 12 13 14 15
        |-------------------------------------------------|
      1 |                   DAY OF YEAR                   |
        |-------------------------------------------------|
      2 |                   MSEC OF DAY                   |
      3 |                                                 |
        |-------------------------------------------------|
      4 |                   TACTS 1 ID                    |
        |-------------------------------------------------|
      5 |                 AGC DATA VALUE                  |
      6 |                                                 |
        |-------------------------------------------------|
      7 |               ANTENNA ID                       |
        |-------------------------------------------------|
   8-27 |              TACTS 2-6 ID                       |
        |             AGC DATA VALUES                     |
        |               ANTENNA ID                       |
        |-------------------------------------------------|
```

DATA ITEM	FORMAT	VALIDATION	UNITS
DAY OF YEAR	I*16	1-366	DAY
MSEC OF DAY	I*32	1-86400000	MSEC
TACTS ID NO.	I*16	1-6	N/A
AGC DATA VALUE	I*32	(SEE NOTES)	DB
ANTENNA ID	I*16	1-8	N/A

Notes:

1. AGC data values are multiplied by 1000, allowing the receive signal strength data to pass as binary integers instead of as real numbers. This avoids roundoff and precision issues.
2. The message length is 432 bits (27 half-words).
3. The Message 301 frequency is user selectable at AGC Monitor startup, with a default rate of one message per second.

Section 5.0 External Database, File Inputs, and Outputs

5.1 SPS

The SPS receives its external inputs from ASCII files.

5.1.1 SPS Calibration and Navigation Database Disk

Tables 5-1 through 5-4 list OGE calibration limits, conversion factors, and factory parameters for the Imager and Sounder. The tables also include the organizations responsible for producing this information. Calibration limits and conversion factors are used to initialize the static section of GLOBAL05 within the SPS, while the factory parameters are used to initialize GLOBAL04.

SS/L generates the data listed in the tables in ASCII format for the SPS. These data are used to input required database parameters to the OGE. Files are created for each satellite. Four contain conversion factors and calibration limits (CCL files), one for the Sounder, sides 1 and 2, and one for the Imager, sides 1 and 2. Four factory parameter files (FAC files) are also sent, one for the Sounder, sides 1 and 2, and one for the Imager, sides 1 and 2. The following eight SS/L filenames are for GOES-9: I.CCL_S091, I.CCL_S092, I.CCL_I091, I.CCL_I092, I.FAC_S091, I.FAC_S092, I.FAC_I091, and I.FAC_I092.

Each file has a header section containing the following information for the Imager and Sounder:

a. factory parameters (I.FAC)
b. conversion and calibration limits (I.CCL)
c. electronic side
d. date of revision
e. The name of the individual or organization generating a change.

These files contain 80-column Fortran formatted records with comments beginning in column one ('C') and data in column seven. A descriptive paragraph provides information about each set of variables and is followed by the data. There is one data value and its associated comment per record. The following example shows this:

```
CCCCC   Location values below must be positive integers
        SBBNC = 68          ! BLACKBODY LOCATION: N/S CYCLES
        SBBNI = 1402        ! N/S INCRMNTS
```

These ASCII files are reviewed and verified by SS/L and NOAA, and then loaded by CDA personnel into the appropriate SPS ORACLE database (one table per satellite).

The following tables are based upon the files for GOES L. Previous versions of the files may not contain all of the data listed.

Table 5-1. Imager Factory Calibration and Alignment Database

Parameters	Developer
Imager Data	
Alignment Data	
Instrument ID (1)	SS/L / ITT / ISI
BB location, N-S cycles (1)	
BB location, N-S increments (1)	
BB location, E-W cycles (1)	
BB location, E-W increments (1)	
West spacelook cycles (1)	
West spacelook increments (1)	
East spacelook cycles (1)	
East spacelook increments (1)	
Instrument nadir, N-S cycles (1)	
Instrument nadir, E-W cycles (1)	
Instrument nadir, N-S increments (1)	
Instrument nadir, E-W increments (1)	
Visible detectors E-W (x) offsets (8)	
IR detectors E-W (x) offsets (14)	
Visible detectors N-S (y) offsets (8)	
IR detectors N-S (y) offsets (14)	
Visible detectors radiance bias coefficients (8)	ITT
Visible detectors radiance gain coefficients (first-order) (8)	
Visible detectors radiance gain coefficients (second-order) (8)	
Visible detectors radiance-to-albedo conversion factor (1)	
IR detectors bias coefficients (14)	
IR detectors gain coefficients (first-order) (14)	
IR detectors gain coefficients (second-order) (14)	
IR detectors scale factors bias coefficients (14)	ITT / NOAA
IR detectors scale factors gain coefficients (first-order) (14)	
Imager Data	
Alignment Data	
Baseplate temperatures at which second-order gains were measured (4)	ITT
BB temperature to target radiance conversion coefficients (4, 14)	SS/L / ITT
Lower and upper limits associated with the three patch temperature control points for M mode 2 (6)	

Parameters	Developer
Telemetry coefficients (raw counts to engineering units)	
BB thermistor No. 1 terms (6)	ITT
BB thermistor No. 2 terms (6)	
BB thermistor No. 3 terms (6)	
BB thermistor No. 4 terms (6)	
BB thermistor No. 5 terms (6)	
BB thermistor No. 6 terms (6)	
BB thermistor No. 7 terms (6)	
BB thermistor No. 8 terms (6)	
Baseplate thermistor No. 1 terms (6)	
Baseplate thermistor No. 2 terms (6)	
Baseplate thermistor No. 3 terms (6)	
Baseplate thermistor No. 4 terms (6)	
Baseplate thermistor No. 5 terms (6)	
Baseplate thermistor No. 6 terms (6)	
Scan mirror thermistor terms (6)	
Primary mirror thermistor terms (6)	
Secondary mirror thermistor No. 1 terms (6)	
Secondary mirror thermistor No. 2 terms (6)	
Baffle thermistor No. 1 terms (6)	
Baffle thermistor No. 2 terms (6)	
Aft optics thermistor values (6)	
Telemetry Coefficients (raw counts to engineering units)	
Cooler radiator PRT terms (6) *	ITT
Wide range IR detector PRT terms (6) *	
Narrow range IR detector PRT terms (6) *	
Cooler housing coefficients (6)	
Electronics No. 1 thermistor terms (6)	
Electronics No. 2 thermistor terms (6)	
Patch control voltage gain/bias terms (2)	
Instrument current gain/bias terms (2)	
Number of raw blocks contaminated by ECAL at start of star data (skip, invalid) (8)	
Second-order gain table for the three control-point patch temperatures, Q mode 2 (14, 3)	
Second-order gain coefficients versus baseplate and patch control-point temperatures, Q mode 3 (4, 14, 3)	ITT / ISI / SS/L / NOAA
dR/dT Computation temperature (1)	
dR/dT Sigma ratio (14)	

Notes:

* The last two terms may be fill zeros.

Table 5-2. Imager Calibration Limits and Alignment Database

Parameters	Developer
Imager Telemetry Warning Limits	
BCD encoded time tag ID for creation time associated with this limits set (2)	ITT / ISI / SS/L / NOAA
Minimum filtered sample size limits (29)	
Low pass filter limit – counts (29)	
High pass filter limit – counts (29)	
Unfiltered mean low limit – counts (29)	
Filtered mean low limit – counts (29)	
Unfiltered mean high limit – counts (29)	
Filtered mean high limit – counts (29)	
Unfiltered sigma limit – counts (29)	
Filtered sigma limit – counts (29)	
Filtered mean low limit – engineering units (29)	
Filtered mean high limit – engineering units (29)	
Filtered sigma limit – engineering units (29)	
Imager Telemetry Critical Alarm Limits	
Minimum filtered sample size limits (27)	ITT / ISI / SS/L / NOAA
Filtered mean low limits – engineering units (27)	
Filtered mean high limits – engineering units (27)	
Filtered sigma limits – engineering units (27)	
Imager ECAL Warning Limits	
Excessive residual RMS limit (for all detectors) (1)	ITT / ISI / SS/L / NOAA
Channel 1 low filter limits/step – counts (16)	
Channel 2 low filter limits/step – counts (16)	
Channel 3 low filter limits/step – counts (16)	
Channel 4 low filter limits/step – counts (16)	
Channel 5 low filter limits/step – counts (16)	
Channel 1 high filter limits/step – counts (16)	
Channel 2 high filter limits/step – counts (16)	
Channel 3 high filter limits/step – counts (16)	
Imager ECAL Warning Limits	
Channel 4 high filter limits/step – counts (16)	ITT / ISI / SS/L / NOAA
Channel 5 high filter limits/step – counts (16)	
Leading sample discard count/detector (22)	
Minimum samples limit/detector (22)	

Parameters	Developer
Imager Spacelook Warning Limits (one per each visible and IR detector)	
Minimum filtered sample size limits (22)	ITT / ISI / SS/L / NOAA
Low filter limit – counts (22)	
High filter limit – counts (22)	
Unfiltered mean low limit – counts (22)	
Filtered mean low limit – counts (22)	
Unfiltered mean high limit – counts (22)	
Filtered mean high limit – counts (22)	
Unfiltered sigma limit – counts (22)	
Filtered sigma limit – counts (22)	
Filtered sigma limit – radiance (22)	
Filtered sigma limit – temperature (22)	
Imager Spacelook Critical Limits (one per each visible and IR detector)	
Minimum filtered sample size/detector (22)	ITT / ISI / SS/L / NOAA
Imager Pre-clamp Warning Limits (one per each visible and IR detector)	
Minimum filtered sample size limits (22)	ITT / ISI / SS/L / NOAA
Low filter limit – counts (22)	
High filter limit – counts (22)	
Unfiltered mean low limit – counts (22)	
Filtered mean low limit – counts (22)	
Unfiltered mean high limit – counts (22)	
Filtered mean high limit – counts (22)	
Unfiltered sigma limit – counts (22)	
Filtered sigma limit – counts (22)	
Filtered sigma limit – radiance (22)	
Filtered sigma limit – temperature (22)	
Imager BB Warning Limits (one per each IR detector)	
Minimum filtered sample size limits (14)	ITT / ISI / SS/L / NOAA
Low filter limit – counts (14)	
High filter limit – counts (14)	
Unfiltered mean low limit – counts (14)	
Filtered mean low limit – counts (14)	
Unfiltered mean high limit – counts (14)	
Filtered mean high limit – counts (14)	
Unfiltered sigma limit – counts (14)	
Filtered sigma limit – counts (14)	
Filtered sigma limit – radiance (14)	
Filtered sigma limit – temperature (14)	
Imager BB-Cal Critical Limits (one per each IR detector)	

Parameters	Developer
Minimum filtered sample size per detector (14)	ITT / ISI / SS/L / NOAA
Imager Temperature Critical Limits	
Maximum baseplate temperature (1)	ITT / ISI / SS/L / NOAA
Minimum baseplate temperature (1)	
Minimum filtered sample size/BB thermistor (1)	
Bias interpolation limits, max number msec between post and pre (3)	
Maximum rate between spacelevels measured at post clamp and pre-clamp (7)	
First-order gain, max mode 2 M gain rate (7)	
Maximum percent of outliers in modes 3, 5 (1)	
Maximum SEE, M mode 4 or 5 (7)	
Maximum RSS, M mode 6 or 7 (7)	
N-sigma limit for M calculations (1)	
Maximum number iterations, history sifting (1)	
Minimum number minutes between BB-Cals (1)	
M update interval, 2-minute units (1)	
Minimum Delta Patch (1)	
Minimum Delta Gain (7)	
Imager Temperature Critical Limits	
Mechanical limits – East cycle (1)	ITT / ISI / SS/L / NOAA
Mechanical limits – East increment (1)	
Mechanical limits – North cycle (1)	
Mechanical limits – North increment (1)	
Mechanical limits – South cycle (1)	
Mechanical limits – South increment (1)	
Mechanical limits – West cycle (1)	
Mechanical limits – West increment (1)	

Table 5-3. Sounder Factory Calibration and Alignment Database

Parameters	Developer
Sounder Data	
Instrument ID (1)	ITT / ISI / SS/L / NOAA
Alignment Data	
BB location, N-S cycles (1)	SS/L / ITT / ISI
BB location, N-S increments (1)	
BB location, E-W cycles (1)	
BB location, E-W increments (1)	
West spacelook cycles (1)	
West spacelook increments (1)	
East spacelook cycles (1)	
East spacelook increments (1)	
Instrument nadir, N-S cycles (1)	
Instrument nadir, E-W cycles (1)	
Instrument nadir, N-S increments (1)	
Instrument nadir, E-W increments (1)	
Visible detector E-W (x) offsets (4)	
IR detector E-W (x) offsets (12)	
Visible detector N-S (y) offsets (4)	
IR detectors N-S (y) offsets (12)	
Star sense E-W (x) offsets (8)	
Star sense N-S (y) offsets (8)	
Visible detectors radiance bias coefficients (nominal temp) (4)	ITT
Visible detectors radiance gain coefficients (nominal temp) (first-order) (4)	
Visible detectors radiance gain coefficients (nominal temp) (second-order) (4)	
Visible detectors radiance-to-albedo conversion factor (1)	
IR detectors bias coefficients (72)	
IR detectors gain coefficients (first-order) (72)	
IR detectors gain coefficients (second-order) (72)	
IR detectors scaling bias coefficients (72)	ITT / NOAA
IR detectors scaling gain coefficients (first-order) (72)	
Baseplate temperatures at which second-order gains were measured (4)	ITT
Alignment Data	
BB temperature to target radiance conversion coefficients (4, 72)	SS/L / ITT
Patch temperature ranges for 3 control points (6)	ITT

Parameters	Developer
BB thermistor No. 1 terms (6)	ITT
BB thermistor No. 2 terms (6)	
BB thermistor No. 3 terms (6)	
BB thermistor No. 4 terms (6)	
BB thermistor No. 5 terms (6)	
BB thermistor No. 6 terms (6)	
BB thermistor No. 7 terms (6)	
BB thermistor No. 8 terms (6)	
Baseplate thermistor No. 1 terms (6)	
Baseplate thermistor No. 2 terms (6)	
Baseplate thermistor No. 3 terms (6)	
Baseplate thermistor No. 4 terms (6)	
Baseplate thermistor No. 5 terms (6)	
Baseplate thermistor No. 6 terms (6)	
Scan mirror thermistor terms (6)	
Primary mirror thermistor terms (6)	
Secondary mirror thermistor No. 1 terms (6)	
Secondary mirror thermistor No. 2 terms (6)	
Baffle thermistor No. 1 terms (6)	
Baffle thermistor No. 2 terms (6)	
Aft optics thermistor terms (6)	
Telemetry Coefficients (raw counts to engineering units)	
Cooler radiator PRT terms (6) *	ITT
Wide range IR detector PRT terms (6)	
Narrow range IR detector PRT terms (6) *	
Filter wheel housing PRT terms (6) *	
Cooler housing coefficients (6)	
Electronics No. 1 thermistor terms (6)	
Electronics No. 2 thermistor terms (6)	
Patch control voltage gain/bias terms (2)	
Instrument current gain/bias terms (2)	
Filter wheel heater voltage gain/bias terms (2)	
Three control point patch temperature table for Q mode 2 (second order) (72, 3)	
Three control point patch temperature table for Q mode 3 (second order) (4, 72, 3)	
Computation temperature (STSIGMA) to convert noise from units of radiance to units of temperature (1)	
Constants to convert noise from units of radiance to units of temperature (72)	ITT / ISI / SS/L / NOAA

Notes:

* The last two terms may be fill zeroes.

Table 5-4. Sounder Calibration Limits

Parameters	Developer
Sounder Telemetry Warning Limits (in the tables)	
BCD time tag-identifies sounder limits set (1)	ITT / ISI / SS/L / NOAA
Minimum filtered sample size limit (31)	
Low pass filter limit – counts (31)	
High pass filter limit – counts (31)	
Unfiltered mean low limit – counts (31)	
Filtered mean low limit – counts (31)	
Unfiltered mean high limit – counts (31)	
Filtered mean high limit – counts (31)	
Unfiltered sigma high limit – counts (31)	
Filtered sigma limit – counts (31)	
Filtered mean low limit – engineering units (31)	
Filtered mean high limit – engineering units (31)	
Filtered sigma limit – engineering units (31)	
Sounder Telemetry Critical Alarm Limits	
Minimum filtered sample size limits (28)	ITT / ISI / SS/L / NOAA
Filtered mean low limits – engineering units (28)	
Filtered mean high limits – engineering units (28)	
Filtered sigma limits – engineering units (28)	
Sounder ECAL Warning Limits	
Excessive residual RMS limit (for all detectors) (1)	ITT / ISI / SS/L / NOAA
Visible low limits/step – counts (16)	
IR long wave low limits/step – counts (16)	
IR medium wave low limits/step – counts (16)	
IR short wave low limits/step – counts (16)	
Visible high limits/step – counts (16)	
IR long wave high limits/step – counts (16)	
IR medium wave high limits/step – counts (16)	
IR short wave high limits/step – counts (16)	
Minimum samples limit/step/detector (16)	

Parameters	Developer
Sounder Spacelook Warning Limits (one per each visible and IR detector per channel)	
Minimum filtered sample size limits (76)	ITT / ISI / SS/L / NOAA
Low filter limit – counts (76)	
High filter limit – counts (76)	
Unfiltered mean low limit – counts (76)	
Filtered mean low limit – counts (76)	
Unfiltered mean high limit – counts (76)	
Filtered mean high limit – counts (76)	
Unfiltered sigma limit – counts (76)	
Filtered sigma limit – counts (76)	
Filtered sigma IR limit – radiance (72)	
Filtered sigma IR limit – temperature (72)	
Sounder Spacelook Critical Limits (one per each visible and IR detector per channel)	
Minimum sample size/detector (76)	ITT / ISI / SS/L / NOAA
Sounder BB Warning Limits (one per each IR detector per channel)	
Minimum filtered sample size limits (72)	ITT / ISI / SS/L / NOAA
Low filter limit – counts (72)	
High filter limit – counts (72)	
Unfiltered mean low limit – counts (72)	
Filtered mean low limit – counts (72)	
Unfiltered mean high limit – counts (72)	
Filtered mean high limit – counts (72)	
Unfiltered sigma limit – counts (72)	
Filtered sigma limit – counts (72)	
Filtered sigma limit – radiance (72)	
Filtered sigma limit – temperature (72)	
Sounder BB-Cal Critical Limits (one per each IR detector per channel)	
Minimum filtered sample size/channel – detector (72)	ITT / ISI / SS/L / NOAA
Sounder Linear Regression Critical Limit	
Maximum standard error of estimate (1)	ITT / ISI / SS/L / NOAA
Sounder Temperature Critical Limits	
Maximum baseplate temperature (1)	ITT / ISI / SS/L / NOAA
Minimum baseplate temperature (1)	
Minimum filtered sample size/BB thermistor (1)	

Parameters	Developer
First Order Gain (M) Computation Limits	
Maximum mode 2 M-gain rate (72)	ITT / ISI / SS/L / NOAA
Maximum percent of outliers in modes 3 and 5 (1)	
Maximum SEE, M modes 4 and 5 (72)	
Maximum RSS, M modes 6 and 7 (72)	
N-sigma limit for M calculations (1)	
Maximum number iterations, history sifting (1)	
Maximum number minutes between BB-Cals (1)	
M update interval (2-minute units) (1)	
Minimum delta patch - gain mode 2 (1)	
Minimum delta gain - gain mode 2 (72)	
Mechanical limits - East cycle (1)	
Mechanical limits - East increment (1)	
Mechanical limits - North cycle (1)	
Mechanical limits - North increment (1)	
Mechanical limits - South cycle (1)	
Mechanical limits - South increment (1)	
Mechanical limits - West cycle (1)	
Mechanical limits - West increment (1)	
A/D conversion correction (neg) (1)	
A/D conversion correction (pos) (1)	

5.2 OATS

All OATS external database or file inputs or outputs are made through the OATS External Port interface defined in Section 2.8. SSGS uses two star catalogs: one used by the INR System and the second used by the S/C star trackers. The INR star catalog is ingested via OPORT in ASCII format. OATS supports maintenance of this catalog by extracting the active catalog, translating it to ASCII, and submitting it for update via the OPORT function. Star Catalog updates are received from NASA for transfer to OATS for updating the Star Catalog via the OATS OPORT Ingest Star Catalog function.

5.2.1 INR STAR Catalog Disk

The STAR Catalog is generated from NASA's SKYMAP system and the FK5 Star Catalog. NASA provides it to NOAA as an ASCII file. Once it is loaded into OATS from the OATS External Interface Port, it is ingested by OATS using the OPORT function's INGEST STAR CATALOG selection.

The STAR Catalog file consists of seven records (lines) of informational text that are ignored upon ingest. The records that follow the informational text are STAR records that adhere to the following format:

Description	Starting Col	Format
STAR ID	1	14
Right Ascension (deg)	8	F10.6
Declination (deg)	20	F10.6
Imager S-N	33	F6.2
Proper Motion Right ascension (sec/yr)	41	F7.3
Proper Motion Declination (arcsec/yr)	51	F6.3
Parallax	60	F5.3
Sounder S/N	68	F6.2

5.2.2 Star Tracker Star Catalog

The star tracker star catalog is supplied and maintained by software outside the SSGS. They are usually received directly from NASA or accessible via FTP.

5.2.3 U.S. Naval Observatory Data Disk

This disk provides a copy of the SER7.DAT file from the U.S. Naval Observatory. It is used to obtain the prediction coefficients and time conversion tables used by OATS. Once it is copied to the OATS, it is ingested by OATS using the OPORT function's INGEST USNO TIME DATA selection.

The file contains a varying number of lines of data and informational text. The start of the prediction coefficients is identified by the presence of the string "x =" in columns 7-9 while the start of the time conversion tables are identified by the presence of the string "MJD" in columns 21-23. This information can also be directly acquired over the Internet from the International Earth Rotation and Reference Systems Service (IERS), Rapid Service Prediction Center for Earth Orientation Parameters, accessed through the U.S. Naval Observatory home page via the URL **http://maia.usno.navy.mil/**. Selecting the link, "Latest Issue of IERS Bulletin A" will display a page similar to the one shown below.

```
*********************************************************************
*                                                                   *
*                   I E R S   B U L L E T I N - A                   *
*                                                                   *
*           Rapid Service/Prediction of Earth Orientation           *
*********************************************************************
10 March 2005                                        Vol. XVIII No. 010
____________________________________________________________________
GENERAL INFORMATION:
   To receive this information electronically, contact:
      ser7@maia.usno.navy.mil or use http://maia.usno.navy.mil/
   MJD = Julian Date - 2 400 000.5 days
   UT2-UT1 = 0.022 sin(2*pi*T) - 0.012 cos(2*pi*T)
                               - 0.006 sin(4*pi*T) + 0.007 cos(4*pi*T)
      where pi = 3.14159265... and T is the date in Besselian years.
   TT = TAI + 32.184 seconds
   DUT1= (UT1-UTC) transmitted with time signals
       =  -0.5 seconds beginning 29 April    2004 at 0000 UTC
   Beginning 1 January 1999:
      TAI-UTC(BIPM) = 32.000 000 seconds
*********************************************************************
*      No leap second will be introduced in UTC on 30 June 2005.    *
*    New USNO VLBI Intensive Series was added on 04 November 2004.  *
*       Bulletin A is now compliant with IAU 2000 resolutions.      *
*    See notice at the end of this Bulletin A for more details.     *
*********************************************************************
____________________________________________________________________
 The contributed observations used in the preparation of this Bulletin
 are available at ftp://maia.usno.navy.mil/bulla-data.html.  The
 contributed analysis results are based on data from Very Long Baseline
 Interferometry (VLBI), Satellite Laser Ranging (SLR), the Global
 Positioning System (GPS) satellites, Lunar Laser Ranging (LLR), and
 meteorological predictions of variations in Atmospheric Angular
 Momentum (AAM).
____________________________________________________________________

COMBINED EARTH ORIENTATION PARAMETERS:

                          IERS Rapid Service
          MJD      x    error     y    error   UT1-UTC   error
                   "      "       "      "        s        s
5  3  4  53433  .01718 .00005  .21504 .00005  -.551213  .000005
5  3  5  53434  .01509 .00005  .21584 .00004  -.552197  .000010
5  3  6  53435  .01275 .00005  .21645 .00005  -.553144  .000010

5  3  7  53436  .01061 .00004  .21698 .00004  -.554111  .000013
5  3  8  53437  .00875 .00003  .21768 .00004  -.555207  .000013
5  3  9  53438  .00682 .00002  .21850 .00003  -.556463  .000013
5  3 10  53439  .00477 .00002  .21940 .00003  -.557940  .000013

____________________________________________________________________
```

PREDICTIONS:
The following formulas will not reproduce the predictions given below, but may be used to extend the predictions beyond the end of this table.

```
x =   .0452 -  .0574 cos A +  .0053 sin A +  .0215 cos C -  .1412 sin C
y =   .3482 +  .0054 cos A +  .0566 sin A -  .1412 cos C -  .0215 sin C
   UT1-UTC =  -.5674 -  .00034 (MJD - 53444) - (UT2-UT1)
```

where A = 2*pi*(MJD-53439)/365.25 and C = 2*pi*(MJD-53439)/435.

TAI-UTC(MJD 53440) = 32.0
The accuracy may be estimated from the expressions:
S x,y = 0.00068 (MJD-53439)**0.80 S t = 0.00025 (MJD-53439)**0.75

Estimated accuracies are:	Predictions	10 d	20 d	30 d	40 d
	Polar coord's	0.004	0.007	0.010	0.013
	UT1-UTC	0.0014	0.0024	0.0032	0.0040

			MJD	x(arcsec)	y(arcsec)	UT1-UTC(sec)
2005	3	11	53440	0.0027	0.2203	-0.55963
2005	3	12	53441	0.0008	0.2211	-0.56135
2005	3	13	53442	-0.0012	0.2219	-0.56288
2005	3	14	53443	-0.0031	0.2227	-0.56409
2005	3	15	53444	-0.0049	0.2235	-0.56497
2005	3	16	53445	-0.0068	0.2243	-0.56562
2005	3	17	53446	-0.0086	0.2251	-0.56619
2005	3	18	53447	-0.0104	0.2260	-0.56667
2005	3	19	53448	-0.0122	0.2268	-0.56714
2005	3	20	53449	-0.0140	0.2277	-0.56776
2005	3	21	53450	-0.0158	0.2285	-0.56860
2005	3	22	53451	-0.0175	0.2294	-0.56967
2005	3	23	53452	-0.0193	0.2304	-0.57097
2005	3	24	53453	-0.0210	0.2313	-0.57250
2005	3	25	53454	-0.0227	0.2323	-0.57421

Use the Internet browser's "Save File" option to save a local, ASCII version of the IERS Bulletin A. The file is then transferred to a platform on the GOES Operations Network. Currently, and typically, Windows-family workstations running the Pathworks product line to implement DECnet network protocols serve as this intermediary platform. A final transfer of the file is made to an OATS workstation. Experience has shown that the transfer of the Bulletin A between several different platforms can introduce unexpected format transformations, most notably, errant line feed and carriage control characters. An edit of the file on the intermediate platform, with a deliberate selection of format at the time of saving, has been found to recover the format suitable for ingest by OATS. Ingest of the IERS Bulletin A information by OATS is achieved using the INGEST USNO TIME DATA option of the Spacecraft Manager's Utility OATS External Interface Port (OPORT) feature. OATS Event Display Messages during the ingest operation show the new time limits of the ingested data, as well as the presence or absence of any leap seconds announced in the Bulletin.

5.2.4 OATS OPORT Files

The OATS OPORT function imports and exports ASCII files from a number of files found in the satellite dependent and independent database directories. The transfer of these files to the OATS External Interface Port makes OATS data available to outside plotting software and to other systems for data analysis. The files have the following general format.

1. Each file name has an extension of ".OPT".

2. Each file starts with a header record that gives the date and type of data in the file.

3. All physical records are less than 133 characters in length allowing the file to be printed on a line printer.

4. Logical records may span more than one physical record.

5. If the data consists of more than one file, the files are separated by a record containing ***EOF***.

To process the data in any of these files, other systems must be aware of the structure of the associated input source file since it is reflected in the .OPT file. For a list of the OPORT . OPT files and descriptions of the input source files, refer to OATS documentation, specifically the *Orbit and Attitude Tracking System (OATS) Software Maintenance Manual / DRL 504-06, Part 22 of 22; Vols. 1-4,* (G022) and the *GOES N-P SSGS, OATS Hardware Operations and Maintenance Manual* (G280).

5.2.5 OATS Database Disk

OATS maintains a Satellite Independent Database and Satellite Dependent Database(s) (one for each satellite). The independent database contains system-wide data that applies to all satellites while the dependent database contains data that is unique to a specific satellite. BSS generates the initial versions of the databases that are provided to NOAA as ASCII files. The databases, which are loaded into and out of OATS by utility programs DBREST and WRTFLT, are maintained by NOAA using the EDSP (Data Edit and Display) function of the OATS.

The *GOES-NOP SSGS Orbit and Attitude Tracking System (OATS) User's Manual* provides database field descriptions in Section 3.2, and the description of the files on the OATS database disk, which provide these databases, in Section 9.6.

5.2.6 OATS O&A Disk

An O&A parameters set (O&A set) is produced and transmitted via the O&A Data Response message (Type 33) to the SPS every time an IMC UPDATE RUNSTREAM is executed on the OATS (at least once daily). To provide this data to the SPS, should there be a communications

outage preventing this transmission, an ASCII file of message Type 33 is created by OATS which can be transferred to portable media for ingest by the SPS. (Refer to Section 4.0 of this document for the format of message Type 33.)

This file has a name of EX33yyyy.OPT, where yyyy is the associated IMC Set ID. The file consists of a print of the message in human readable format followed by a hexadecimal dump of the actual message.

5.3 GIMTACS (GOES I-M)

GIMTACS has the ability to upload reprogrammable patches to the spacecraft onboard AOCS. The upload patch, which contains a series of raw commands, is provided by SS/L and is described in the next section.

5.3.1 AOCS Reprogrammability Disk

This section defines the format of the Attitude and Orbit Control Subsystem (AOCS) Reprogramming floppy disk that is generated and provided by SS/L. The data is used for input to GIMTACS for upload to the GOES I/J/K spacecraft. (Note: This section does not apply to GOES L/M.) Disk characteristics, file(s), the structure of the records in the file(s), and the contents of the records are described below.

Existing capabilities of GIMTACS will support AOCS Reprogramming, if these specifications are followed.

The file or files on the disk (3.5" PC floppy) are sequential ASCII text files with carriage control. Records may be fixed or variable length, but records do not exceed a length of 80 bytes. Records containing greater than 80 bytes, will be truncated at 80 bytes.

The file containing the actual spacecraft commands to be uplinked should contain one command per record. The format of the record should be as follows:

Columns 1 - 14: Absolute execution time or blank (normally blank)
Time should be in the format DDD/HH:MM:SS.T,
where DDD is julian day,
HH is hours,
MM is minutes,
SS is seconds, and
T is tenths of seconds.
["/" ":" "." are ASCII inclusions at Columns
4, 7, 10, and 13.]

If no time is specified, the command will be executed as soon as the previous command has completed execution.

Column 15: Blank

This column separates time from the command.

Columns 16 - 80: Command directive in the following format:

```
/ARAWCMD CV= 9 D= '000'X

CV is a command vector in decimal
 D is a raw 10-bit data value that can be
   specified in decimal (default),
   hex ('000'X), octal ('0000'0), or
   binary ('0000000000'B).
```

Any number of spaces may be specified as a delimiter between fields, but spaces may not be specified within a field. One space is required between /ARAWCMD and CV, and between the command vector value and the D for the data value. The following are examples of acceptable and unacceptable directives:

Acceptable:

```
/ARAWCMD CV = 9 D   =   '000'H
/ARAWCMD CV=9 D='000'H
```

Unacceptable:

```
/ARAWCMD    CV=9 D   =   '000'H
/ARAWCMD    C V = 9D='000'H
/ARAWCMD    CV = 9 D='0  00'H
```

A record may contain only a comment or a comment may be specified in the same record as the command. A comment begins with a ';' or a ';C', to indicate a command comment and may begin in any column.

The file or files will be transformed into a command level schedule in GIMTACS. First, the disk is loaded on a PC connected to the GIMTACS LAN, and its files are downloaded to GIMTACS. Then, during a schedule create or update session, the file(s) are included into the command schedule using the INCLUDE command in the EVE editor.

The following are several examples of command inputs and the corresponding command frame GIMTACS uplinks. This type of command format will be used to load the reprogrammable area of memory. GIMTACS will automatically incorporate in the command, prior to uplink, the execute vector, the decoder, the default value of 100 ms for execution duration, and include the VCC counter or compute the error detection code. These examples were built using decoder A, the command mode was autonomous, and the execution duration default was 100 ms.

```
;
```

```
; LOAD O'S INTO ADDRESS 6
;
                    /ARAWCMD CV = 57 D = 505
                    /ARAWCMD CV = 57 D = 1017
                    /ARAWCMD CV = 40 D = 1023
                    /ARAWCMD CV = 40 D = 511
```

The following are the corresponding command frames that GIMTACS uplinks in hexadecimal:

```
'CDB80A3F3C99'X
'CDB80A7F3CEF'X
'CDB80A5FF40E'X
'CDB80A1FF478'X
```

5.4 Telemetry & Command Project Database

The telemetry and command PDB (Project Database) defines the information needed for extracting and formatting telemetry mnemonic values from the PCM telemetry streams, for producing the binary representation of commands from user-entered mnemonics, and the associated validation information for monitoring telemetry and creating valid commands.

The *Product Specification for the GOES N-P Spacecraft - Spacecraft to Ground Database ICD*, defines the format of the database as generated by BSS's Spacecraft System Engineering Database (SSED). The SSED consists of a set of ASCII text files containing the raw telemetry and command definitions. SSED files have *.txt* file name extensions. BSS provides the SSED via CD distribution.

Upon SSGS receipt, the SSED is ingested by GTACS into the offline EPOCH Database Subsystem, an Oracle-based product used for database validation and maintenance. The Epoch Database Subsystem generates the set of database files containing telemetry, command, and global variable definitions in the format required for use by GTACS real time processing. These files are ASCII text files and have *.lis* file name extensions. Each spacecraft has its own set of database files; these files must be distributed from the SSGS database maintenance workstation to each GTACS server.

Appendix A. Abbreviations and Acronyms

AAA	[Mode AAA] GOES-4/7 VAS Operational Retransmitted Data Format - (discontinued October 1995 / replaced by GVAR)
AC	Alternating Current
ADM	Attitude Data Multiplexer
ADS	Angular Displacement Sensor
ACE	Attitude Control Electronics
AGC	Automatic Gain Control
ANSI	American National Standards Institute
AOCE	Attitude and Orbit Control Electronics
AOCS	Attitude and Orbit Control Subsystem
AP	Application
APID	Application ID
arcsec	arcsecond unit of angular measurement
ARP	Address Resolution Protocol
ASCII	American Standard Code for Information Interchange
AVS	Angular Velocity Sensor
B-Mode	Bias Mode Algorithm
BB	Blackbody
BB-Cal	Blackbody Calibration
BCD	Binary Coded Decimal
BER	Bit Error Rate
BNC	Bayonet Neill-Concelman
BOH	Block Overhead
bps	bits per second
BPSK	Binary Phase Shift Keyed
BSE	Boeing Spacecraft Emulator
CAWS	Consolidated Analysis Workstation
CC	Communications Controller
CCITT	International Telegraph and Telephone Consultative Committee
CCL	conversion factors and calibration limits
CCSDS	Consultative Committee for Space Data Systems
CDA	Command and Data Acquisition
CDAS	Command and Data Acquisition Stations
CDET	Channel-Detector
CIP	Connector Interface Panel
CMD	Command
CONUS	Continental United States
CORT	Co-registration Table
COTS	Commercial-Off-The-Shelf

CRC	Cyclic Redundancy Check
CSMA/CD	Carrier Sense Multiple Access with Collision Detection
DARPA	Defense Advanced Projects Agency
DART	Dedicated Advanced Reprogramming Testbed
dB	Decibel
DB	Database
dBm	power level in decibels
DCS	Data Collection System
DEC	Digital Equipment Corporation
Dev	Development
DID	Dynamic Interaction Diagnostic
DIRA	Digital Integrating Rate Assembly
DMV	Interval Mean Value or Detector
Doc	Documentation
DOY	Day of year
DSN	Deep Space Network
DSS	Digital Sun Sensor
DTE	Data Terminal Equipment
DUS	Data Utilization Station
DWT	Window Threshold Tolerance/Detector
DWTR	Digital Wideband Tape Recorder
E-W	East-West
ECAL	Electronic Calibration
EDSP	Data Edit and Display
EDT	Engineering Design Team
EIB	Equipment Idle Block
ELUG	Earth Location User's Guide
EMV	Event Mean Value
ES	Earth Sensor
ETC	Event Thresholding Count
ETL	Event Thresholding Level
FCDAS	Command and Data Acquisition Station at Fairbanks, Alaska
FCS	Frame Check Sequence
FIFO	First In First Out
FOV	Field of View
Feq	Frequency
FTP	File Transfer Protocol
GAIM	GTACS Archive Interface Machine
GAS	GOES Archive System
GFE	Government Furnished Equipment
GIMTACS	GOES I-M Telemetry and Command System

GOES	Geostationary Operational Environmental Satellite
GOF	Goodness-of-Fit
GRT	Ground Receipt Time
GSFC	Goddard Space Flight Center
GSU	GOES reSampling Unit
GTACS	GOES N-P Telemetry And Command System
GUI	Graphical User Interface
GVAR	GOES Variable Format
HDLC	High-Level Data Link Control
HIRU	Hemispheric Inertia Reference Unit
Hz	Hertz
IBBC	Imager Blackbody Statistics and Data
IBW	Imager Bandwidth
ICAL	Imager Calibration Coefficients and Limits
ICD	Interface Control Document
ICMP	Internet Control Message Protocol
ICSE	Imager Compensation and Servo Errors
ID	Identification
IECL	Imager ECAL Statistics and Data
IEEE	Institute of Electrical and Electronic Engineers
IERS	International Earth Rotation and Reference Systems Service
I/F	Interface
IF	Intermediate Frequency
IGFOV	Instantaneous Geometric Field of View
IMC	Image Motion Compensation
IMCCAL	Image Motion Compensation Calibration
INR	Image Navigation and Registration
INUT	Visible NLUTs
IO	Instruments of Opportunity
I/O	Input/Output
IP	Internet Protocol
IPD	Information Processing Division
IR	Infrared
IRB	Imager Raw Data Block
IRIG-B	Inter-Range Instrumentation Group - Time Code Format B
ISCAN	Total B0 B10 length (bits)
ISEC	Instrument Systematic Error Compensation
ISPC	Imager Spacelook Statistics and Data
IST	Imager Scan Time
ISTR	Star Sense Statistics and Data
ISTSC	Spare time/second
ISTSN	Spare time/scan
ISTT	GVAR Tx time

ISWD	Imager Scan Width
ITLM	Imager Telemetry Statistics
kbps	Kilobits Per Second
km	Kilometers
LAN	Local Area Network
LLC	Logical Link Control
LMS	Lightning Mapper Sensor
LOR	Launch and Orbit Raising
LSB	Least Significant Bit
LUT	Look-Up Table
MAC	Medium Access Control
MAU	Medium Attachment Unit
MBCC	Midnight Blackbody Calibration Correction
Mbps	megabits per second
MDFL	Minimum Data Field Length
MDL	Multiuse Data Link
MHz	megahertz
MIB	Management Information Base
MMC	Mirror Motion Compensation
MPS	MDL Processing System
MRS&S	MDL Receive System and Server
MSB	Most Significant Bit
msec	milliseconds
MSPS	Modernized Sensor Processing System
N-S	North-South
NASA	National Aeronautics and Space Administration
Nascom	NASA Communications Network
NEMA	National Electrical Manufacturers Association
NESDIS	National Environmental Satellite, Data, and Information Service
NFS	Network File System
NLUT	Normalization Look-Up Table
NOAA	National Oceanic and Atmospheric Administration
NPIR	Number of Primary IR Detectors
NRZ-L	Non-Return to Zero Level
NRZ-S	Non-Return to Zero Space
ns	nanosecond
NSC	NOAA Science Center
NSOF	NOAA Satellite Operations Facility
NSP	Network Services Protocol
NTACTS	N-P Telemetry Acquisition and Command Transmission System
NTP	Network Time Protocol

NWS	National Weather Service
O/H	Overhead
O&A	Orbit and Attitude
OAD	Orbit and Attitude Determination
OATS	Orbit and Attitude Tracking System
ODAPS	OGE Data Acquisition and Patching Subsystem
OGE	Operations Ground Equipment
ohm	SI unit of electrical resistance
OP	Operations
OPORT	OATS External Interface Port
OPR	Operate
OSI	Open System Interconnection
OSI	Offline Instrument Simulator
OSPO	Office of Satellite and Product Operations
P/F	Poll/Final
PAD	Part Approval Document
PC	Personal Computer
PCM	Pulse Code Modulation
PDR	Processed Data Relay
PDU	Protocol Data Unit
PID	Parameter Identification
PM	Product Monitor
PN	Pseudo-random Noise
ppm	parts per million
pps	pulse-per-second
PROM	Programmable Read Only Memory
PTP	Programmable Telemetry Processor
PWM	Pulse Width Modulated
QPSK	Quadrature Phase Shift Keying
RARP	Reverse Address Resolution Protocol
REPGM	Reprogram
RF	Radio Frequency
RFC	Request for Comments
RG	Radio Grade
RPC	Remote Procedure Call
RPM	Replacement Product Monitor
RMS	Root Mean Square
RS	Recommended Standard
RSS	Root Sum Squared
σ	sigma, standard deviation

S/C	Spacecraft
S-N	South-North
SAD	Sounder/Auxiliary Data
SADA	Solar Array Drive Assembly
SAD ID	SAD Block Identifier
SAP	Service Access Points
SBBC	Sounder Blackbody Statistics/Data
SBOH	Sounder Block 11 Overhead
SBS	Straight Binary Seconds
SBW	Sounder Bandwidth
SCAL	Sounder Calibration Coefficients/Limits
SCC	Single Chord Correction
SCSE	Sounder Compenstation/Servo Errors
SDB	Sounder Sensor Data Block 11
SDI	Sensor Data Interface
SDL	Sensor Data Link
sec	second
SECL	Sounder ECAL Statistics/Data
SEE	Standard Error of Estimate
SEM	Space Environment Monitor
SFD	Start of Frame Delimiter
SK	Station-keeping
SMC	Spacecraft Motion Compensation
SNMP	Simple Network Management Protocol
SNUT	Sounder Visible NLUTs
SOCC	Satellite Operations and Control Center
Sol	Solicited
SPS	Sensor Processing System
SRB	Sounder Raw Data (block)
SRI	Summation Research Inc.
SRSO	Super Rapid Scan Operations
SS/L	Space Systems/Loral
SSAA	Short Span Attitude Adjustment
SSCAN	Sounder Documentation / Scan
SSGS	Spacecraft Support Ground System
SSO&A	Short Span O&A Adjustment
SSPC	Sounder Spacelook Statistics / Data
SST	Sounder Scan Time (seconds)
SSTR	Sounder Star Statistics / Data
SSWD	Sounder Scan Width (degrees)
STLM	Sounder Telemetry Statistics
SWPC	Space Weather Prediction Center
SXI	Solar X-ray Imager
T_x	Transmit

T&C	Telemetry and Command
TACTS	Telemetry Acquisition and Command Transmission System
TC	Telecommand
TCP	Transmission Control Protocol
TCP/IP	Transmission Control Protocol/Internet Protocol
TCS	Telemetry and Command System
Telnet	Remote Terminal Emulation Protocol
TEV	Time of Event
TLM	Telemetry
TNC	Threaded Navy Connector
TOD	Time of Day
TTL	Time To Live
UAQPSK	Unbalanced, Asynchronous, Quadrature Phase Shift Key
UDP	User Datagram Protocol
UI	Unnumbered Information
ULI	Uplink Interface
Unsol	Unsolicited
USNO	United States Naval Observatory
UTC	Universal Time Code
UTP	Unshielded Twister Pair
VAC	Volts Alternating Current
VAR	Variable
VAS	VISSR Atmospheric Sounder
VIE	VAS Interface Electronics
VIS	Visible Detector
VISSR	Visible Infrared Spin Scan Radiometer
VLAN	Virtual LAN
W	Watts
W-E	West-East
WAN	Wide Area Network
WB	Wide-Band Telemetry
WBU	Wallops Backup CDAS
WCDAS	Command and Data Acquisition Station at Wallops Island, Virginia
WEFAX	Weather Facsimile
WMV	Window Mean Value
WTC	Window Thresholding Count
WTL	Window Threshold Level/Detector
XDR	External Data Representation
XGOHI	eXtended GOES High Inclination
XID	eXchange IDentification
XOR	eXclusive-OR

Document Distribution List

Numerical Location Order

DocID	Title	Version	Date
G023	Operations Ground Equipment (OGE) Interface Specification / DRL 504-02-1 (Part 1)	Rev. 2	Mar. 25, 2011

Loc #	Person	Location Title	Address	Email Address	Copies
001	Cauley, Verna {Key}	OSD Library	NSOF, Room 1005	N/A	1
001e	Cauley, Verna {Key}	OSD Library (eCopy)	NSOF, Room 1005	N/A	1
002	James, Rick {Key}	OSPO Library	NSOF, Room 1005	N/A	1
002e	James, Rick {Key}	OSPO Library (eCopy)	NSOF, Room 1005	N/A	1
003	Sheridan, Jim {Key}	WCDAS Library	WCDAS, Wallops, VA	N/A	1
003e	Sheridan, Jim {Key}	WCDAS Library (eCopy)	WCDAS, Wallops, VA	N/A	1
004	Ledlow, Larry {Key}	FCDAS Library	FCDAS, Fairbanks, AK	N/A	1
004e	Ledlow, Larry {Key}	FCDAS Library (eCopy)	FCDAS, Fairbanks, AK	N/A	1
005	Araiza, Gabrielle {Key}	NASA/GSFC GOES Library	Bldg. 6, Room W237	N/A	1
005e	Araiza, Gabrielle {Key}	NASA/GSFC GOES Library (eCopy)	Bldg. 6, Room W237	N/A	1
006e	Cantril, Jerry	Columbus Technology and Services, Chief (eCopy)	NSOF, Room 1832		1
006n	Cantril, Jerry	Columbus Technology and Services, Chief	NSOF, Room 1832	jcantril@columbususa.com	1
008n	Mahmot, Ron	Chief, OSPO/Mission Operations Division	NSOF, Room 1508	Ron.Mahmot@noaa.gov	1
009n	Amburgey, Keith	OSPO Corporate Services Manager	NSOF, Room 1506	Keith.Amburgey@noaa.gov	1
013n	Hampton, Cindy	OSPO/Engineering Branch Chief	NSOF, Room 1558	Cynthia.Hampton@noaa.gov	1
015	James, Rick {Key}	Launch Control Room #1 (LCR#1)	NSOF, Room 1532	N/A	1
022n	Evry, Cheryl	POES Ground Systems Engineer	NSOF 1312	Cheryl.Evry@noaa.gov	1
023n	Ledlow, Larry {Key}	OSPO/FCDAS Station Manager	Fairbanks, Alaska	Larry.Ledlow@noaa.gov	1
026	James, Rick {Key}	GOES Operations Area	NSOF, Room 1532	N/A	1
027n	McMath, Albert	SOCC Backup Ops at Wallops (GOES & POES)	WCDAS, Wallops, VA	albert.j.mcmath.jr@noaa.gov	1
028n	Tsui, John	GOES Engineering Team Lead	NSOF, Room 1582	john.tsui@noaa.gov	1
029	Robinson, Diane	GOES Software Lead	NSOF, Room 1363	N/A	1
029n	Robinson, Diane	GOES Software Lead	NSOF, Room 1363	Diane.Robinson@noaa.gov	1
030n	Downes, Michael	GOES Ground System Engineer	NSOF, Room 1587	Michael.Downes@noaa.gov	1

Loc #	Person	Location Title	Address	Email Address	Copies
045	James, Rick {Key}	SOCC Engineering Analysis Room (NEAR)	NSOF, Room 1532	N/A	1
051n	Pozniak, Alex	IT Specialist	NSOF, Cube 1377	alex.pozniak@noaa.gov	1
055n	Arnaud, Dan	Aerospace	NSOF, Room 1221	daniel.f.arnaud@aero.org	1
059n	Baker, Mike	Lead Programmer	NSOF, Room 1376	Edward.M.Baker@noaa.gov	1
066n	Shugrue, Mary	PSS2 Project Manager	NSOF, Room 1357	Mary.Shugrue@noaa.gov	1
069n	Dorsey, Warren	OSD	NSOF, Room 1140	Warren.Dorsey@noaa.gov	1
070n	Plott, Bruce	OSPO IT Administrator	NSOF, Room 1607	Bruce.Plott@noaa.gov	1
076n	McKenzie, Keith	OSD/GOES Project Mgr & OSTM/Jason-2 BS COR	NSOF, Room 1143	Keith.Mckenzie@noaa.gov	1
080n	Chen, Sam	GOES Engineer	NSOF, Room 1589	Sam.M.Chen@noaa.gov	1
085n	Atkins, Steve	WCDAS SPS Manager	DOC, NOAA WCDAS, Wallops, VA	Steven.M.Atkins@noaa.gov	1
086n	Abadia, Antonio	GOES Bus Engineer	NSOF, Room 1583	Antonio.Abadia@noaa.gov	1
089n	Weinreb, Michael	General Dynamics	NSOF, Room 1378	Michael.Weinreb@noaa.gov	1
094e	Adamson, Steve {Key}	OSD/OSPO CMO (eCopy)	NSOF, Room 1131	N/A	1
096n	Hegele, Lin	PM&RSS Project Manager	NSOF, Room 1148	Lin.Hegele@noaa.gov	1
098	DCO Distribution {Key}	NOAA/NESDIS/OSD DCO	NSOF Library, Room 1006	N/A	1
098e	DCO Distribution {Key}	NOAA/NESDIS/OSD DCO (eCopy)	NSOF Library, Room 1006	N/A	1
099n	Al-Mallah, Bashar	Deputy PM&RSS Project Manager	NSOF, Room 1153	bashar.al-mallah@noaa.gov	1
101n	Yu, Pong	System Engineer	NSOF, Room 1142	Pong.Yu@noaa.gov	1
116n	O'Neal, Jim	Aerospace	NSOF, Room 1224	jim.oneal@noaa.gov	1
118n	Miglin, Matt K.	Technical Writer	NSOF, Room 1667	Matt.K.Miglin@noaa.gov	1
121n	Endicter, Jess	EMOSS GOES Lead (Contractor)	NSOF, Room 1318	jess.w.endicter@noaa.gov	1
129n	Stathoplos, Linda	Deputy Chief, OSPO/Mission Operations Division	NSOF, Room 1434	Linda.Stathoplos@noaa.gov	1
131n	Kelly, Kathy	OSPO Director	NSOF, Room 1605	Kathy.Kelly@noaa.gov	1
140n	McClinton, Art	NOAA/Noblis - NOAA Liaison	NSOF, Room 1233	Art.McClinton@noaa.gov	1
157n	Serafino, George N.	Chief, OSD Ground Systems Division	NSOF, Room 1434	George.Serafino@noaa.gov	1
177e	c/o Michelle Settles {Key}	OSPO/EMOSS Technical Library POC (eCopy)	NSOF, Room 1314	N/A	1
197n	Mehta, Ajay	JPSS Deputy Director (Acting)	NOAA JPSS Office	ajay.mehta@noaa.gov	1
229e	Moore, Thomas	OSPO/EMOSS Ground System Engineer (eCopy)	NSOF, Room 1334	N/A	1

Loc #	Person	Location Title	Address	Email Address	Copies
293n	Dalal, Manan	GOES PSS SW	NSOF, Room 1346	Manan.Dalal@noaa.gov	1
297	5th Floor Systems Lab {Key} Attn: D. Robinson	5th Floor Systems Lab	5th Floor Systems Lab	N/A	1
307n	Seifert, Banashree	ISI	Lanham, MD	bseifert@integ.com	1
323n	Han, Dejiang	Physical Scientist	NSOF, Room 1460	Dejiang.Han@noaa.gov	1
389n	Perry, Tony	SOCC Maintenance Shop	NSOF, Room 4001	Tony.Perry@noaa.gov	1
551n	Li, Zhenping	SGT	NSOF, Room 1336	Zhenping.Li@noaa.gov	1
553n	DeFoor, Tom	NOAA	DSRC, Mail Code W/NP9 325 Broadway, Boulder, CO 80305	tom.defoor@noaa.gov	1

Total eNotifications	38	**Total CD Copies**	10	**Total Paper Copies**	11	**Total Copies**	59