An Enterprise Backup Solution for the Ocean Surface Topography Mission (OSTM)/Jason-2 Ground System

Abhishek Agarwal[1], Rachid Dahmani[1], Shahram Tehranian[1], Keith McKenzie[2]

[1]Avaya Government Solutions
[2]National Environmental Satellite, Data, and Information Service (NESDIS)

Abstract – The Ocean Surface Topography Mission (OSTM) is a joint effort by four organizations to measure sea surface height using a radar altimeter mounted on a low-earth orbiting satellite called Jason-2. The four mission participants include National Oceanic and Atmospheric Administration (NOAA), National Aeronautics and Space Administration (NASA), Centre National d'Etudes Spatiales (CNES) from France, and European Meteorological Satellite Organisation (EUMETSAT). Under the OSTM program, NOAA is responsible for supporting its satellite ground segment during its routine operational phases and to acquire, produce, and distribute geophysical data in a manner beneficial to all interested users.

The OSTM/Jason-2 Backup System uses Commercial-off-the-shelf (COTS) hardware and software with built-in redundancy that provides high reliability and availability. The solution provides backup and recovery of both the application data and the operating system, including bare metal recovery. The OSTM/Jason-2 Backup System is designed to provide Disaster Recovery (DR); support automatic backup and restores; provide compatibility with backup software for other missions; meet IT Security requirements for DR and Continuity of Operations (COOP); provide centralized repository for backups and restores with minimal interference with the existing operational network traffic; and support removable media transfers for offsite storage.

The OSTM/Jason-2 Backup System is deployed at the NOAA Satellite Operations Facility (NSOF) as all major Jason-2 ground system components are located at this facility. This paper describes the design, development, testing, deployment, and transition to operation of the OSTM/Jason-2 Backup System at NSOF.

Index Terms – Jason-2, Satellite Ground Systems, Data Backup and Disaster Recovery (DR), Symantec NetBackup, Bare Metal Restore

I. INTRODUCTION

The Ocean Surface Topography Mission (OSTM) is part of the operational polar satellite systems operated by NOAA National Environmental Satellite, Data, and Information Service (NESDIS). It is a joint effort by NOAA, National Aeronautics and Space Administration (NASA), European Organization for the Exploitation of Meteorological Satellites (EUMETSAT), and Centre National d'Etudes Spatiales (CNES). NOAA operates the Jason-2 satellite to collect data for use by all four partners as well as other users.

The Jason-2 satellite has several onboard instruments that provide information on the topography of the surface of the ocean. The main instrument is a radar altimeter that maps sea surface height in order to determine global sea-level rise, ocean currents, wind speed, ocean circulation, and other ocean-related altimetry products.

The Jason-2 satellite is operated via several ground system hardware and software components installed at several locations. These sites are the Satellite Operations Control Center (SOCC), located in Suitland, Maryland; the Command and Data Acquisition Stations (CDAS) located in Wallops, Virginia, and Fairbanks, Alaska; the Environmental Satellite Data Processing Center (ESPC) located in Suitland, Maryland; the National Oceanographic Data Center in Silver Spring, Maryland, and the Comprehensive Large Array-data Stewardship System (CLASS) located in Suitland, Maryland. These sites are linked via a secure communications infrastructure for data transfer and communication. The main Jason-2 components at NOAA locations are:

- Jason-2 Telemetry Command and Control Subsystem (J2TCCS);
- Jason-2 Sequencer (J2SEQ);
- NOAAServer;
- Consultative Committee for Space Data Systems (CCSDS) Internet Protocol (IP) Gateways (CIGs);
- Engineering Tools Server (ETS);
- FileManager;
- Common Network Clients (CNCs);
- WebServer;
- Data Remote Processing Personal Computer (DRPPC); and
- Telemetry (TM) Analyzer-Near Real Time (NRT) (TM-NRT) Server.

The Jason-2 ground system's primary functions are to command and control the Jason-2 satellite, receive telemetry data, generate Near Real-Time (NRT) payload data products, archive telemetry and science products, and distribute data to the four partners and other users around the world. A secure and firewall-protected Data Communications Network (DCN) infrastructure is used for communications, command, telemetry, and data products transfer among all sites.

Jason-2 ground system components need to operate continuously to provide data for its members and other data users. To safeguard this data and ensure continuity of operations, a Jason-2 Backup System was developed. It has the capabilities to manually or automatically, through scheduling, back up all data files, system files, and operating systems on any of the Jason-2 ground system components. The main advantages of having a backup system are:

- Provide a backup and recovery solution for the Jason-2 ground system components;
- Provide storage for online backup and restores;
- Meet NOAA Information Technology (IT) security and Continuity of Operations (COOP) requirements; and
- Provide scalable and adaptable solution to allow for future growth and expandability.

The Jason-2 Backup System will provide capabilities for systems administrators to schedule automated system backups from a centralized location. System administrators will be able to perform the following activities on the backup system:

- Perform remote backup and restore of data from OSTM/Jason-2 components;
- Run pre-determined automated backup of complete systems, data, and applications as needed;
- Support selective restore of data as needed;
- Support offline data migration to tapes for long-term archival;
- Provide short-term data backups on a Storage Area Network (SAN) to facilitate faster data retrieval;
- Provide a selective restore of application data; and
- Provide the capability to backup and restore simultaneously from multiple servers using online backup.

The Jason-2 backup system provides data protection for a variety of platforms, including Unix, Linux, and Windows operating systems. The user can perform manual backups or set up periodic or calendar-based backup schedules to perform automatic, unattended backups for any client on the Jason-2 network. There are three main types of backups: full backups where all files on a client are backed up; incremental backups where only files that have changed since the last full backup are included; and archive backups where files are backed up and then deleted from the local disk if the backup is successful. Backups and restores can be performed remotely from a backup server or locally from individual backup clients.

During a backup or archive operation, the client sends backup data across the network to the backup server, which performs the type of storage that is specified in a configured backup policy. During a restore, users can browse and then select the files and directories to restore. The backup server finds the selected files and directories and restores them to a specified location on the client's local disk.

II. SYSTEM ARCHITECTURE

Hardware Architecture

The Jason-2 Backup System hardware is comprised of hardware components that can protect clients running on Unix, Linux, and Windows operating systems. It includes servers that host the backup software and backup policies and schedules, and the devices used for both short-term and long-term data storage. The hardware architecture of the Jason-2 Backup System is illustrated in Figure 1. The main components are:

- One NetBackup master server used for setting up backup policies and schedules, adding backup clients, backing up clients, and booting up Windows systems for recovery after a disaster failure;
- One Linux boot server used for booting up Unix/Linux clients in case of disaster recovery;
- One Storage Area Network array, with dual-controllers, used for short-term storage of data and system files;
- One tape Library used for long-term storage of data and system files; and
- One KVM switch and rack-mount keyboard and monitor for locally accessing and operating the system.

All hardware components are connected to the core switch for network configuration, communication, and data transfer. The backup server is also connected to the SAN and the Tape Library for transfer of data and system files to the SAN for short-term storage, and to the Tape Library for long-term storage.

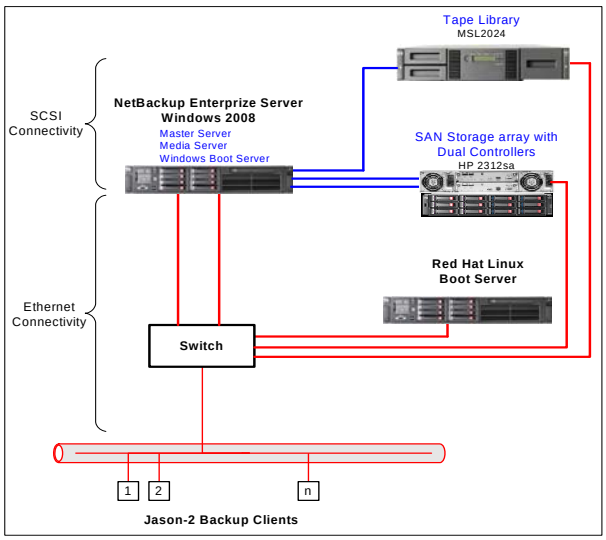

Figure 1. Jason-2 Backup System Hardware Configuration.

Software Architecture

The Jason-2 Backup System software is based on Symantec NetBackup Software 7.0 (Reference 2) which includes NetBackup Server software installed on the backup server, and NetBackup Client software installed on client machines. The NetBackup client software is also installed on the NetBackup server so that it can also be included in backups and restores. The NetBackup server, which is also a media server, is used to administer all backup functions on the server itself, and all other clients that have the NetBackup client software already installed and configured. It also manages the storage devices (SAN and Tape Library), and hosts and manages backup policies and schedules.

NetBackup can accommodate a NetBackup master server and one or more media servers under the control of the master server. The master server is responsible for selecting media and devices for NetBackup and managing backups, archives, and restores. It also contains the NetBackup internal databases that contain information about backups and system configuration. A media server can provide additional storage by allowing NetBackup to use the storage devices that are attached to it, and can also handle some of the network load, which improve the performance of the backup system. In the current Jason-2 Backup System, the master server is also the media server.

NetBackup functions are usually performed remotely from the NetBackup server. However, they can also be performed through line commands on Unix/Linux platforms. These procedures are described in detail in the NetBackup documentation (Reference 3 and Reference 4).

NetBackup provides a flexible and complete data protection solution for systems running Unix, Linux, and Windows operating systems. Administrators can set up periodic or calendar-based schedules to perform automatic and unattended backups for clients on a network. For example, backups can be carefully scheduled to optimize network traffic during off-peak hours or at specific timed events. The main functional block diagram of the Jason-2 Backup System is shown in Figure 2. All components are connected to the main Ethernet network for data transfer, communication, and network configuration. The SAN and Tape Library are used for short-term and long-term storage, respectively. Backup data is first transferred from the clients to the SAN via the NetBackup master server, as indicated by the dotted line. From the SAN it is then transferred to the Tape Library for long-term storage, as indicated by the dashed line. The figure shows some of the Jason-2 clients. Other clients can be added as needed.

To protect Jason-2 clients against total disaster failure, NetBackup client systems can be protected by backing them up using a policy that is configured for Bare Metal Restore (BMR) protection (Reference 5). In case of total failure, BMR rebuilds protected clients and restores the original files. BMR automates system recovery by restoring the operating system, system configuration, and all system and data files. BMR requires a boot server to provide the environment that is required to rebuild a protected client. A separate boot server is required for each type of operating system. Unix/Linux systems require a Linux boot server and Windows systems require a Windows boot server. To be able to create the resources that are needed to protect and rebuild BMR-protected clients, BMR boot server software needs to be installed.

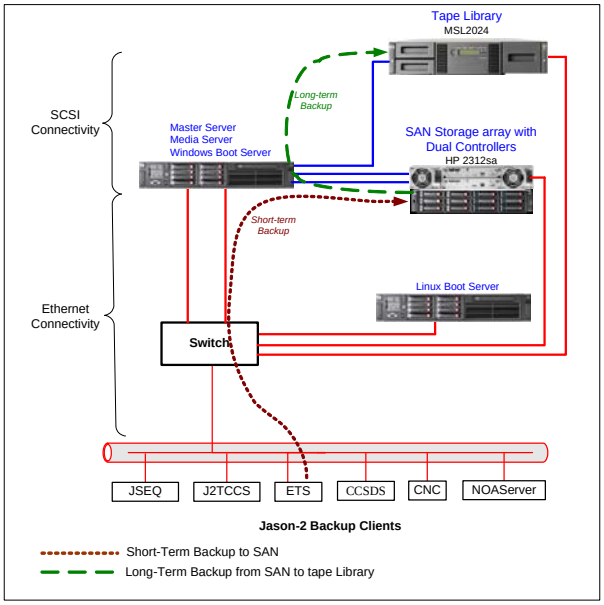

Figure 2. Jason-2 Backup System Data Flow Diagram.

III. IMPLEMENTATION

The Jason-2 Backup System hardware components are all installed on a single rack. The diagram in Figure 3 illustrates the location of all backup system components and their connection to the core Ethernet switch. Setting up the Jason-2 Backup System involves the installation of the hardware equipment on the rack

followed by the installation and configuration of the software. The installation and configuration of NetBackup software involves the following main steps:

- Installing Windows server 2008 Enterprise on the master server;
- Installing NetBackup Server software on the master server;
- Configuring NetBackup Server software on the master server;
- Installing NetBackup Client Software on Unix and Linux clients;
- Configuring Unix and Linux clients;
- Installing NetBackup Client Software on Windows clients;
- Configuring Windows clients; and
- Installing Bare Metal Restore software.

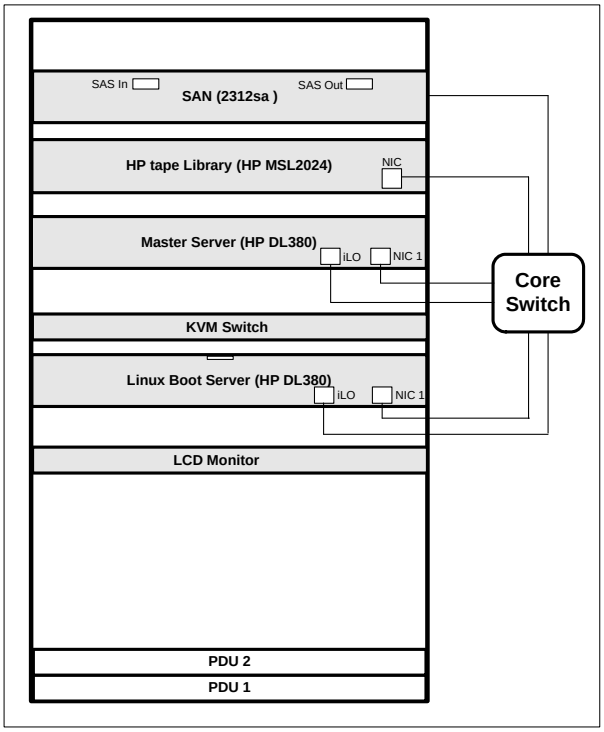

Figure 3. Jason-2 Backup System Layout Diagram.

IV. CONCLUSION AND FUTURE WORK

A backup system has been developed to protect Jason-2 ground system components against disaster failure. It has been fully and successfully tested and transitioned to operation at NSOF. The backup system provides several types of backups, such as incremental, synthetic, and full backups, as well as restore of backed-up data. It also protects clients against total loss through a bare metal restore utility that restores all necessary data, configuration and system files, and operating systems used to bring an affected machine back into operation.

The Jason-2 Backup System allows for future expandability through an increase in the size of the Storage Area Network (SAN) and the Tape Library as additional clients are added as part of existing or new missions.

REFERENCES

[1] Polar Satellite Ground Segment, NOAA Polar Ground Segment Concept of Operations for the Ocean Surface Topography Mission (OSTM), (P258), Document Number NOAA-Polar-OSTM/OSD-2006-0005R0UD0, March 2008.
[2] Symantec NetBackup Administrator's Guide, Volume I, Windows, Release 7.0, 2009.
[3] Symantec NetBackup Administrator's Guide, Volume I, UNIX and Linux, Release 7.0, 2009.
[4] Symantec NetBackup Administrator's Guide, Volume II, UNIX and Linux, Release 7.0, 2009.
[5] VERITAS NetBackup Bare Metal Restore 6.0, System Administrator’s Guide for Unix, Linux, and Windows, September 2005.